CLERK'S COPY.

136

TRANSCRIPT OF RECORD

Supreme Court of the United States

OCTOBER TERM, ~~1929~~ 1930

No. ~~520~~ 19

LEKTOPHONE CORPORATION, PETITIONER,

vs.

THE ROLA COMPANY

ON WRIT OF CERTIORARI TO THE UNITED STATES CIRCUIT COURT OF APPEALS FOR THE NINTH CIRCUIT

PETITION FOR CERTIORARI FILED DECEMBER 16, 1929

CERTIORARI GRANTED JANUARY 27, 1930

(34,651)

(34,651)

SUPREME COURT OF THE UNITED STATES

OCTOBER TERM, 1929

No. 520

LEKTOPHONE CORPORATION, PETITIONER,

vs.

THE ROLA COMPANY

ON WRIT OF CERTIORARI TO THE UNITED STATES CIRCUIT COURT OF APPEALS FOR THE NINTH CIRCUIT

INDEX

	Original	Print
Record from district court of the United States, Northern California	1	1
Bill of complaint	1	1
Answer	8	5
Amendment to answer	15	9
Amendment to answer	19	12
Opinion, Bourquin, J.	21	13
Final decree	31	20
Docket entries	32	21
Statement of evidence	34	22
Testimony of Louis A. Hazeltine	35	22
Stipulation re patents	54	35
Stipulation re depositions	55	36
Deposition of Edward K. MacEwan	56	36
Albert C. Diehl	62	41
Edward W. MacEwan (recalled)	64	42
Harry O. Sooy	65	43

JUDD & DETWEILER (INC.), PRINTERS, WASHINGTON, D. C., MARCH 4, 1930

	Original	Print
Testimony of Henry Stevens Tenny	66	44
Peter L. Jensen	100	67
E. G. Danielson	103	70
Marcus C. Hopkins	107	72
Clair L. Farrand	120	81
Schedule "A"—List of patents	130	88
Testimony of H. J. Hasbrouck	133	90
Louis A. Hazeltine (recalled)	134	91
Clair L. Farrand (recalled)	150	102
Petition for appeal	158	108
Assignments of error	159	108
Order allowing appeal	161	109
Bond on appeal (omitted in printing)	162	
Stipulation re transcript of record	163	110
Clerk's certificate (omitted in printing)	165	
Citation and service (omitted in printing)	166	
Proceedings in United States circuit court of appeals, ninth circuit	171	112
Argument and submission (omitted in printing)	171	
Order directing filing of opinion and decree	172	112
Opinion, Wilbur, J.	172	112
Decree	203	132
Order staying mandate	204	133
Clerk's certificate (omitted in printing)	205	
Plaintiff's Exhibit No. 1—Letters patent No. 1,271,529, issued to Marcus C. Hopkins for acoustic device	1	133
Plaintiff's Exhibit No. 2—Letters patent No. 1,271,527, issued to Marcus C. Hopkins for sound regenerating machine	7	141
Plaintiff's Exhibit No. 4—Drawings showing front and sectional view of Rola speaker	21	159
Plaintiff's Exhibit No. 5—Drawing showing perspective view of electro-magnetic actuating device of Rola speaker, showing lever mechanism from armature to cone	25	159
Plaintiff's Exhibit No. 6—File-wrapper and contents and drawing in re letters patent No. 1,271,529, issued to Marcus C. Hopkins for improvement in acoustic device	26	160
Plaintiff's Exhibit No. 7—File-wrapper, contents, and drawings in re letters patent No. 1,271,527, issued to Marcus C. Hopkins for improvement in sound-regenerating machine	68	192
Plaintiff's Exhibit No. 25—Drawing	219	306
Defendant's Exhibit No. 9—Copies of patents set up in answer	220	306
United States patents:		
216,051, June 3, 1879, Maxwell	222	308
252,024, January 10, 1882, Farrington	225	311
254,642, March 7, 1882, Hale	228	314
599,867, March 1, 1898, Rogers	231	319
654,360, July 24, 1900, Schopf	234	323
674,575, May 21, 1901, Duwelius	236	324

	Original	Print
822,024, May 29, 1906, Shanks	243	330
857,209, June 18, 1907, Smith	249	338
890,142, June 9, 1908, Kraemer	253	341
963,362, July 5, 1910, Edison	256	345
986,477, March 14, 1911, Lumiere	260	352
1,036,529, August 20, 1912, Lumiere	271	363
1,064,062, June 10, 1913, English	283	378
1,096,676, May 12, 1914, Brown	289	387
1,180,401, April 25, 1916, Johnson	293	393
1,182,078, May 9, 1916, Elfering	302	403
1,192,289, July 25, 1916, English	305	406
British patents:		
9,712, 1898, Lodge	310	314
9,418, 1899, Stroh	318	423
3,393, 1901, Stroh	325	428
15,060, 1904, Simon et al	328	430
8,011, 1906, Szek et al	331	433
8,833, 1907, Hough	334	435
1,194, 1908, Curteis	337	437
17,827, 1909, Zappert	343	445
26,738, 1909, Rosenthal	346	447
15,675, 1910, Lyons	349	449
29,833, 1910, Brown	352	452
1,157, 1911, Brown	357	459
French patents:		
127,180, 1878, Ader	364	465
"Talking Machine News," title page and pages 243 and 244	372	470
Defendant's Exhibit No. 12—Letters patent and contents No. 338,660, issued to John E. Dann and John Lapp for telephone transmitter	375	470
Defendant's Exhibit No. 19—Letters patent and contents No. 1,389,632, issued to William H. Davis and Frederick E. Joss for acoustic diaphragm	380	475
Defendant's Exhibit No. 34—Photograph	383	480
Order allowing certiorari	386	480

[fols. a-c-e] [CLERK'S NOTE.—When deemed likely to be of an important nature, errors or doubtful matters appearing in the original certified record are printed literally in italic; and, likewise, cancelled matter appearing in the original certified record is printed and cancelled herein accordingly. When possible, an omission from the text is indicated by printing in italic the two words between which the omission seems to occur.]

[fol. 1]

IN UNITED STATES DISTRICT COURT, NORTHERN DISTRICT OF CALIFORNIA, SOUTHERN DIVISION

Equity. No. 1726

LEKTOPHONE CORPORATION, Plaintiff,

vs.

THE ROLA COMPANY, Defendant

BILL OF COMPLAINT—Filed July 13, 1926

The plaintiff, Lektophone Corporation, for its bill of complaint alleges:

1. That it is a corporation duly organized and existing under the laws of the State of Delaware, and is a resident and inhabitant of said state, having its principal office and [fol. 2] place of business in Jersey City, State of New Jersey, and on information and belief that defendant, The Rola Company, is a corporation duly organized and existing under the laws of the State of Washington, and is a resident and inhabitant of said state, and has a regular and established place of business at 45th and Hollis Streets, Emeryville, California.

2. That the jurisdiction of the court depends upon the patent laws of the United States.

3. That on the 14th day of July, 1913, Marcus C. Hopkins was the true, original and first inventor of certain new and useful improvements in "Sound Regenerating Machines," not known or used by others in this country before his invention or discovery thereof, and not patented or described

in any printed publication in this or any foreign country before his invention or discovery thereof, or more than two years prior to his hereinafter recited application for letters patent therefor, and not in public use or on sale in this country for more than two years prior to his said application, and for which no application for letters patents in any country foreign to the United States of America had been filed more than twelve months prior to the filing of the application in this country, and which had not been abandoned; that being entitled to a patent for said improvements under the provisions of the statutes of the United States then in force, the said Marcus C. Hopkins did, on the 14th day of [fol. 3] July, 1913, file in the Patent Office of the United States an application for letters patent on said invention; that said application was duly assigned to the plaintiff, Lektophone Corporation, before the issuance of said letters patent by mesne assignments duly recorded in the Patent Office; that thereafter, to wit, on the 2d day of July, 1918, all requirements of the statutes then in force having been complied with, letters patent of the United States for said invention signed, sealed and executed in due form of law were duly issued to the said Lektophone Corporation, as assignee of the entire right, title and interest therein and thereto; that the letters patent so issued were numbered 1,271,527, and said letters patent or a duly certified copy thereof is ready to be produced as this Court shall direct.

4. That on the 14th day of July, 1913, Marcus C. Hopkins, was the true, original and first inventor of certain new and useful improvements in "Acoustic Device," not known or used by others in this country before his invention or discovery thereof, and not patented or described in any printed publication in this or any foreign country before his invention or discovery thereof, or more than two years prior to his hereinafter recited application for letters patent therefor, and not in public use or on sale in this country for more than two years prior to his said application, and for which no application for letters patent in any country foreign to the United States of America had been filed more than twelve months prior to the filing of the [fol. 4] application in this country, and which had not been abandoned; that being entitled to a patent for said improvements under the provisions of the statutes of the United States then in force, the said Marcus C. Hopkins did, on the

14th day of July, 1913, file in the Patent Office of the United States an application for letters patent on said invention, which application was subsequently divided and a divisional application filed on the 17th day of April, 1918; that said divisional application was duly assigned to the plaintiff, Lektophone Corporation, before the issuance of said letters patent by mesne assignments duly recorded in the Patent Office; that thereafter, to wit, on the 2d day of July, 1918, all of the requirements of the statutes then in force having been complied with, letters patent of the United States for said invention, signed, sealed and executed in due form of law were duly issued to the said Lektophone Corporation, as assignee of the entire right, title and interest therein and thereto; that the letters patent so issued were numbered 1,271,529 and said letters patent or a duly certified copy thereof is ready to be produced as this Court shall direct.

5. That the plaintiff is still the owner of all the right, title and interest in and to the said inventions and in and to the said letters patent No. 1,271,527 and No. 1,271,529.

6. That said inventions patented as aforesaid are of great value and utility to plaintiff and to the public generally; that the plaintiff and its licensees, since the dates of said [fol. 5] inventions, have caused to be manufactured and sold acoustic devices embodying the inventions of letters patent Nos. 1,271,527 and 1,271,529, and plaintiff has expended large sums of money in causing the said inventions to be developed and has built up a large and profitable business for the exploitation of said acoustic devices, so that said inventions and patent rights have been and are of great utility and great value to the plaintiff and its licensees, and, but for the unlawful acts of the defendants herein complained of, would have been of greater value and profit to them.

7. That the acoustic devices caused to be manufactured and sold by the plaintiff and its licensees, embodying the inventions of the aforesaid letters patent are duly marked "Patented" with the date of said letters patent, all in the manner prescribed by the statutes of the United States, and plaintiff's ownership of said inventions and letters patent has been widely recognized and acquiesced in by the public and by the trade.

8. That well knowing the premises and with intent to injure and defraud the plaintiff the defendant has, since the grant of said letters patent Nos, 1,271,527 and 1,271,529, and prior to the execution of this bill of complaint, infringed upon said letters patent, and each of them, by making and selling loudspeakers embodying the invention of each and both of said letters patent, and threatens to continue so to infringe; and as an instance of the said infringement, the plaintiff alleges that the defendant has, since the [fol. 6] grant of said letters patent Nos. 1,271,527 and 1,271,529, and prior to the execution of this bill of complaint, manufactured and sold and is now manufacturing and offering for sale at its place of business in Emeryville, California, so-called "Recreator" loudspeakers embodying the invention of claims 29 and 30 of letters patent No. 1,271,527 and claims 1 to 8 inclusive of letters patent No. 1,271,529.

Wherefore plaintiff prays:

1. For an injunction, and a preliminary injunction pending this suit, prohibiting the defendant The Rola Company, its agents and employees from directly or indirectly making or causing to be made, using or causing to be used, selling or causing to be sold acoustic devices embodying the invention of either or both of said letters patent Nos. 1,271,527 and 1,271,529 and from infringing upon or violating the rights of the plaintiff in said letters patent in any way whatsoever.

2. For costs and an accounting of profits and damages, and that upon rendering a decree herein, the actual damages be trebled in view of the wilful infringement by the defendant.

3. For such other and further relief as the circumstances of the case may require.

Lektophone Corporation, by (Sgd.) Charles H. Winship, Jr., Secretary. Wm. K. White, Chas. M. Fryer, Solicitors for Plaintiff. (Sgd.) William H. Davis, of Counsel.

[fol. 7] *Duly sworn to by Charles H. Winship, Jr. Jurat omitted in printing.*

[File endorsement omitted.]

[fol. 8] IN UNITED STATES DISTRICT COURT

ANSWER TO BILL OF COMPLAINT—Filed Aug. 19, 1926

Comes now the above-named defendant, The Rola Company, and answering plaintiff's bill of complaint herein, admits, alleges and denies as follows:

I

That defendant has no knowledge or information as to whether plaintiff corporation is duly organized and/or existing under the laws of the State of Delaware and is a resident and inhabitant of said state, and therefore denies said allegation; defendant admits that the defendant company is a corporation duly organized and existing under and by virtue of the laws of the State of Washington, and has a legal and established place of business at 45th and Hollis Streets, Emeryville, California.

II

Admits that the jurisdiction of the court depends upon the Patent Laws of the United States.

III

That defendant has no knowledge or information as to allegations contained in Paragraph III of the bill of complaint herein, and placing its denial of said allegations on that ground, denies that on the 14th day of July, 1913, Marcus C. Hopkins was the true, original and first inventor of certain new and useful improvements in "Sound Regenerating Machines," not known or used by others in this country before his invention or discovery thereof, and not [fol. 9] patented or described in any printed publication in this or any foreign country before his invention or discovery thereof, or more than two years prior to his hereinafter recited application for letters patent therefor, and not in public use or on sale in this country for more than two years prior to his said application, and for which no application for letters patent in any country foreign to the United States of America had been filed more than twelve months prior to the filing of the application in this country,

and which had not been abandoned; and upon said ground denies that said Hopkins was entitled to a patent for said improvements under the provisions of the statutes of the United States then in force, or that the said Marcus C. Hopkins did, on the 14th day of July, 1913, file in the Patent Office of the United States an application for letters patent on said invention, or that said application was duly assigned to the plaintiff, Lektophone Corporation, before the issuance of said letters patent by mesne assignments duly recorded in the Patent Office; or that thereafter, to wit, on the 2d day of July, 1918, all requirements of the statutes then in force having been complied with, letters patent of the United States for said invention signed, sealed and executed in due form of law were duly issued to the said Lektophone Corporation, as assignee of the entire right, title and interest therein and thereto; or that the letters patent so issued were numbered 1,271,527.

That defendant has no knowledge or information as to the allegations contained in Paragraph IV of the bill of com- [fol. 10] plaint herein and placing its denial of said allegations on that ground, denies that on the 14th day of July, 1913, Marcus C. Hopkins was the true, original and first inventor of certain new and useful improvements in "Accoustic Device," not known or used by others in this country before his invention or discovery thereof, and not patented or described in any printed publication in this or any foreign country before his invention or discovery thereof, or more than two years prior to his hereinbefore recited application for letters patent therefor, and not in public use or on sale in this country for more than two years prior to his application, and for which no application for letters patent in any country foreign to the United States of America had been filed more than twelve months prior to the filing of the application in this country, and which had not been abandoned; and upon said ground denies that said Marcus C. Hopkins was entitled to a patent for said improvements under the provisions of the statutes of the United States then in force, or that the said Marcus C. Hopkins did, on the 14th day of July, 1913, file in the Patent Office of the United States an application for letters patent on said invention, which application was subsequently divided and a divisional application filed on the

17th day of April, 1918; or that said individual application was duly assigned to the plaintiff, Lektophone Corporation, before the issuance of said letters patent by mesne assignments duly recorded in the Patent Office; or that thereafter, [fol. 11] to wit, on the 2d day of July, 1918, all of the requirements of the statutes then in force having been complied with, letters patent of the United States for said invention, signed, sealed and executed in due form of law were duly issued to the said Lektophone Corporation, as assignee of the entire right, title and interest therein and thereto; or that the letters patent so issued were numbered 1,271,529.

V

That defendant has no knowledge or information as to allegations contained in Paragraph V of the bill of complaint herein, and placing its denial of said allegations on that ground, denies that the plaintiff is still the owner of all the right, title and interest in and to the said inventions and in and to the said letters patent No. 1,271,527 and No. 1,271,529.

VI

That defendant has no knowledge or information as to allegations contained in Paragraph VI of the bill of complaint herein, and placing its denial of said allegations on that ground, denies that the said inventions patented as aforesaid are of great value and utility to plaintiff and to the public generally; that the plaintiff and its licensees, since the date of said inventions, have caused to be manufactured and sold accoustic devices embodying the inventions of letters patent Nos. 1,271,527 and 1,271,529, and plaintiff has expended large sums of money in causing the said inventions to be developed and has built up a large and profitable [fol. 12] business for the exploitation of said accoustic devices, so that said inventions and patent rights have been and are of great utility and great value to the plaintiff and its licensees, and, but for the unlawful acts of the defendant herein complained of, would have been of great value and profit to them.

VII

That defendant has no knowledge or information as to allegations contained in Paragraph VII of the bill of com-

plaint herein, and placing its denial of said allegations on that ground, denies that the accoustic devices caused to be manufactured and sold by the plaintiff and its licensees, embodying the inventions of the aforesaid letters patent, are duly marked "Patented," with the date of said letters patent, all in the manner prescribed by the statutes of the United States, and plaintiff's ownership of said inventions and letters patent has been widely recognized and acquiesced in by the public and by the trade.

VIII

Defendant corporation denies that with intent to injure and/or defraud the plaintiff, or with any other intent or at all, the defendant has, since the granting of said claimed letters patent No. 1,271,527 and No. 1,271,529, and prior to the execution of the bill of complaint herein, or at any other time or at all, infringed upon said letters patent or said claimed letters patent, and/or each of them, by making and selling loudspeakers, embodying the alleged invention, or [fol. 13] any invention, of each and/or both of said claimed letters patent, or that the defendant corporation has otherwise, or at all, infringed upon said claimed letters patent, and/or threatens to infringe upon said claimed letters patent; and denies that the defendant corporation has, since the granting of said claimed letters patent No. 1,271,527 and No. 1,271,529, and prior to the execution of this bill of complaint, or at any other time, or at all, manufactured and/or sold and/or is now manufacturing and/or offering for sale, at its place of business in Emeryville, California, or elsewhere, or at all, so-called Recreator Loud Speakers, embodying the invention of claims No. 1 to No. 8, inclusive, and letters patent No. 1,271,527, and claims No. 1 to No. 8, inclusive, of letters patent No. 1,271,529, and denies that said defendant corporation has, in any manner, or at all, infringed upon, or threatened to infringe upon, any of said claimed letters patent, or that said defendant is engaged in manufacturing and/or selling or offering for sale, any loudspeakers of any kind or description whatsoever, embodying a part of portion of the claims No. 29 and No. 30 and No. 1 to No. 8, inclusive, of claimed letters patent No. 1,271,527 and No. 1,271,529, respectively.

Wherefore, defendant prays judgment that (1) bill of complaint herein be dismissed and that the plaintiff take nothing and that defendant be hence dismissed with its costs and disbursements herein expended; (2) and for such [fol. 14] other and further relief as to the Court may seem just and equitable.

Gavin McNab, Nat Schmulowitz, C. M. Booth, Attorneys for Defendant Corporation.

Duly sworn to by H. L. Tenny. Jurat omitted in printing.

[File endorsement omitted.]

[fol. 15] In United States District Court

Amendment to Answer Adding New Paragraphs IX, X and XI—Filed Nov. 18, 1926

Now comes the defendant above named, by its counsel, and by leave of Court first had and obtained, files the following amendment to its answer:

Page 6, after line 1, insert the following new paragraphs:

IX

And for a further and particular defense defendant is informed and believes, and so states the fact to be, that the said alleged inventions of the said patents in suit, and each of them, and each and every claim there, never possessed novelty or utility or the quality of invention, and that said patents and each of them, are invalid in all respects.

X

Defendant avers upon information and belief:

(a) That the alleged inventions set forth and sought to be claimed in said letters patent in suit, and each of them, has been patented and described in printed publications prior to the supposed invention or inventions, or discovery or discoveries thereof by the said patentee, as set out in Paragraph XI hereof.

(b) That the said Marcus C. Hopkins was not the original, or first, or any inventor or discoverer of any material or substantial part of the thing or things patented in said letters patent in suit and/or either of them.

[fol. 16] (c) That the alleged invention or inventions of the said patents in suit, and each of them, and all material and substantial parts thereof had been in public use or on sale in this country since prior to the alleged invention or inventions thereof by the said Marcus C. Hopkins and for more than two years before the filing of the respective applications for said letters patent by said Marcus C. Hopkins, and of each of them, as set out in Paragraph XI hereof.

(d) That at and before the time of the alleged invention or inventions of the Marcus C. Hopkins the said invention or inventions described and/or claimed in his said letters patent in suit, and each of them, and every material and substantial part thereof, had been patented and described in printed publications and known and used in this country, as alleged in Paragraph XI hereof; and what is described and claimed in said Marcus C. Hopkins' behalf in the aforesaid patents in suit, and each of them, did not, in view of the prior art, involve patentable invention, and that said letters patent, and each of them, are, therefore, invalid.

(e) That the said Marcus C. Hopkins surreptitiously and/or unjustly obtained said letters patent, and each of them, for that which was, in fact, originated by others, who had used or who were using reasonable diligence in adapting and perfecting the same and putting the same into use, to wit, the patentees, prior users and individuals mentioned in Paragraph XI hereof.

[fol. 17] XI

Defendant here gives notice that in support of the foregoing defenses it will introduce at the trial the following patents, printed publications and proofs of prior knowledge, invention and use, and such additional patents, printed publications and proofs of prior knowledge, invention and use as it may hereinafter discover, and when discovered it prays leave to set forth by amendment to this answer, to wit:

United States Letters Patent

Number	Date	Patentee
216,051	June 3, 1879	Maxwell
252,024	Jan. 10, 1882	Farrington
254,642	March 7, 1882	Hale
599,867	March 1, 1898	Rogers
654,360	July 24, 1900	Schopf
674,575	May 21, 1901	Duwelius
822,024	May 29, 1906	Shanks
857,209	June 18, 1907	Smith
890,142	June 9, 1908	Kraemer
963,362	July 5, 1910	Edison
986,477	Mar. 14, 1911	Lumiere
1,036,529	Aug. 20, 1912	Lumiere
1,064,062	June 10, 1913	English
1,096,676	May 12, 1914	Brown
1,180,401	Apr. 25, 1916	Johnson
1,182,078	May 9, 1916	Elfering
1,192,289	July 25, 1916	English

[fol. 18]

British Letters Patent

Number	Date	Patentee
3,393	1901	Stroh
15,060	1904	Simon, et al.
8,011	1906	Szek, et al.
8,833	Apr. 16, 1907	Hough
1,194	Jan. 18, 1908	Curteis
17,827	1909	Zappert
26,738	1909	Rosenthal
15,675	1910	Lyons
1,157	1911	Brown

French Letters Patent

Number	Date	Patentee
127,180	October 1877	Ader
331,226	1903	Gaumonte, et Cie.
362,926	1906	Welton
397,609	1908	Persichetti

German Letters Patent

Number	Date	Patentee
183,685	1906	Muller
220,412	1909	Otto

Prior knowledge and use by each and all of the patentees of the above-mentioned United States patents, at the places given as their respective addresses in said patents of said patentees.

And defendant alleges on information and belief that the said alleged inventions and said alleged improvements in said patents, and each of them, were described in other publications not now known to defendant, and were known [fol. 19] to and used by others in the United States, whose names and residences and places of use, together with such further publications, defendant prays leave to set forth by amendment to this answer, when discovered.

Chas. E. Townsend, Wm. A. Loftus, Nat Schmulowitz, Solicitors and Counsel for Defendant.

Dated November 16th, 1926.

Service of copy of the within motion for leave to amend the answer, affidavit of Chas. E. Townsend on motion for leave to amend answer, and amendment to answer adding new paragraphs IX, X and XI, admitted this 18th day of November, A. D. 1926.

Wm. K. White, Chas. M. Fryer, for Plaintiff.

[File endorsement omitted.]

In United States District Court

Amendment to Answer—Filed Dec. 2, 1927

Now comes the defendant above named, and by leave of Court first obtained amends its answer in the above-entitled cause as follows:

Under the heading "British Letters Patent" enumerated in Paragraph XI, insert the following:

Number	Date	Patentee
29,833	1910	Brown
9,418	1899	Stroh
9,712	1898	Lodge

After the list of German letters patents insert:

[fol. 20] "Publications"

"Talking Machine News," a periodical printed in London, England, dated July, 1907, Pages 243 and 244;

"Theory of Sound," published by MacMillan, 1894, New York, 2nd Edition, Pages 395 to 430;

"Dynamical Theory of Sound," published by Edward Arnold, London, 1910, Chapter V, pages 139 to 156.

Gavin McNab, Nat Schmulowitz, C. M. Booth, Chas. E. Townsend, Wm. A. Loftus, Solicitors and Counsel for Defendant.

Dated November 30, 1927.

Service of copy of the within notice of and motion for leave to amend answer and amendment to answer admitted this 30th day of November, A. D. 1927.

Wm. H. Davis, Wm. K. White, Chas. M. Fryer, for Plaintiff.

[File endorsement omitted.]

[fol. 21] In United States District Court

Opinion—Filed July 23, 1928

This suit is one of many to vindicate Hopkins' patents 1,271,527, 1,271,529.

In reports thereof, to which Lektophone Corporation vs. Brandes Corporation, 20 Fed. (2) 155, opens the door, the description and details of the discovery and invention are sufficient, save some features material to the instant case.

The patents were granted July 2, 1918, on applications, original and divisional, filed July 14, 1913, April 17, 1918. Involved herein are claims 29, 30 of the first patent, and claims 1 to 8 of the second. The defenses are invalidity and noninfringement. And the decision is that claims 29 and 30 are invalid, the others not infringed.

Claims 29 and 30 are for application of leverage to the end that the tympanum's vibrations or movements will be shorter than those of the style upon the record.

The method is as old as Archimedes, its employment in infinite variety preceded Hopkins, and his use of it was analogous, mechanical, aggregation rather than combination, and not invention.

See

Concrete Co. vs. Gomery, 269 U. S. 177.
Concrete, etc., Co. vs. Co. 23 Fed. (2) 134.

Moreover, Brown (British, 29,833), if not Lumire (986,-477), had made use of the method in the prior art. And even as here, these claims have been held invalid.
[fol. 22] See Lektophone Corp. vs. Corporation, 20 Fed. (2) 157.

Claims 1 to 8 are for the tympanum of the patents, claims 1, 2, 3, 5, 6 and 7 for a tympanum "having a free area exceeding nine inches in diameter," and claims 4 and 8, for one having "sufficient area" to realize the invention. In his specifications and during proceedings prior to patents, Hopkins committed himself to the theory that a tympanum exceeding nine inches in diameter alone would function, was necessary, and was his discovery and invention. Accordingly all claims are so taken. Likewise did he commit himself to a tympanum necessarily made of a particular kind of material and construction, tho not incorporated in any — these claims.

And because in these particulars of diameter, material and construction, defendant's tympanum or device substantially departs from plaintiff's there is no infringement.

The specifications are for improvements in sound regenerating devices, by substitution of a "tympanum of novel construction" for the sound-box and horn in common use, wherein the virtues of the former and the vices of the latter are detailed.

In description the tympanum is a hollow open cone and a surrounding flat rim at right angles to the axis, the outer edge of which rim is "tightly gripped and rigidly supported between" two metal rings.

The specifications state that "if satisfactory regeneration of sounds is to be had, the whole diameter of the tympanum" between the supporting rings "should exceed [fol. 23] nine inches in order that the conditions shall be fulfilled which are required to regenerate the sound waves"; that the diameter of the base of the cone "should exceed

in area one-half the effective area of the entire tympanum * * * or in other words * * * should be at least eight tenths'' of the diameter of the tympanum, and the height of the cone should be ''at least one quarter of the diameter of its base''; that ''it is, of course, possible to make some variation from the approximate sizes given without materially altering the result, but if the tympanum is made as shown in the drawings any great variation from these proportions will be found to effect the character of the reproduction''; that smooth surfaces and the form shown in the drawings are preferred, ''yet it is possible'' to form radial corrugations in the cone and radial or concentric corrugations in the flat rim, whereupon ''it is possible some variation from the proportions above given may be found possible and perhaps advisable, but such variations from the proportions given will not be great''; that the tympanum is of ''light vibratile material'' and ''preferably of a collodial substance'' of thickness ''according to the crispness or stiff character of the material used. Compressed fibrous material, such as hot pressed paper or fiber, has been found to act satisfactorily''; that ''it is of vital importance that the tympanum be made of crisp, strong material having considerable rigidity within itself''; that a conical shape is given the tympanum ''so that shocks or vibrations impresed upon the apex of the [fol. 24] cone in a direction toward its base will move the whole cone bodily,'' precluding wave motions therein; that the vibrations or shocks ''are to be applied to the tympanum as a whole * * * to insure the movement of the tympanum as a whole''; that otherwise, the ''paper or hard rubber'' tympanum ''would be distorted, * * * the effect of the shock upon the tympanum as a whole being entirely lost''; that the flat rim '' maintains the place of the conical active portion of the tympanum,'' permits required motion of the cone but ''resisting its displacement in just that degree necessary to maintain the form and neutral position of the active conical portion''; that considerably greater width of this rim or marked narrowing, would destroy its function ''to a degree corresponding to its departure from the approximate proportion given, and the effective portion of the conical portion of the tympanum would be proportionately lessened''; that by reason of leverage, ''the length of vibration of the tympanum

is relatively much less than that of the style," thus reducing wear of the record, and the resultant small movement of the tympanum is compensated, for that "its large area enables it to move a large body of air, so as to obtain sound waives of large volume and great carrying power."

By the file-wrappers by plaintiff presented, it appears there was prolonged controversy between the applicant and the patent office, wherein were repeated rejections of the claims for a tympanum "exceeding nine inches in diameter," because size is not patentable unless material to [fol. 25] the result. To this the applicant responded "that the size of the tympanum is what enables it to effect direction regeneration of the sound, * * * a light, vibratile tympanum of substantially nine inches in diameter or greater must be employed in order to obtain faithful reproduction"; that the size in excess of nine inches in diameter is "essential" and "has been demonstrated by the applicant by actual trial"; that the "selection of the particular dimensions is of the essence of the invention and attains novel results arising from the particular dimensions" as applicant would and did demonstrate to the examiner; that "it is essential to the success of applicant's machine that the tympanum be of large area and that the base of the vibratile portion thereof exceed nine inches in diameter"; that these are "definitions of the essential characteristics of the invention"; and that he has "demonstrated that his invention is not wholly satisfactory when the conical tympanum is made with a basal diameter of less than nine inches." Thereupon the examiner yielded and the claims were allowed accordingly.

In so far as the specifications state that it is "possible" to vary the "approximate sizes given," it is believed the reference may be to the maximum diameter of the tympanum and is to the proportions between diameter of the cone, its height, and diameter of the flat rim, their relation to each other, and not at all to lessen the diameter of the tympanum.

For the suggested possibility is followed by the warning [fol. 26] that if the tympanum of the drawings be employed, "any great variation from these proportions" (that is, size in relation one to others but not of the tympanum as a whole) will result unsatisfactorily. The same distinction

is employed in reference to variation of proportions if the tympanum be corrugated. And only such variation will be as it must be "within the scope of the claims."

See Minerals Separation vs. Co., 250 U. S. 341.

If any ambiguity in applicant's language, the construction is against him and any broadening of the claims. All this is confirmed by permissible resort to the file-wrapper of plaintiff presented.

See

Goodyear Co. vs. Davis, 102 U. S. 227.
I. T. S. Co. vs. Co., 272 U. S. 444.

To avoid rejection and to secure allowance of claims for a tympanum represented to be necessarily in excess of nine inches in minimum diameter, Hopkins represented, insisted and demonstrated the necessity, that therein was his discovery and invention, that it was of the essence and essential to success, was what enabled direct regeneration of sounds, must be employed, attains novel results, and was an essential characteristic of his invention.

Representations in these circumstances made to secure patents narrow the grants, operate as disclaimers and limitations, and as such are to be given effect. Made then, they cannot be repudiated now.

[fol. 27] See

Holland etc. Co. vs. Co. (May 14, 1928), — U. S. —;
I. T. S. Co. vs. Co., 272 U. S. 444;
Minerals Separation Case, 250 U. S. 336;
Wright vs. Yuengling, 155 U. S. 52;
White vs. Dunbar, 119 U. S. 47;
Sargent vs. Co., 114 U. S. 86;
Mahn vs. Harwood, 112 U. S. 361.

Hopkins taught that only tympanums exceeding nine inches would function, in consequence of which all the field below that figure was left open to other experimenters, discoverers, inventors. He made a particular size material.

As defendant's tympanum is only 8 7/16 inches in diameter, a size not discovered or invented and denied and disclaimed by Hopkins, a size not taught by his patents, it does not infringe. Moreover, Hopkins also made a particu-

lar kind of material and construction material to his invention, and to them the patents are limited. He described his tympanum as necessarily made throughout of crisp, vibratile material of considerable rigidity, as paper, fiber, hard rubber, to vibrate effectively throughout. The specifications stipulate that the cone shall "exceed in area one-half of the effective area of the entire tympanum," and the vibrations of the flat rim with something less than half the total area, undoubtedly materially contribute to the regeneration of sound.

In defendant's device only the cone is of crisp vibratile material, the flat rim being of limp kid, and the former alone effectively vibrates.

[fol. 28] The material of the one differs from that of the other, as do things differing in nature. Hopkins discovered and invented the one, but not the other, and his patents teach that the first is vital to success and that the second spells failure.

Difference in material results in relatively great difference in size. For whereas the diameter of the effective area" of plaintiff's tympanum exceeds nine inches, that of defendant's is but seven inches, the area of the first being 66% more than the area of the second.

To this element of material and construction is applicable the foregoing comment and citations in respect to the element of size.

In so far *is* it is urged that the flat rim is but a flexible hinge and that defendant's is an equivalent, the answer is that the patents do not so limit its function, do limit the nature of the material, and that at the time of the patents it not being known that with a flat rim if limp material the tympanum would function, the principle of equivalents does not apply.

See

Imsauser vs. Buerk, 101 U. S. 656.
Rowell vs. Lindsay, 113 U. S. 102.

True, in Lektophone Corporation vs. Brandes Corporation, 20 Fed. (2) 155, the Circuit Court of Appeals for the Third Circuit held that a flat rim of perhaps soft rubber infringes, apparently upon the principle of equivalents. But the Court took no note of the facts that the specifica-

tions declare crisp material throughout to be vital (neces-
[fol. 29] sary, that on which success depends), limit the nature of the material, attach necessity to its inherent qualities and attributes, do not limit the function, and that when the patents were granted the sufficiency of limp material was unknown.

If otherwise alike, that case and this differ in judgment, which suffices to forbid conformity merely to comply with the rule of comity urged.

Too often is the rule invoked to extend the operation of erroneous decisions and to defeat review by the Supreme Court, or for the sake of appearances and face saving. Justice is more than these latter,—is the substance whereof they are the shadows sometime distorted.

To change judgment out of mere comity, is perversion of judicial function and defeat of justice. And yet it is done whenever the facts and findings in one patent case are taken into account in another, to the prejudice of a party in the latter who is a stranger to the former.

See Carson etc. Co. vs. Co., 17 Fed. (2) 816; C. C., 26 Fed. (2) —.

For this judicial rule peculiar to patent cases tried in equity, is no justification in principle.

None of the eight claims of the second patent having been infringed, the issue of validity need not be and is not determined. It is observed, however, that at best these patents are combinations of what was old in the art, and effect little, if anything, more than difference in degree; that is, increased volume or loudness by increased capacity
[fol. 30] or area. They are somewhat analogous to a patent for a 50-gallon barrel by the inventor discovered possible in a world of 5-gallon kegs, hardly invention, even when the first time made (always is a first time, however obvious and mechanical), and though extensively used.

Hopkins tympanum differs nothing from Brown's (British, 29,833), Stroh's (British, 3,393), and Dann and Lapp's (338,660), and little from English's (1,192,289), save in point of size and consequent volume; and Brown had taught, if the obvious needs teaching, that increase in size would increase volume or loudness.

This had actually been done by Starling and Carr (Talking Machine News, July, 1907), and plaintiff's tympanum

is theirs supplied with the rim and support of the others. Lumire too (1,036,529), whose device is many quassi cones, expressly taught increased size, torsion, avoidance of nodes, and vibration as a whole by shock to the apex of the cone.

It would seem that the original thought or purpose of a crowded art to reproduce sounds more or less loudly, was carried forward by Hopkins in the same way by substantially the same means, though by increased size to corresponding increased results.

That some of the analogous devices of the prior art were transmitters and not receivers is immaterial, for any learned in the art knew that with some adjustment, either would serve for the other. Such change is not invention.

See Western Co. vs. Larne, 139, U. S. 605.

[fol. 31] Decree for defendant.

July 17, 1928.

Bourquin, J.

[File endorsement omitted.]

In United States District Court

Equity. No. 1726

Lektophone Corporation, Plaintiff,

vs.

The Rola Company, Defendant

Final Decree Dismissing Bill—Filed July 30, 1928

This cause having come on to be heard before the Court on the 10th and 11th days of May, 1928, and having been brought to a final hearing, upon the pleadings and proofs, and counsel for the respective parties having been heard, and the cause having been fully considered by the Court and an opinion having been filed therein on the 23d day of July, 1928, it is hereby

Ordered, adjudged, and decreed that the bill of complaint herein be and the same is hereby dismissed, and that de-

fendant be allowed its costs and disbursements to be taxed by the Clerk in the sum of $131.44.

[fol. 32] The Court's decision is referred to.

Bourquin, United States District Judge.

Dated July 27, 1928.

Approved as to form as provided by Rule 22.

Wm. H. Davis, F., Attorney for Plaintiff.

[File endorsement omitted.]

IN UNITED STATES DISTRICT COURT

DOCKET ENTRIES

July 13th, 1926.—Filed complaint. Issued subpœna ad res. Made cert. to Com. of Patents.

July 14th, 1926.—Filed Subpœna ad res. with return showing service on The Rola Company on July 14.

August 19, 1926.—Filed answer.

Sept. 14th, 1926.—Filed stip. ex. time to file interrogatories. Filed stip. extending time. Filed stip. ex. time. (Interrogatories.)

Sept. 28th, 1926.—Filed stip. ex. time to file interrogatories.

Oct. 30th, 1926.—Filed order ex. time to file interrogatories.

Nov. 18th, 1926.—Affidavit and amd't to answer.

Dec. 7th, 1926.—Filed notice of hearing motion. Ord. motion for leave to amend answer granted, etc.

[fol. 33] Dec. 13th, 1926. ——.

Mar. 7th, 1927.—Ord. trial set for June 7.

May 14th, 1927.—Filed stip. con. to July Term.

Aug. 2d, 1927.—Ord. con. to Sept. 6 to be set. Filed stip. to drop from calendar.

Sept. 19th, 1927.—Ord. con. to November Term.

Nov. 14th, 1927.—Ord. trial set for Dec. 20. Filed stip. Ord. trial con. to Jan. 3, 1928.

Dec. 2d, 1927.—Filed notice of and motion for leave to amend answer. Filed stip. ord. trial con. to Feb. 7, 1928.

Dec. 12th, 1927.—Ord. motion for leave to amend answer granted.

Jan. 19th, 1928.—Filed stip. regarding identification of patents. Filed stip. regarding use of testimony.

Feb. 15th, 1928.—Ord. trial con. to March 20.

Mar. 3d, 1928.—Filed stip. ord. trial con. to April 24.

April 2d, 1928.—Order trial con. to May 10.

May 10th, 1928.—Ord. trial evidence intro. and trial con. to 11th.

May 11th, 1928.—Ord. trial resumed. Evidence intro. and cause submitted. Filed reporter's transcript.

May 31st, 1928.—Filed reporter's transcript.

June 23rd, 1928.—Filed deft.'s memo.

July 17th, 1928.—Filed pltf.'s memo.

[fol. 34] July 23rd, 1928.—Filed decision. Ord. decree entered in favor of deft. Made and mailed copy of order to attys.

July 30th, 1928.—Filed decree and entered same. Made and filed enrolled papers.

Aug. 1st, 1928.—Filed memo. of costs.

Sept. 12, 1928.—Filed petition for order allowing appeal.

Sept. 12, 1928.—Filed assignment or errors. Filed and entered order, allowing appeal. Filed bond. Filed citation.

Dec. 26th, 1928.—Filed condensed trial record. Filed joint præcipe and stipulation.

In United States District Court

Statement of Evidence

After an opening address by Mr. Davis for plaintiff, the following plaintiff's exhibits were received in evidence:

Plaintiff's Exhibit 1—Printed copy of patent to Marcus C. Hopkins, No. 1,271,529, July 2, 1918.

Plaintiff's Exhibit 2—Printed copy of patent to Marcus C. Hopkins, No. 1,271,527, July 2, 1918.

[fol. 35] Testimony on Behalf of Plaintiff

Testimoney of Louis A. Hazeltine for Plaintiff

Louis A. Hazeltine was called as a witness on behalf of plaintiff, was duly sworn, and testified as follows:

Direct examination.

By Mr. Davis:

I am forty-one years of age and am a research engineer. I graduated from Stevens Institute of Technology in the year 1906, with the degree of mechanical engineer. A year later I joined the Electrical Engineering Department at Stevens, with which I was connected until 1925, being for eight years the head of the department, with the title of Professor of Electrical Engineering. During that time I, of course, studied problems connected with telephony, which includes acoustical phenomena. I took up, as a specialty, the subject of radio, which depends for its final usefulness on acoustic phenomena, particularly as connected with loudspeakers. During the last two or three years I have made a special study of loudspeaker operation, of a mathematical and also of an experimental nature, having had several models built under my design.

I have made a study of the patents here in suit. I believe that the description occurring in lines 27 to 66 of page 1, of patent No. 1,271,529, as to the mode of operation of the sound-box and horn combination is quite correct as far as [fol. 36] it goes. In carrying that discussion a little further to explain how the sound-box and horn combination impresses on the air sound waves of different pitch or frequency of vibration within the audible range—there are two problems that arise and call for the use of this combination or other means. The first of these problems arises from the fact that air is an exceedingly soft or yielding medium, so that when you attempt to set air into vibration by moving a relatively heavy solid object, you find that that air does not offer sufficient resistance, naturally, to enable it to absorb power readily. To an electrical engineer, the analogy is the operation of an electrical generator very nearly on short circuit, so that although there will be lots of current produced there will be very little pressure built up, and relatively a small amount of power, assuming that the generator current is limited by its internal reaction. The fact that that air is so soft or yielding requires the use of a sound-box with a relatively small opening, so that the air, in issuing from that opening, will act more stiffly on the

diaphragm which is inside of the sound-box. The effect is essentially the effect of a leverage. The pressure which is applied in the throat or opening exists there over a small area. The diaphragm, ordinarily has a larger area, several times larger, so that the pressure, reacting on the diaphragm, is greater by reason of its greater area (that is, the total force or integrated pressure), and that is more suited to the mechanical characteristics of a solid body such [fol. 37] as a diaphragm. The use, therefore, of the sound-box with this relatively small opening solves one of the two difficulties which I have in mind, that is, it gives a stiffer effect, a stiffer reaction against the diaphragm. However, another difficulty appears, which is even more serious, as it ordinarily arises, and that is that when sound waves of mechanical air vibrations are initiated at the surface of a relatively small opening, or, in general, over any relatively small surface, they will set the air in the immediate neighborhood into vibration, and there will be comparatively little radiation of sound. That is one of the peculiarities of wave motion that is somewhat hard to visualize although it is comparatively easy to work out in a mathematical way and has been recognized since the earliest study of the wave motion. It can be likened to wave motions set up in water, which are the wave motions that are perhaps easiest to visualize. If we take water and move a very small object in it, for instance, if one puts his finger into water and moves it back and forth, there will be a certain carrying along of the water with the finger that makes the finger feel as if it were heavier than its own natural weight; but the vibrations produced in that way do not produce any considerable amount of wave motion. The vibrations produced in that way are largely confined to the water in the immediate neighborhood of the finger. On the other hand, if you take a board or paddle, and move that back and forth in [fol. 38] the water at the same rate as before, distinct wave motions will be produced, and waves will radiate out from that paddle to a considerable distance. The reason is that that the dimensions of that paddle are of the same order of magnitude as the wave length, the distance between crests of the waves that are produced; whereas when the finger was moved at that rather slow rate the dimensions of the finger are very small compared with the length of the waves

(and that is the criterion, as far as vibration will result in waves of water), so it will be largely a local phenomenon. Now, in air, the length of the wave of sound is directly calculated from the pitch or frequency, and from the velocity of sound. The frequencies that are most useful in speech and in music, the frequencies that we care the most about, are from about 100 cycles per second up to about 5,000 cycles per second. Actually, we can hear down to something of the order of 30 cycles per second, and up to 10,000 to 20,000 cycles per minute, the upper limit varying considerably with the individual. The velocity of sound in the air is about 1100 feet per second, and if we divide that velocity by the frequency we get the wave length; so that at a frequency of 1100 cycles per second, which is right in the middle of the useful range, we will have a wave length of one foot. At low frequencies we get wave lengths of several feet; at 100 cycles per second the wave length would be 11 feet; if we adopt a criterion such as I have just mentioned, in order to get real effective wave action, we should have an aperture of the order of 11 feet. That, however, is [fol. 39] a little too rough to be precise. More accurately, we can say, that radiation is good if the diameter of the radiating surface is about one-third of a wave length, so that we would need to have a vibrating surface of the order of four feet to very effectually reproduce a frequency of 100 cycles per second. Now, the diameter of the aperture of the sound-box would evidently be a fraction of an inch; that is so entirely out of the order of magnitude required for effective radiation, until we get the very high frequencies, that it is quite unsuited for a sound reproducer. That difficulty is gotten around partially, and, in some cases, quite successfully, by fitting to the end of the aperture the ordinary horn. If a horn is made with a diameter at its mouth of the order of four feet, if it is made long enough so that its rate of expansion is not too great, so that as the wave passes through its narrow throat to its wide mouth, it expands very gradually, then the reproduction can be quite satisfactory. But, of course, a horn with a diameter at its mouth of four feet is objectionable for a great many uses. The ordinary horn with a diameter of less than a foot at its mouth will not satisfactorily reproduce the low frequencies. Of course there can always be some repro-

duction, because any kind of vibration will result in some sound, but in order to get a considerable amount of sound at a low frequency with the ordinary small horn, the amplitude of vibration, that is, the distance which the center of the diaphragm must traverse, becomes quite prohibitive, [fol. 40] and that is the reason why the character of speech or music is lost to a considerable degree in a sound reproducer employing a sound-box and horn.

As to how a direct acting sound generating device of the kind specifically described and illustrated in Hopkins patent 1,271,529 (that is, one having a tympanum supported in a rigid frame, and comprising a central conical portion made of paper from three to twenty thousandths of an inch thick, with a base not less than 7.2 inches in diameter, and an altitude of at least 1.8 inches, and a supporting rim extending from the edge of the cone to the rigid frame) reproduces sound—in the first place, the conical portion is large enough so that it acts on a relatively large area of air and on that large area of air is an integrated pressure or force which reacts against the driving mechanism sufficiently to give efficient radiation of power.

In the second place, that form of diaphragm, the conical form, is of great stiffness, structurally, so that although the paper is thin and thereby has very desirable lightness, yet it is stiff relatively to any pressure which is applied at its apex. For example, I have such a cone here. It is a simple cone with no rim of any kind. When I lay the base of the cone flat on the table and press on the apex I can press with a force which is certainly over a pound, and the deflection at that apex is noticeable only when you examine it carefully. It acts quite stiffly and rigidly. When a vibration of relatively low frequency is applied by a motor to the [fol. 41] apex of that, the cone will move bodily and will displace the air all over its surface. The contrast with a sounding box and horn may be made in this way: Assume that we have a cone with a diameter of eight inches, which is a usual diameter, and assume that with a sound-box we have a diaphragm whose effective diameter (that is, the diameter of an equivalent piston) is one inch, which is also a reasonable diameter, then the area of the cone (by which I mean projected area, that is, the area of the base) would be 64 times (the square of eight) the effective area

of the diaphragm which is to be within the sound-box. In order at very low frequency to have the same amount of sound produced, we would have to have 64 times the linear motion of the diaphragm in the sound-box, to what is needed in the case of the cone. The cone might, for example, have a total excursion at its apex of say four thousandths of an inch. In order to get the same radiation of sound at low frequency from the sound-box and horn we would have to have a diaphragm moving about one-quarter of an inch. Now, a motion of a quarter of an inch of a driving mechanism of that sort is out of all reason. It means that such low frequencies cannot be reproduced effectually with the ordinary sound-box and small horn. The conical diaphragm having the dimensions which you mentioned, therefore, has the practical result of enabling sound radiation to be produced over the useful frequency range, which is not the case with the ordinary horn type.

[fol. 42] Q. Now, in the construction as you have described it——

The Court: I do not think there is any particular issue or dispute as to the difference between this device and the old sound-box, is there?

Mr. Davis: I think there will be, your Honor.

The Court: Is there, Counsel?

Mr. Loftus: I do not think that is in issue, at all, your Honor.

The Court: Proceed, briefly.

(Witness proceeds.)

This cone, as I have just described it, is very stiff relative to a force applied to its apex, but is relatively very yielding with respect to a force applied around its periphery, because this cone which I have is quite unsupported at its periphery. The result, which experience showed, and which was a very serious one, was that when such a cone was set in vibration by having connected to it a motor through its apex, although it had a tendency to vibrate as a whole, yet it was so easy for it to vibrate in a way which might be described as fluttering, but is more often spoken of as weaving—that such a weaving motion would be found to be set up. That motion is one in which different portions of the

cone moved in opposite directions around the periphery, that is, the top might be moved forward and the bottom moved forward, and the two sides moved backward, all at the same time, setting up what are known as radial nodes. That is, in the case I have just described there would be [fol. 43] four lines equally spaced on the conical surface that would be stationary, or nearly so, and the four segments between those lines would be vibrating in opposite directions.

The primary function of the supporting rim extending from the edge of the cone to the rigid frame is to cure the weaving motion which I have just described. That weaving action results, practically, in a disagreeable blasting noise, prominent particularly at some of the low frequencies, that make the whole device very unpleasant to operate. A comparatively small constraint around the periphery will prevent the weaving action to any objectionable degree. On the other hand, if that constraint at the periphery is too great, if, for example, the periphery is fastened rigidly, then the whole diaphragm can only yield by bending, and it becomes much too stiff to suit the driving motor, and properly radiated sound, so that the thing which makes this a useful operative structure in that respect is a rim which is flexible, and which allows just a proper amount of yielding, so that the cone moves bodily, with little restraint, and the weaving action which results in blasting is, to all practical purposes, eliminated.

Mr. Davis: May I for a moment call the Court's attention to a statement in patent 1,271,527, beginning at line 124, on page 3, where the patent says:

"The plane peripheral portion 1 of the tympanum main- [fol. 44] tains the place of the conical active portion of the tympanum and yields sufficiently to permit of the required motion of the conical portion, resisting, however, displacement of the conical portion in just that degree necessary to maintain the form and neutral position of the active conical portion."

Plaintiff's Exhibit 3.—The Rola Loudspeaker complained of as an infringement, is received in evidence as Plaintiff's Exhibit, 3, it being stipulated that this loudspeaker was sold by the defendant company after the issuance of the

patent in suit, within six years prior to the filing of the bill of complaint herein.

Comparing defendant's loudspeaker, Exhibit 3, with the structure of patent 1,271,529, I find in it an embodiment of the patent disclosure. I find that this exhibit has a tympanum or diaphragm with a central conical portion, having a diameter which I measured and found to be 7 9/16 inches, which is greater than the lower limit indicated in the patent of 7.2 inches. This conical portion is made of paper, and as described in the patent.

I have measured the thickness of a cone which appears to be identical with this, and have found the thickness of the paper to be between 8 and 9 thousandths of an inch which is between the limits stated in the patent, of 3 to 20 thousandths of an inch.

I have measured the height of the cone, the distance from the apex to the plane of the base, and found that it be two inches, which comes within the limit stated in the patent [fol. 45] for the relation of the diameter.

Outside of the active conical portion, I find a flexible rim, which is here apparently of leather, and that rim is more flexible in its material than is paper, and is correspondingly narrower than it would be if made of paper, as indicated in the patent.

The rim is fastened, in turn, at its outer edge, to a solid rigid metal support.

Plaintiff's Exhibit 4.—Two drawings of defendant's loudspeaker (Exhibit 3) are received in evidence as Plaintiff's Exhibit 4.

I believe the mode of operation of defendant's loudspeaker is just the same as the mode of operation described in the Hopkins patent.

The motor element is connected with the apex of the cone, which is set into vibration, which acts directly on the unconfined air to initiate sound waves, which are then radiated.

Around the active conical portion is the rim to which I have referred. That has the effect of eliminating the blasting which I have described, and also of holding the conical portion in a neutral position, so that it will not get out of line, just as I have described, in the Hopkins patent, and it

has sufficient flexibility to offer an effective restraint to the normal motion of the diaphragm.

With reference to the subject matter of the other patent No. 1,271,527, I have examined the actuating movement of defendant's loudspeaker and find that it embodies a lever [fol. 46] reduction such that the vibrations imparted to the tympanum are relatively much shorter than the vibrations imparted to the actuating armature. The tympanum is fastened at its center to a rod which, in turn, is soldered on to a lever. That lever has a fulcrum at one end, and has rod going to the tympanum at the middle, and a rod going to the armature at the other end. I have measured the lever arms, and found that the lever arm from the tympanum rod to the fulcrum is three-eighths of an inch, and from the rod going to the armature the lever arm is nine-sixteenths of an inch, so that the cone or tympanum moves through a distance two-thirds of that moved through by the end of the armature to which the rod is attached.

Plaintiff's Exhibit 5.—A drawing of the actuating device of defendant's loudspeaker (Exhibit 3) is received in evidence as Plaintiff's Exhibit 5.

Cross-examination.

By Mr. Loftus:

Q. You stated that the operation of the Rola cone was the same as that described in the Hopkins patent. What is the nature of the peripheral rim, as described in that Hopkins patent, what material is that formed of?

A. The rim is a plain rim, which is said to be flexible. The material is said to be of a colloidal substance, and it is also stated that "Compressed fibrous material, such as hot-pressed paper or fiber, has been found to act satisfactorily." It seems to leave it open.

[fol. 47] Q. It is also stated there that the material be "crisp, strong material, having considerable rigidity within itself," is it not—page 2, line 104 of the patent 1,271,529?

The Court: If it does, you have read it; tell him so and base the question on it.

Q. What would be the purpose of forming the rim of the cone of this crisp, strong material?

A. The cone is supposed to have considerable rigidity—

Q. Likewise the rim, isn't that true?

A. It must have enough rigidity to bring the cone back into a neutral position and prevent the weaving action, which results in blasting.

Q. In other words, that rim, then, was intended to be made of springy material. Is that correct?

A. All materials are springy to some degree. It must have enough springiness to achieve the results which I have just stated.

Q. Do you find any springiness in the leather rim of the defendant's device?

A. In the sense that I have indicated, I do. I find, if the leather is pushed to one side, displaced, it would tend to return to its normal position, and that is the characteristic of springiness.

Q. But, ordinarily, kid leather is not considered a springy material?

A. That depends upon how it is mounted. If it is mounted so that it can be under tension when it is deformed it may have appreciable spring action.

[fol. 48] Q. In the defendant's device which you have just referred to, and which has been offered in evidence, what constitutes the tympanum?

A. The active conical portion, which is the paper, and the rim, which is apparently of leather.

Q. What is your definition of a tympanum?

A. I have given my understanding of tympanum, based on the description of the patent.

Q. What is your understanding, ordinarily, of a tympanum?

A. I have never used the word, myself.

Q. You are not familiar with the word at all?

A. I have heard the word, but I have not seen it often enough, nor have I looked it up in the dictionary, to know what the definition really is.

Q. In the Hopkins patent, this flat rim is part of the sounding-board, that is, it gives off some of the sound, does it not?

A. It gives off some sound, but my understanding of the patent is that the active sound-producer, that is, the part which gives out the major portion of the sound, is the cone.

Q. But the flat rim does the same to a certain extent?

A. To a certain extent, and incidentally.

Q. But in the defendant's device that limp leather is not any part of the sounding-board, is it?

A. It is not an important part. There must be some vibration, therefore some sound produced by it.

Q. Not audible, though?

[fol. 49] A. That is a matter of degree. It is not important, I said.

Q. Now, what is the diameter of the tympanum in the defendant's device which you have referred to?

A. 8 7/16 inches, I measured.

Q. And what was the least diameter which you found specified in the Hopkins patent?

A. 9 inches.

Q. Now, you notice, of course, that the defendant's device is equipped with a surrounding frame or baffle-board. What is the purpose of that?

A. I believe that the most important purpose is to separate the motion of the front surface of the diaphragm, as it acts on the air, and the motion of the back surface, so that at low frequencies those two effects, one compressing the air, and the other rarifying it, will have less tendency to counteract one another.

Q. Without that baffle-board it would be impossible to get those notes of lower frequencies, would it not?

A. That, again, is entirely a matter of degree.

Q. I am speaking now of a cone of the size of the defendant's cone, that is, one under nine inches.

A. The baffle-board in the defendant's device is relatively a small one. It is not large enough to be completely effective, yet it is large enough to do an appreciable amount of good, I believe.

Q. Without the baffle-board, the defendant's cone would not be a commercial article, would it, or an effective sound reproducer?

[fol. 50] A. I think it would be a commercial article. I think, while not the best, it would be certainly very much better than any, if not most, horn-type speakers.

Q. But with the baffle and that small cone, you are able to produce those notes of low frequency which you otherwise would not obtain, isn't that a fact?

A. It is a matter of degree, but, generally speaking, that is true. You always get some low notes. You get more with the baffle than you would without.

Q. Do you find anything in the Hopkins patent with respect to the use of the baffle?

A. I do not find that the baffle is mentioned as such, although it is possible that the enclosing of or partial enclosing of the tympanum might have some such effect, to a certain degree.

Q. But there is no partial enclosing of the tympanum, is there?

A. I find that in some of the drawings the walls are shown rather close to the edge of the outer rim, and although I do not think that that is an important effect, I do not feel justified in entirely disregarding it.

Q. What would you say was the size of the tympanum illustrated in the Hopkins patent, comparing it with the diameter of the turntable?

A. It is slightly less in outside diameter than the turntable.

[fol. 51] Q. That turntable ordinarily is of what diameter?

A. I really do not know. I do not think that that is a fixed thing.

Q. You know what size phonograph records come in, do you not? You have seen sixteen-inch records?

A. Yes, I have seen them. I do not use the phonograph, myself, but I have seen them, of course, and handled them a good many times.

Q. Some of them as much as sixteen inches in diameter?

A. I have never handled one as large as that.

Q. Now, with a large cone, such as the Hopkins patent discloses, it really is not important to provide any baffle, is it?

A. That, again, is a question of degree. Without the baffle it is my opinion that it would still be materially better than the horn-type speaker, of the ordinary form, I believe that it may be somewhat improved by the use of a baffle, or by making it not at the lower limit indicated by the Hopkins patent, but at some point greater than that lower limit.

Q. But you will agree that where a cone of the large size specified by the Hopkins patent is employed, the importance of providing a surrounding baffle is not nearly so vital as in the case of the small Rola cone that defendant manufactures. That is true, is it not?

A. I cannot agree with the implication of the question. [fol. 52] The size of the Rola cone is within the limits of the Hopkins patent.

Q. Well, you just said that it was less than nine inches.

A. I did not say that the cone was less than nine inches. Your question had to do with the total tympanum, which is just a little bit less in the Rola device than is specified in the lower limit of the Hopkins patent, but the cone which you ask about in your other question is a little larger than he specified.

Q. See if you cannot answer that question now.

A. The question seems to have a misstatement in it, so that I cannot answer it.

Q. I thought that we agreed the Hopkins patent disclosed a cone somewhat in excess of nine inches, and that the defendant's cone was less than nine inches.

A. The defendant's cone is less than nine inches, and the Hopkins cone can have any size greater than 7.2 inches.

Q. Where do you find that 7.2 inches specified?

A. It is specified that the base of the cone should be greater than eight-tenths of the diameter of the tympanum, and the diameter of the tympanum should be greater than nine inches, and eight-tenths of nine inches is 7.2 inches.

Q. But my question is directed to the over-all diameter between the rings. You concede that the defendant's device is much smaller between the rings than that disclosed in the Hopkins patent.

[fol. 53] A. No, it is a little smaller, it is only a fraction of an inch smaller than the lower limit of the Hopkins patent.

Q. When you get diameters of less than nine inches between the rings, then it is true that it becomes of greater importance to provide the device with a baffle than where you are dealing with larger diameters, such as the Hopkins drawings apparently show?

A. I am not convinced that the Hopkins drawings do apparently show that, but without that limitation it is correct in general that the smaller the diameter of the tympanum the more important it becomes to use a baffle.

Q. And without that baffle, you lose those lower frequency notes, do you not?

A. You do not lose them, but you have them weakened.

Q. They do not seem to be there, to the ear?

A. That, again, is a question of degree; if you are close up you can hear them quite plainly, if they exist, but if you are farther away you won't hear them so well.

Mr. Loftus: That is all.

Redirect examination.

By Mr. Davis:

The effect of changing the width and stiffness of the rim that supports the cone in one of these devices is that if the rim is made narrower, it should be correspondingly of more flexible material, so that the final stiffness effect will be of [fol. 54] the order of magnitude to get the result called for in the patent. In defendant's cone, the rim is narrower, but it may be of more flexible material.

Plaintiff's Exhibit 6.—A certified copy of the file-wrapper history of patent 1,271,529 is received in evidence as Plaintiff's Exhibit 6.

Plaintiff's Exhibit 7.—A certified copy of the file-wrapper history of patent 1,271,527 is received in evidence as Plaintiff's Exhibit 7.

Plaintiff's Exhibit 8.—A binder containing certain patents cited by the Examiner during the prosecution of the applications is received in evidence as Plaintiff's Exhibit 8.

STIPULATION RE PATENTS

(It was stipulated between counsel that the patents to Holden, No. 762,904, Head, No. 805,544, Walker, No. 805,600, and Hogan, No. 632,015, are the patents referred to in the following statement contained in the amendment of March 28, 1916, filed during the prosecution of the application which resulted in Hopkins patent No. 1,271,527, the statement being as follows:

"In respect of the prior art patents, not of record, but to which attention has been called, and which shows horns or other amplifying devices made of paper or the like, and directly associated with the needle or stylus.")

Close of prima facie case.

After an opening address by Mr. Loftus for defendant, the following defendant's exhibit was received in evidence: [fol. 55] Defendant's Exhibit 9.—A binder of prior art patents and publications is received in evidence as Defendant's Exhibit 9.

Testimony on Behalf of Defendant

(Mr. Loftus referred to a stipulation between counsel by which certain depositions were agreed to be admitted, the depositions being those Edward K. MacEwan, Albert C. Diehl, and Mr. Harry O. Sooy, in the case of Lektophone Corporation vs. Western Electric Company, United States District Court for the Southern District of New York, and then after having obtained permission of the Court proceeded to read the depositions.

The above-mentioned stipulation is as follows:)

Stipulation re Depositions

"It is hereby stipulated that the three depositions attached hereto, being the testimony of the persons named in a cause entitled Lektophone Corporation vs. Western Electric Company, Incorporated, in Equity No. 30—234 in the United States District Court for the Southern District of New York, and the exhibits, identified by the said persons and introduced and used in the said cause No. 30—234 as Exhibits 'A' and 'B,' may be used by the defendant in this above-entitled cause, with the same force and effect as if said depositions and exhibits were regularly taken, and introduced in this cause. It is further stipulated that the total manufacture of loudspeakers using the diaphragm of [fol. 56] Exhibit 'A' by the Victor Talking Machine Company did not exceed 40,000, and that none have been manufactured or sold except in the years 1925 and 1926."

Deposition of Edward K. MacEwan for Defendant

(The deposition of Edward K. MacEwan, included by the above-mentioned stipulation, reduced to narrative form, is as follows:)

Direct examination.

By Mr. Scull:

My residence is 6334 Woodbine Avenue, Overbrook, Pennsylvania. I am secretary of the Victor Talking Machine Company, whose plant is located at Camden, New Jersey. I have been employed by the Victor Talking Company since 1900. In 1908 or 1910 I was assistant to Mr. English, who had charge of the experimental laboratory and my duties principally at that time were the manufacturing of the recording material and assisting Mr. English in clerical matters.

(The witness was shown a device and asked if he knew what it was.)

Yes, that is a machine that came over to the laboratory—to the best of my knowledge, that is the same machine that came over to the laboratory of the Victor Talking Company in either the latter part of 1908 or 1909, the early part of 1909. It is a Lumiere machine. I heard it played in 1909. I considered that it had very much broader tone of production that machines we were making at that time. At that [fol. 57] time we were making an enclosed horn and sound-box machines.

Subsequent to my hearing this machine in 1909 the Victor Company experimented with diaphragms of the Lumiere type. The purpose of the experimenting was to try to accommodate the Lumiere diaphragm to the product that we were making at that time.

As to the location of the diaphragm in these experimental machines with relation to the support for the record—as I recall in the early experiments, the diaphragm rested on the turntable, but their object was to try to make it more accessible for use, more convenient, and they later on developed a machine in which the diaphragm was placed in an upright position. When I say convenient I mean to get it away from the turntable.

The Victor Company are making loudspeakers to-day with these plaited paper diaphragms and those loudspeakers are for radio purposes. The diaphragm is substantially the same as the one on the machine which I have identified.

(The machine identified by the witness was received in evidence as Defendant's Exhibit "A.")

NOTE.—A Photographic reproduction of this Defendant's Exhibit "A" is in evidence as Defendant's Exhibit 34 in this case.

In making these radio loudspeakers with the plaited diaphragm the Victor Company was doing so under a license under the Lumiere patents. As to when the Victor Com- [fol. 58] pany entered into a license arrangement with Lumiere,—they took an option according to my recollection in the early part of 1909. That option was taken up and they have a contract.

In the experiments of which I have any knowledge, no change that I know of was made in the diaphragm itself of Exhibit "A." The experiments which I have mentioned were merely to fit these large diaphragms into the Victor cabinet machines. Also they had it so arranged that they could use it on a table type machine.

As Secretary of the Victor Company I am fairly familiar with the sales of Victor talking machines. Something over three hundred thousand Victor talking machines of the sound-box and horn-type were sold in 1918. Over four hundred thousand were sold in 1919. In 1920 I think we came up to the five hundred thousand mark.

I heard of the Pathe Actuelle in 1918, 1919, or 1920. I never heard any discussion amongst the officers of the Victor Company as to any effect which the sales of the Actuelle machines were having on the Victor sales.

Cross-examination.

By Mr. Davis:

As I recall, the option with the Lumiere Company was taken up in the form of a license contract around 1909.

As to whether the Victor Talking Machine Company ever manufactured any phonographs with the Lumiere diaphragm and sold them,—I think that they had sent out a [fol. 59] few to the different foreign countries. To my knowledge they never sold any in the United States. I could not say how many they ever manufactured and sold. It was very few.

The first radio loudspeakers with the Lumiere diaphragm were made in 1925. They are still making them. They are called Victor loudspeakers.

The Victor Talking Machine Company is not manufacturing and selling devices with radio loudspeakers of any other type.

As to whether the Victor Company has recently offered on the market and has shown a phonograph combined with a radio loudspeaker,—I do not know of any exept the cone that we are placing in what we call our "Electrola" instrument. I would say that our Electrola instruments are the Deluxe latest model Victor Talking Machine Company instruments. They have a cone. The cone is not manufactured by the Victor Talking Machine Company. It is purchased from the Radio Corporation of America and manufactured by the General Electric Company.

I cannot say that I am familiar with the two types of radio loudspeakers that the Radio Corporation of America puts on the market under the numbers Radiola 100 and Radiola 104.

As to the size of the cone in the Victor Electrolas—if I recall, one is six inches and the other, I think, is thirteen inches.

As to whether the cones are supported around the edge by a flexible strip of leather fastened to the metal rings,—[fol. 60] I really do not know much about that. Mechanically I am not very keen on these things. I have not noticed them very much.

Mr. Davis: It is stipulated that in the Victor Talking Machine Company's product known as the Electrola, which is a combined phonograph and radio machine, the radio loudspeaker is either a Radio Corporation Radiola 100 or a Radio Corporation Radiola 104.

Mr. Scull: And that these loudspeakers are bought as part of the complete radio equipment from the Radio Corporation and this complete equipment is installed in the combined machine by the Victor Company.

Mr. Davis: And the loudspeaker serves as a loudspeaker both for the phonograph and the radio receiving set.

Mr. Scull: I will say that when the electrical pick-up is used in such a machine.

Mr. Davis: The electrical pick-up is a device by which the phonograph records may be utilized to actuate the electrically actuating mechanism of the loudspeaker.

I do not recall how many horn-type phonographs were sold by the Victor Company in 1921. As to whether it was less than in 1920,—I have not got the figures in my head. I do not really know. As to whether I know that the years 1918, 1919, and 1920 were the three biggest years the phonograph business ever saw,—I recollect that 1920 was the largest. The business of the Victor Talking Machine Com- [fol. 61] pany in horn-type phonographs in the year 1925 was not as large as other years. I think it was about four hundred thousand. I think it was around four hundred thousand in 1924. There has been a slight progressive falling off in the horn-type phonograph business since 1920.

As to whether the instrument which has been put in evidence as Defendant's Exhibit "A" came over to the laboratories of the Victor Company from France,—it was either brought over by Mr. Johnson or it was sent over. It was built in France by Lumiere or under his direction.

Redirect examination.

By Mr. Scull:

Horace Petit was the Patent Attorney for the Victor Company. He is now dead. The Mr. Johnson I have just referred to is the president of the Victor Talking Machine Company. He was president back in 1909. At the present time the Victor Company sells phonographs of the sound-box type with a horn, and without any radio attachment. That is the biggest product.

The Victor Company makes a machine in which there is both a phonograph horn and sound-box of the very old type, and also a radio cone loudspeaker. In the same machine there is incorporated a radio outfit. The radio reception is delivered through the cone loudspeaker and the mechanical reproduction from the record is delivered through the sound-box and horn. There is also in this machine a so-called [fol. 62] electrical transmission or electrical pick-up by which the phonograph record can also be transmitted to the cone loudspeaker.

Recross-examination.

By Mr. Davis:

As to how many radio loudspeakers with the Lumiere diaphragm the Victor Company have manufactured altogether,—I really think they manufactured about forty thousand. As to what month those loudspeakers were shipped out from the factory,—I think we started to make deliveries about December or January of 1925. No, I do not believe it was quite that early. I do not know whether the sales have been on the increase or decrease. The sales are not so high just at present. That is true of radio loudspeakers in general. It is a seasonal business. The company has not decided how many of these speakers with the Lumiere diaphragm they will manufacture for next year. They are manufacturing them now, but there has been no decision arrived at as to the quantity.

Deposition of Albert C. Diehl, for Defendant

(The deposition of Albert C. Diehl, included by the above-mentioned stipulation, reduced to narrative form is as follows.)

Direct examination.

By Mr. Scull:

My address is 229 North 39th Street, Camden, New Jersey. I am employed by the Victor Talking Machine Company and have been employed by them since 1899. I was [fol. 63] away a short while. The second reinstatement was from 1900.

I first saw the machine marked Exhibit "A," during the summer of 1910. The circumstances were as follows: I was called to help Mr. Elfering. He is now dead. I was called in to help him on some mechanical jobs. I have a machine shop and he having no machinery, I used to from time to time do his machine work for him and that is the time I saw his machine or one like it. I heard it played at that time. Mr. Eldering and Mr. Lumiere were present.

It seemed to me to have a clear, full tone. As to how it compared with the Victor talking machines that were being put out at that time,—I liked it. I thought it was a little more natural than our regular talking machines.

As to what Mr. Eldering was doing on this work, did not come in contact with him very often. He, so far as I know, was trying to arrange the machine so that it would be more convenient to get at the record by placing the diaphragm in a convenient position. I did not see very many of the experimental machines that Mr. Elfering made. I saw some. As to the difference between these machines and Defendant's Exhibit "A," so far as the diaphragm is concerned,—the diaphragm was always the same, as far as I know, with the exception that he was experimenting at times with different diameters of that small center, making it out of different materials, etc. and different diameters.

[fol. 64] Cross-examination.

By Mr. Davis:

As to whether I would say that the Lumiere speaker had less of a horny sound than the standard Victor talking machine,—I should say it was less sharp. More of a natural tone. It had more of the round, full tones, whereas the talking machines had more of a sharp, bright tone.

I did not know enough about it to know what a horn resonance is in these machines.

Deposition of Edward K. MacEwan, for Defendant (Recalled)

(At this point Edward K. MacEwan was recalled and testified further as follows:)

Direct examination.

By Mr. Scull:

At the present time the Victor Company is putting out a machine of the sound-box and horn type know- as the "Orthophonic."

As to the relative amount of business which the Victor Company is doing to-day in machines with the radio attachments about which I have testified and machines without such radio attachments,—the great bulk of the business is being done by the real talking machine with the Orthophonic horn and regular Victrola sound-box. That is not what I call an Electrola. The Electrola is the one with the radio combination. The other is the Orthophonic. The Orthophonic is by large the major portion of our business. [fol. 65] As to whether the Victor Company also makes a type of radio receiver in which they use a Western-Electric horn for the radio portion—I am pretty sure they do. That is the Orthophonic horn. With these radio receivers they are not using the cone loudspeaker. I cannot say what percentage of the total business in radio machines the Orthophonic horn type is. It is larger than the cone.

Cross-examination.

By Mr. Davis:

What we call the Electrola came on the market about February of this year. The price of Electrolas to the ultimate consumer is about four hundred and twenty-five dollars. There is another one about five hundred dollars and there is another one at about nine hundred dollars.

Deposition of Harry O. Sooy, for Defendant.

(The deposition of Harry O. Sooy, included by the above-mentioned stipulation, reduced to narrative form is as follows:)

Direct examination.

By Mr. Scull:

My residence is 265 Myrtle Avenue, Merchantville, N. J. I am superintendent of recording for the Victor Talking Machine Company. I have been employed by the Victor Talking Machine Company ever since it was organized. I started with Mr. Johnson before it was organized in 1898.

I have been connected with the recording department of the Victor Company since 1900.

[fol. 66] (The witness was shown a device and was asked if he knew what it was.)

It is a Stroh violin. This one, or one like it, was brought from Europe, I think, in 1903, by Mr. C. Childs who was then manager of the recording department. These violins were used by the Victor Company in 1904, and they have been used constantly since that time. As to its purpose,—we used it at that time because we could concentrate more direct to the recording horn the sound which we were trying to get on the records, while the regular violin spread in the air and we could not concentrate it to get it on the record strong enough. As to whether the device I have in my hand is the same as has been used by the Victor Company since 1904,—it may be one of them. It is either one of them or one exactly like it.

(The Stroh violin identified by the witness was offered in evidence as Defendant's Exhibit "B.")

NOTE.—The Stroh Violin is in evidence in this case as Plaintiff's Exhibit 33.

Testimony of Henry Stevens Tenny, for Defendant

HENRY STEVENS TENNY was called as a witness on behalf of defendant, was duly sworn, and testified as follows:

Direct examination.

By Mr. Loftus:

My name is Henry Stevens Tenny and I am president of [fol. 67] The Rola Company, manufacturers of radio loudspeakers.

The Rola Company has been engaged in the manufacture of Rola loudspeakers for about 4½ years, close to five years.

My first contact with electricity was as radio electrician in the United States Navy. I served four years principally in the Asiatic fleet and for about a year after being

discharged from the Navy I was Seattle manager for the Independent Wireless Telephone Company, which operated the radio installation on about three hundred shipping Board ships.

The Court: Have you any degree?
A. No, your Honor.

I have read and understand the patent to Maxwell No. 216,051 of June 3, 1879. I recently constructed a sounding board of that type. It is right there on the table. The actuating device which I applied to it is one of the large standard reproducing motor units that we use in practically all of our products.

Defendant's Exhibit 10.—The sounding-board identified by the witness is received in evidence as Defendant's Exhibit 10.

As to whether I made any other form of the Maxwell patent than the one I have just identified—I made one slightly simpler, one using a single side instead of the double side arrangement. (Witness identifies the modified form of Maxwell device made by him and referred to in [fol. 68] his last answer.) The actuating unit applied to the modified form of device is the same as in the other one.

Defendant's Exhibit 11.—The modified form of the Mexwell device is received in evidence as Defendant's Exhibit 11.

Defendant's Exhibit 12.—The patent to Dann & Lapp No. 338,660 of March 23, 1886, is received in evidence as Defendant's Exhibit 12.

I am familiar with the patent to Dann & Lapp No. 338,660, of March 23, 1886, and I have constructed a sounding board of the character shown and described in that patent.

The Court: What were these used for, this Maxwell patent and this one that you are talking about?
Mr. Loftus: This is for telephone purposes, and the Maxwell is for telephone purposes.
The Court: Proceed.

(Witness identifies the device which he constructed in accordance with Dann & Lapp patent.)

As to my understanding of the purpose of the device shown in the Dann & Lapp patent—it was a telephone transmitter, with features, particularly its diaphragm, which were applicable—and were so stated in the patent—to other telephony apparatus besides transmitters. Dann & Lapp's problem was to obtain a sufficient amount of energy from the human voice to operate the inefficient microphonic devices that were in existence at that time. The drawings of the Dann & Lapp patent show a telephone transmitter. As to whether I find anything in that patent [fol. 69] with reference to any other uses for the device there shown—on page 2, line 60, the patent reads: "Our improved diaphragm is applicable to other telephonic instruments beside transmitters." The only other telephonic instruments, besides transmitters that I am familiar with, that would be operative with sound waves in air are receivers or reproducers. The telephone receiver differs from the transmitter in operation only in the same way that an electric motor differs from an electric generator. A transmitter receives sound waves from the air, converts them into mechanical motion, and impresses them upon an electrical circuit, to vary the electric current in that circuit. A receiver is the exact opposite in its functioning, it takes the fluctuations of an electric current from an electric circuit, and converts them into sound waves in the air. In constructing the device which I have identified, I built it for receiving purposes.

Mr. Loftus: The device identified by the witness is offered in evidence.

Mr. Davis: I object on the ground that this is set up as part of the prior art; we have had no notice of it, and I do not see how the replica of the thing can be prefaced on the subject of the state of the prior act.

The Court: It will be received over the objection; if not competent the Court will ignore it in making up its decision. It will be in the record if the case goes higher. The [fol. 70] objection will be overruled.

Mr. Davis: Exception.

Plaintiff's Exhibit 13.—The device identified by the witness is received in evidence as Defendant's Exhibit 13.

As to the purpose of the sounding-board disclosed in the Maxwell patent No. 216,051—Maxwell's sounding-board is intended to function as does a telephone transmitter and a telephone receiver. He describes the use of two of his instruments which are replicas of each other, one used at each end of the telephone transmission line, and both used alternately or interchangeably as transmitters or receivers. The model that was offered in evidence was constructed for receiving purposes.

As to whether I have ever seen in use or on sale any sounding board of the type shown in Lumiere patents Nos. 986,477 and 1,036,529—I have seen a sounding board of that type on sale as a built-in part of the Victor loudspeaker that was marketed one or two years ago.

(Witness produces and identifies one of the devices just referred to.)

As to where I obtained this device—one of our employees bought it down town somewhere in Oakland. Its actuating unit is a Rola standard unit.

Defendant's Exhibit 14.—The device just identified by the witness is received in evidence as Defendant's Exhibit 14.

The Rola Company manufactures horns and cones and [fol. 71] also units, motor units with small diaphragms suitable for use with the air column chambers or cone chambers of phonographs. The conical sounding boards are mounted in three styles. We mount the unit in a circular baffle about 15½ inches in diameter, made of thick, hard wood; we also mount the unit and market it in a small cabinet about 12 inches in its over-all dimensions, and a third type is the same unit mounted in a large box which supported by four legs, and that box measures about sixteen inches square, and about eight or ten inches deep. (Witness is shown a device and identifies it as a Rola cone unit.) The Rola cone unit just identified is part of our product which we are manufacturing to-day.

Mr. Loftus: This apparently differs somewhat from the other device (Plaintiff's Exhibit 3) and I will offer this in evidence as Defendant's Exhibit 15.

Defendant's Exhibit 15.—The Rola cone unit identified by the witness is received in evidence as Defendant's Exhibit 15.

This device (Defendant's Exhibit 15) consists essentially of an electrical vibrating motor unit, which is attached to the apex of a cone approximately 7⅝ inches in diameter, of paper .0007 of an inch thick, and that cone diameter and paper, the material, the way it has been fabricated, have all been worked out over a period of several years to give a certain sound response when used in connection with this particular motor unit or electric vibrator, and in connec- [fol. 72] tion with the average radio set this device must be considered as an entirety, and not as a specific part. When this motor unit receives electrical pulsations, as, for instance, from a radio set, it converts those electrical pulsations into mechanical motion in the form of vibrations of varying frequency, and relative small amplitude. In use, that armature vibrates the apex of the cone to a distance not greater than .0015 of an inch. The result of that is to set up a series of waves of mechanical flexural vibrations in the conical-shaped diaphragm. These waves are extremely complex. When the instrument is used as a radio loudspeaker with the average radio set, the effect of these waves is to disseminate the energy that is received from the motor unit, which, in turn, has received it from the radio set; in other words, this device is a converter of electrical energy into energy in other forms. The effect of the vibration of this diaphragm by the motor unit results in converting part of that energy into sound waves in the air on both sides of the cone. It is possible, by suitable use and mounting of this device, to project a satisfactory proportion of these sound waves out into free air or free space. All of the energy that goes into the apex of that cone is not distributed out in the form of sound, in fact a very insignificant portion of the energy goes out, which is true of all sounding-boards. The rest of the energy, which is in the form of flexural vibrations, is absorbed, in a small measure, through the fric- [fol. 73] tional rubbing of the particles of the paper against each other; the balance is absorbed by the frictional effect of the limp leather ring at the periphery of the cone; in other words, electrically, we vibrate the whole power into

the box, some of that power is transmitted out in the form of waves, and the rest is absorbed in small part, in the cone, and in a great part through the absorbing action of that soft leather. This cone, like all sounding-boards, responds more readily to some tones or frequencies than others. Our problem is to compensate this response and offset it, as far as we can, by an opposite characteristic in our unit, and also by applying further frictional drag upon the motion of the diaphragm; in other words, the unit not only sets the cone into operation, into vibration, but the rest of the device controls that vibration to prevent setting up resonance to prevent blasting. An important part of this additional action is accomplished by the use of the thin felt covering which surrounds the back of the cone, and is separated a short distance, an inch or so from the cone. When the cone vibrates and moves the air, it has to pump the air which is on the back of the cone through the meshes of that felt; atmospheric air is at a pressure of approximately 15 pounds per square inch; consequently, for every motion, no matter how small or large, of the cone, we have a positive motion of air through this felt. In passing through the meshes of the felt, the air is restricted in its passage, and heat is generated in the felt, which dissipates additional [fol. 74] energy from the cone, and the result of this construction is we have a reproducer in which we can produce immediately adjacent to the front of the cone sound waves with relatively small variations in amplitude of all frequencies within 100 cycles per second to about 5,000 cycles per second.

To prevent frequencies above 5,000 cycles per second from being generated, we introduce into the electrical system an electrical filter, which prevents any current above 5,000 cycles per second from passing into the reproducing motor.

Q. Does that leather band at the base of the cone form any part of the sounding-board or tympanum?

A. Only in a very minor and imperceptible sense. The leather, while it has a certain amount of rigidity, its rigidity is absolutely insignificant compared to the greater rigidity of the cone diaphragm. In other words, when the cone moves forward, for instance, it will drag a very small por-

tion of that leather forward with it, but the rest of the leather, because of its inertia, and because of the pressure of air, will lag behind, and stay more or less permanent.

As to what portion of the entire diaphragm is depended upon for the reproduction of these sounds—the reproduction of sounds is confined almost entirely to the paper conical portion, and to perhaps one-eighth of an inch of leather contiguous to it. The diameter of the entire diaphragm from one edge of the frame to the other is about 8½ inches. [fol. 75] That is the only size of diaphragm that we employ in our construction of the cone. We have never constructed any larger than that for commercial manufacture.

The device that I hold in my hand (Defendant's Exhibit 15) is operative to reproduce the character of sounds that are required for commercial loudspeakers, only in a very limited sense and in a feeble degree. This operates over a certain band or range of tones, but not over the entire range of tones that is demanded by the market or the public that buys this quality of instrument. Due to the small diameter of that cone, when it moves forward it pushes the air ahead and it drags the air back with it. That air ahead merely slips out, down the outside of the edge, and back. The result is when the cone moves forward the percentage of sound radiated into the air is lessened because the air pressure or air wave which would form a sound in front is met by an air wave of opposite polarity back of the base of the cone. On a cone of this diameter, we have found this radiation would be limited to about 250 cycles per second; in other words, if the cone vibrated to a lower vicinity than 250 cycles per second, the dissipation of energy through the free passage of air around the edge of the cone would prevent a satisfactory radiation of those tones into the free air. A loudspeaker, in order to be satisfactory under present conditions in the reception of broadcasting should cover with reasonable efficiency, the frequency range of the broad- [fol. 76] casting station it is used with. We have found that broadcasting stations transmit with good fidelity all tones from about 100 to slightly over 5,000 cycles per second. As to how we make this small cone diaphragm operative to reproduce these low frequency tones—the cone itself, reproduces them. The problem in the use of the cone is to radiate these tones out into the air. We found that we radiated these tones satisfactorily by using the flat baffle

surface, with a box-like structure, which will entirely, or almost entirely, separate the cone, or at least separate the front of the cone from the back of the cone.

Q. In connection with the defendant's device, you mentioned a flat baffle, and I will ask you if such a flat baffle is represented in Plaintiff's Exhibit 3 as being one used in connection with your cone.

A. Yes.

Q. You also mentioned a cabinet as forming another type of baffle, and I will ask you if this structure which I show you is such a cabinet.

A. Yes.

Defendant's Exhibit 16.—The cabinet identified by the witness is received in evidence as Defendant's Exhibit 16.

Q. Did you ever sell these cone speakers without the baffle or the cabinet, that is, for use, without a baffle or a cabinet?

A. We have sold a considerable quantity of them to radio set manufacturers, and furniture manufacturers, who [fol. 77] mount them in various types of cabinets.

Q. But are they for use without the flat baffle or cabinet in practice?

A. There is nothing that would prevent them from the use of that, but I have never known of an instance of it.

Q. Have you ever heard of such use?

A. No.

The reason for employing a conical form of diaphragm rather than a flat diaphragm, for instance, is that a cone is a mechanical structure embodying great strength, with an economy of weight. It gives a convenient structure for getting strength without getting undue weight. In generating sound, where you have a very light substance in the form of air, we try to cut the mass of our vibrating diaphragm down as close to that air as we can. As to whether there are other ways of getting this rigidity than by conical forms,—the sounding-board of a piano is a thin sounding-board of wood, reinforced with a series of transverse members or battens, giving a very rigid, light system. A very rigid, light system could be made in the same way by using even lighter wood than is used in pianos, and a loudspeaker could be developed in the same way as it was done by

Lumiere (Defendant's Exhibit 14) in pleating the paper and getting the strength by the edgewise use of the paper. These pleats provide the rigidity. As to whether there is any acoustic advantage in the cone device, aside from the fact that it provides inherent rigidity—there is an acoustic [fol. 78] disadvantage because of its conical shape, but no acoustic advantage. A cone, in one sense of the word, is a modified horn, it is a small horn, and while the frequency natural to that shape of horn and that size like that would be very high, a noticeable defect developed in this; the cone will tend to radiate an excessive amount of sound at a particular frequency where that horn effect begins to operate.

I am familiar with the Hopkins' patents in suit. I have constructed a sounding-board like the Hopkins' patent in size comparable with the Rola loudspeaker.

(Witness identifies the sounding-board so constructed.)

The operating unit in this device is the standard Rola motor unit.

Defendant's Exhibit 17.—The sounding board identified by the witness is received in evidence as Defendant's Exhibit 17.

As to the structral differences and the differences in operation and effect as between the defendant's device and the device shown in the Hopkins patent in suit—both devices generate the sound at the apex of the cone, and in substantially the same manner. The sound vibrations are applied at the apex of the cone and set up flexural wave vibrations which radiate out from the apex from the cone to its edge, to its periphery. In the Hopkins construction he makes the periphery flat to form an annular rim and clamps it to a rigid frame of large mass. In our construction we interpose a flexible yielding and resistive membrane of kid [fol. 79] leather between the edge of the cone and the supporting rim. When considerable power is applied to a Hopkins type of cone, when it is made of small size, the energy that is applied to the apex is like all sounding boards, not entirely radiated off in the form of sound. It stays in the cone until at certain frequencies it increases to such an extent that it produces blasting and rattling. We have presumed that the rigid clamping around the edge of the cone was intended to prevent that rattling by rigidly

holding them, and we found that it does not prevent it, but only raises the frequency at which the cone will rattle. It increases the rigidity of the whole system, but it does not do anything to dispose of the energy which is the cause of the rattle. Our kid membrane is a flexible resistive material, which to a greater extent insulates the edge of the cone from the supporting rim. When sound vibrations reach that flexible kid membrane, the softness and yielding qualities of it cause it to absorb a great proportion of that sound, and cause it to absorb and prevent the bulk of that rattling. Our problem was to design a structure which would have the ability to radiate the desired frequency, and also to provide in the design a frictional control to control the amplitude of vibration that was built up in the cone. In the Hopkins structure, there was no such provision for control. In the Hopkins patent I find a provision for a baffle-board or other baffle effect, only in a very slight effect due to the iron [fol. 80] rings, but those rings are of rather small cross-section compared to their diameter.

I would say from my experience in this art that the smallest diameter that could be employed with success following the Hopkins construction, and getting the results that are required in actual practice in broadcast reception, would be about 20 inches—18 to 20 inches. The reason for that is we found that a baffle of about three feet square insulates the back waves from the front waves, at all frequencies used in broadcasting, that are transmitted to the average receiving set. However, we also found that a baffle three feet square was a cumbersome and unwieldy piece of furniture, and we trimmed the size of that baffle down to the smallest we could get, which we finally adopted at 15½ inches. I believe that a cone, to have an equivalent radiation effectiveness, would have to be at least as large as our baffle, and preferably larger than our baffle, and for the same reasons, that our baffle would be better if it would be larger.

In constructing a cone of less than nine inches in diameter, according to the Hopkins drawings and specifications, and without using the baffle, I noticed in operation that it tends to over-emphasize the higher-pitched notes. There is also a loss of radiation of sound. The loss of radiation of sound shows itself as a rattling tendency; in other words, the Hopkins cone of nine inches or smaller will

rattle very freely. If put into a baffle, it will not tend to [fol. 81] rattle quite so freely. More power can be put through it without getting the paper rattle.

In regard to the leverage employed in our device, Exhibit 15, in this model which I have been making and standardizing on for six months, the motion of the cone is greater than the motion of the armature. That is not true of the device which was introduced in evidence as Plaintiff's Exhibit 3. Plaintiff's Exhibit 3 is a cone that we manufactured over two years ago and in which we used a coupling between the motor unit and the cone which gave the cone a slightly smaller amplitude of vibration than that of the armature.

Referring to the British patent to Brown, No. 29, 833, the leverage therein imparts a shorter movement to the cone than the movement which is impressed upon it. As to the condition in regard to the leverage in Lumiere patent No. 986,477—I would have to scale this to make absolutely sure, but to the eye it looks like a very slight stepping down; in other words, the distance from the fulcrum to the needle point is a little greater distance than it is from the fulcrum to the end of the needle which connects to the diaphragm.

Q. Have you facilities here for demonstrating the operation of these various devices which have been offered in evidence and identified by you?

A. Yes. We have an electrical pick-up.

Q. Is there any question that they all operate?

A. No.

Mr. Loftus: I imagine the plaintiff will contend that these [fol. 82] models of the early patents are inoperative, and I want to make a demonstration of that. We have facilities present here.

Mr. Davis: I would not expect them to be inoperative; whatever these gentlemen have made up, I assume that they were made so that they will work.

The Court: That is what they were made for, I suppose.

Mr. Davis: I suppose so.

Mr. Loftus: There is one other demonstration, I think, which is quite important.

The Court: Proceed with it briefly.

Q. Will you kindly demonstrate this device which has been offered in evidence as Defendant's Exhibit 17, which

represents the Hopkins construction in small size, and compare the same in operation with the Rola cone, both without and with a baffle.

The Court: Can it be done briefly, Mr. Witness?

A. Yes.

The Court: Do not take long.

Mr. Davis: As I understand it, they have made up some device which is different from the Hopkins patent, and now they are going to demonstrate that. I do not see the pertinency of it.

The Court: It is part of their case.

(Witness demonstrates Defendant's Exhibit 17.)

That test showed to us that at the proper time, this disphragm, notwithstanding the fact it is rigidly clamped and [fol. 83] built according to the Hopkins patent, will rattle and blast. The cause of the rattling is inefficient damping, in other words, there is more energy going into the cone than can be radiated off in the form of a column, with the result that it fills up on certain notes and snaps the paper and rattles. We eliminate that in part by a leather edge, and also by the use of felt covering the aperture around the cone to restrict the flow of air. As to whether the presence or absence of a baffle would enter into that—a baffle will minimize the rattle to a slight extent.

Q. Will you kindly demonstrate the Defendant's device both with and without the baffle?

A. Yes.

(Witness demonstrates Defendant's Exhibit 15 without a baffle.)

According to that test, our device on the same input does not rattle, either with or without the baffle, whereas the Hopkins device would rattle upon that in-put. We have found by tests in our laboratory that upon applying still greater power the one without the baffle will rattle, but at that rate of power the one with the baffle will not rattle. The test also shows us a much deeper and rounder tone with a baffle cone than from a cone free and without a baffle. That test as to the difference with and without a baffle would be more pronounced with a larger baffle.

Q. Have you such a larger baffle, so as to accentuate the difference in the function and advantage of the baffle in a larger size.

A. Yes.

[fol. 84] (Witness demonstrates Defendant's Exhibit 15 when supplemented by a larger baffle.)

That test showed a noticeable increase in volume with the baffle and a much better reproduction at a lower frequency.

As to whether I have any tests that will more clearly accentuate the rattling effect which will be developed by a cone such as Defendant's Exhibit 17 and our own device, Defendant's Exhibit 15. We have an electrical device for generating a pure tone of any desired frequency within the broadcasting range; in other words, between 100 and 5,000 cycles a second. I can connect that device up and put a constant tone through any speaker and operate it, and by properly watching these tones I can demonstrate the frequency at which the various speakers will rattle. The implement that I employ for that purpose is what we call a beat frequency audio oscillator. It consists of two vacuum tubes, both oscillating at a very high frequency, and a frequency so high that they are inaudible to the ear, and by varying the frequency of one of the tubes we vary the corresponding beat frequency between the two tubes.

If one tube has a frequency of 45,000 oscillations per second and the other 46,000 the note generated by the oscillator will be the difference between them or 1,000. By varying the frequency of one of the tubes, we vary the corresponding beat frequency between the two tubes. I can start the [fol. 85] frequency at zero and bring it up continuously, zero meaning no frequency at all.

(Witness demonstrates Defendant's Exhibit 17, in connection with the beat frequency audio oscillator.)

The cause of that rattling or squeaking is the snapping of the paper at the end of the cone, due to the fact that there is insufficient provision for drawing the energy away from the cone that is applied into the cone. The energy expends itself in part by snapping the paper.

Q. Can you make that same test on the Rola cone, Exhibit 15?

A. Yes.

(Witness makes the same test on the Rola cone Defendant's Exhibit 15.)

The frequencies used in this test cover a range from zero to about 8,000 per second. As to whether I noticed any rattling or speaking—I noticed a very slight resonance effect, but no blasting. The reason for that is because we have absorbing facilities in this construction, in the form of an absorbing rim, and a felt damping exit for the air behind the cone. In other words, we dissipate mechanically the surplus energy out of the diaphragm.

Q. Will you operate this Lumiere device and compare that with the model of the Hopkins cone that you operated awhile ago?

(Witness demonstrates Defendant's Exhibit 14.)

This one blasts, but it is not the diaphragm blasting, it is due to the fact that this motor unit is not fitted to driving [fol. 86] that form of diaphragm, the armature vibrating such a great distance at exereme power. We could correct that by placing the unit to match that particular form of diaphragm.

Q. Will you operate Defendant's Exhibit 13, which you state is a model of the Dann and Lapp patent?

A. Yes.

(Witness demonstrates Defendant's Exhibit 13.)

The device suffers from the same fault as the Hopkins construction, in that there are not sufficient damping facilities on the diaphragm. In constructing this, we followed, as closely as we could, the specification of the original patent. We could improve its performance by providing somewhat greater number of felt bands resting on the diaphragm and damping out the surplus energy which produces a slight rattle.

Q. Will you operate this Maxwell device, Defendant's Exhibit 10?

A. I would like to say that this device has been damaged in handling in bringing it over here, and in order to make it operative I will have to put a slight tension on the me-

chanical parts back here. The part that supports the unit has been bent in. By holding it in my hand without touching any other part of the device, it will hold the unit in position.

(Witness demonstrates Defendant's Exhibit 10.)

That seems to reproduce in the same manner as all cone type loudspeakers; this particular model suffers because it has been slightly buckled—we corrected that when we made a later model. This slight buckling in the cone sur- [fol. 87] face produces that very faint sound with certain tones. As to what elements enter into that sounding-board construction, we have the cone, we have a tympanum consisting of a flat annular surface with the center cut out, and to which fitted a cone made of rawhide. This particular model is made of a banjo head, which we purchased flat and which we made into this shape in accordance with the patent to Maxwell. The diameter of the base of the cone is exactly the same as our regular cone, 7⅝ inches. The Maxwell patent specifies a diameter of between 7 and 8 inches.

Q. Have you completed the operation of the modified form of Maxwell?

A. Yes.

Q. You may state now your reason for constructing it in that form.

A. Maxwell uses two diaphragms, one on each side of the box; we are only interested in one, because we are interested in duplicating the sound in one direction, only. Therefore, in this box we have left off the back diaphragm, connecting the unit directly to the other one.

Q. Is it essential to the operation of the Maxwell patent that two diaphragms be employed?

A. Oh, no.

Q. What is your reason for saying that?

A. Well, he actually only employs one as a device for picking up sound waves. In other words, in the Maxwell construction we have two devices connected together by a string to comprise the mechanical telephone system; you [fol. 88] talk into one and you hear it in the other; you only talk into one diaphragm; the other diaphragm on the other

side was inoperative, and merely sufficed in the way he built his diaphragm——

Q. Can you operate that device for us?

A. Yes.

(Witness demonstrates.)

This device is superior in over-all performance, to our minds, than the equivalent Hopkins construction, in that with the use of this larger surface there is more radiating surface, and, consequently, more baffle. The use of the thin wood gives a better form of tympanum than paper, in that the wood, having thinness and softness to it has an internal friction within itself which tends to absorb and damp out the surplus energy of the cone. For that reason, this construction will not rattle with power, as will easily rattle this construction.

On the model of the Dann and Lapp patent, the diameter of the cone is about four inches. As to how we arrived at that size—the patent was not clear as to the size of the cone used, and I tried to approximate the size that was intended by the original inventor, by analyzing the problems that they had before them: in those days there were no highly sensitive microphone devices, such as we use nowadays in telephony. Their problem was to obtain a larger amount of energy from the voice to operate an insensitive microphone and from reading that patent through I got the impression that what they thought and what they did have in [fol. 89] view of accomplishing was a means for getting a lot of energy out of the use of a comparatively large diaphragm, in which they got stiffness by having part of it in a conical shape.

Q. Do you find that a cone of that size will reproduce these so-called self-sustaining sound waves without the aid of a horn?

A. Oh, yes.

Q. That was demonstrated here in the test when you removed the horn, was it?

A. When I removed the horn it changed the directivity of the sounds, but not their intensity; there was a difference which was very imperceptible.

Q. Can one of these loudspeakers be used as a transmitter?

A. All of them can.

Q. How is that done?

A. In the same way that the original Bell telephone was both a transmitter and receiver; a loudspeaker, in the final analysis, is only an overgrown telephone receiver. It does exactly the same thing that a telephone receiver does, in that it converts electrical energy into sound energy, and, inversely, if you talk into a loudspeaker, you will generate an electric current in the winding; in the same way, when you talk into Professor Bell's telephone receiver, it acted as a transmitter. The first Bell telephone system was two receivers, one at each end of the line, which acted both as transmitters and receivers.

Mr. Loftus: That is all.

[fol. 90] Cross-examination.

By Mr. Davis:

Q. Mr. Tenny, I understand that you started in this business with the Rola Company about four and a half or five years ago?

A. Yes.

Q. You were making horn loudspeakers, at that time?

A. Yes.

Q. Were not making cone loudspeakers?

A. No.

Q. When did you start making cone loudspeakers?

A. About two and a half years ago.

Q. Were you then still making horns at the time you started making cones?

A. Yes.

Q. Do you continue to make horns to-day?

A. Yes.

Q. Will you give us some idea of how the manufacture of cones has grown in quantity in your business, as compared with the sale of horns?

A. In the United States the manufacture of horns has diminished in number of horns, but I do not believe that it has diminished, at least, until the last month or so, anyway, in the dollars and cents value of the horns produced.

Q. The question was about your business, Mr. Tenny.

A. In our business, we decided at the height of the cone popularity, instead of manufacturing the type of horn which then was desirable, which was a long horn, to restrict our efforts to the manufacture of cones in order to simplify [fol. 91] our line. The result is, we sell very few horns at the present time in comparison with the number of cones sold in the United States. In Japan we sell nothing but horns.

Q. That is, as I understand it, at some period of time you made this decision that you speak of—what was that period of time?

A. That was at the time the Western Electric Speaker came out and practically killed the horn business.

Q. This Western Electric speaker that you have been talking about is of this type that I have in my hand, and that is marked in this case, "Western Electric Speaker," held not to be an infringement in Lektophone vs. Western Electric?

A. Yes.

Q. What date was that?

A. I don't remember exactly, but my recollection is that it was about three and a half years ago that the Western Electric cone came on the market; it followed several other cones which had come on, and left apparently no impression on the market, one of which was the Pathe cone.

Q. What I am trying to get at is the date; I asked you what date it was.

The Court: About.

A. The date the Western Electric came on the market?

Q. The date that you made this decision, when you say you decided to stop making horn loudspeakers and devote yourselves to making cone loudspeakers?

A. It was in December, 1924.

Q. You said that you made that decision in preference to [fol. 92] modifying your horn. What did you mean by that?

A. The public demand grew for low notes, which could be obtained by lengthening the horn, which has been done in the Victor Orthophonic phonograph; that brought the horn into a higher classed price of merchandise, and we decided to make the cone, which would accomplish, to a certain extent, the same purpose.

Q. As I understand it, you sell to the trade today, or have sold to manufacturers of radio receiving sets, mechanisms like Plaintiff's Exhibit 3?

A. Yes.

Q. That is, by outright sale, and you retain no control over what they do with them after they get them?

A. Yes.

Q. You spoke, Mr. Tenny, about the effect of the felt which appears on Defendant's Exhibit 15; you spoke of that at some length, didn't you?

A. Yes.

Q. There is no such felt in the device like Plaintiff's Exhibit 3?

A. No.

Q. When did your company begin putting that felt on these devices?

A. About December, 1927.

Q. You understand, do you not, Mr. Tenny, that the flexibility of the supporting rim of these cone loudspeakers has something to do with how well they operate?

A. Yes.

Q. Now, referring to Defendant's Exhibit 17, as I understand it that device you made up by first making a cone the [fol. 93] size of the defendant's cone in its regular speaker, that is having a diameter of 7.5 inches at the base—is that right so far?

A. Slightly greater than 7.5.

Q. And then you supported that in rings. How did you determine the diameter of those rings?

A. The inner diameter is about the same as the outer diameter of our present felt support, our present leather support.

Q. Then you bridge the distance between the edges of the cone and the clamping ring by this flat paper rim?

A. Yes.

Q. Thereby making a flat paper rim of the same width as your flexible leather rim?

A. Yes.

Q. And in doing that you support this cone by a rim which was narrower than the Hopkins patent indicated, didn't you?

A. I am not just sure what Hopkins indicated.

Q. I will put it this way: If, instead of using this narrow paper rim, if you had made the over-all diameter of the ring 9 inches, and kept the cone the same size that you had it in this Exhibit 17, you would then have a wider flat rim than you now have, would you not?

A. Yes.

Q. And that wider flat rim would have been correspondingly more flexible, would it not?

A. Yes.

Q. Have you ever made up any devices with a cone of exactly the same size as the cone in defendant's device, with a supporting rim of the same material, but made correspondingly wider, so as to get the greater flexibility, and tried to find out whether such a device would have this blasting?

[fol. 94]

A. We did not do that, because we did not want to follow that line of work, because it might infringe existing patents.

Q. Now, in this Maxwell device, which is Defendant's Exhibit 10, please direct your attention to that and turn to the Maxwell patent; as I understand it, your device, Defendant's Exhibit 10, is intended to be a replica of what is shown in Fig. 1 of the Maxwell patent?

A. Yes.

Q. Did you ever attempt to make a replica of what is known as Figure 2 of the Maxwell patent?

A. No.

Q. You understood, did you, that it is of the device shown in Fig. 1 that the patentee speaks in the first column of the specification?

A. Yes.

Q. And that the invention of the patent No. 216,051 is the device shown in Fig. 2?

A. Yes.

Q. Then, as you understand, when the patentee says, "Now, my invention herein claimed relates to the construction of a vibratory apparatus of quite different form and of a much better result from the one hereinbefore described," he meant that the device of the much better form was the device of Fig. 2?

A. Yes.

Q. In your Exhibit 10, are the vibrators stretched and held taut by means of buttons?

A. On the wire, as in the Maxwell Figure 1, there is a wood button on one side, and a small metallic cap on the other side, but it is in the same position as the wood button. [fol. 95] The wood button would function exactly the same way.

Q. Are they stretched and held taut?

A. Yes.

Q. Are they such a material that but for the buttons and the wires stretching them taut the vibrators would collapse when the wire was relaxed?

A. What you have just read refers to the second invention, not to the construction we made.

Q. What I have just read is from the second page, first column of the patent, where Maxwell says, "The vibrators are stretched and held taut by means of the button e the wire T; and but for the button i on the wire outside of the box, the vibrators would collapse when the wire was relaxed." Now, I ask you if the vibrators in your Exhibit 10 would so collapse when the wire was relaxed?

A. The vibrators on this will not collapse when the tension is relaxed.

Q. Do you understand what Maxwell says or meant when he said in the following paragraph: "In this construction it will be observed that a larger portion of the appartus is made of the sheepskin or other animal membrane, and there is in it no more wood, which is itself, capable of a high degree of vibration, than enough for a frame to hold the vibrators in position and in proper shape, and that it is, therefore, very efficient for the purpose of condensing and strengthe-ing air vibrations for transmission."

A. That is true of Figure 2, but this is made in accordance with Figure 1.

[fol. 96] Q. You understand his idea in the construction of Figure 2 was to reduce the wood to a minimum?

A. Absolutely.

Q. And that, for the purpose of condensing and strengthening the air vibrations?

A. That was to reduce his mass.

Q. So that, when he talked into the hollow chamber of Figure 2 he would get a better transmission?

A. For his purpose he would probably get it.

Q. I want to have it appear in the record, if you will help me, that when you were testing the defendant's speaker with the baffle, the thing you were testing was Defendant's Exhibit 16, in which the baffle is in the form of a cabinet; that is right, is it not?

A. Yes.

Q. As I understand, you agree that in these cone devices, if there were no support for the edge of the cone, and then you vibrated it with these sound currents, as you have done here in your exhibition, you agree that the edge of the cone would then weave and rattle?

A. Not necessarily, no.

Q. What do you mean by "not necessarily"?

A. Because it is a very simple matter to build a cone that would not weave and rattle, within the same range that that won't weave or rattle.

Q. By "that" you mean Defendant's Exhibit 3?

A. Yes.

Q. Of the same size?

A. Of the same size.

Q. What sort of paper would you use?

A. I would use a thicker paper; I would slightly cor- [fol. 97] rugate the edge of it; that is assuming that it is operated in absolutely free air.

Q. Let me put it this way: If you take the rim off of this device, Plaintiff's Exhibit 3, the edge of the cone would weave and rattle when subjected to the energy that this device Exhibit 3 is subjected to in practice, would it not?

A. I presume it would. I would not say.

Q. You agree that the effect of the flat rim which extends from the cone to the frame, is to prevent such weaving and rattling?

A. To absorb the surplus energy from the cone.

Q. Now, you could prevent any weaving and rattling of the edge of the cone by fixing it rigidly to a frame, could you not, without any interposed flexible rim?

A. No. The cone will rattle at higher frequency. You merely pitch up the rattling point.

Q. Why don't you support your cone by a rigid frame clamped directly to the edge of the cone, instead of having this interposed flexible rim?

A. To enable the cone to vibrate freely and move freely.

Q. That is, if the edge of the cone was supported to a rigid structure it could not vibrate freely, and could not produce sound freely: Is that true?

A. It could produce sound at certain frequencies.

Q. But not low?

A. But not the lower frequencies.

Q. You spoke about the energy consumed in the opera- [fol. 98] tion of these devices. Now, as I understand it, when you move this cone back and forth aga-nst the air, there is a consumption of energy by the movement of the cone against the air: That is true, is it not?

A. Yes.

Q. And at least part of that energy becomes sound waves: That is true, is it not?

A. Yes.

Q. And I suppose to whatever extent the rim moves there is some similar consumption of energy: Is that right?

A. Yes.

Q. And then, as I understand it, you say this energy is absorbed in the band of this leather rim of your: Is that right?

A. Yes.

Q. There is also energy absorbed in the band of the paper of the cone itself, isn't there?

A. Yes.

Q. Have you made any measurements from which you can say what part of the total energy is absorbed by each one of these different things?

A. I have not, no.

Mr. Davis: That is all.

Redirect examination.

By Mr. Loftus:

I was asked about a free-edged cone on cross-examination. As to whether I have constructed such devices and tested their operation—we have constructed a cone in which the edge was not rigidly clamped. It functions practically, in fact, absolutely the same as our standard construction. I have such a device here.

Defendant's Exhibit 18, device produced by witness, is received in evidence as Defendant's Exhibit 18. In this [fol. 99] exhibit the cone is supported as follows:

The cone has pasted to its edges the annular rim of thin kid, at the outer edge of which is sewn a very light aluminum ring; that ring serves the function of holding the kid in approximately flat shape, and holds it all in one plane. That ring, in turn, is supported by three very small threads about three-quarters of an inch long, leaving the ring entirely free.

Mr. Loftus: That is all.

Recross-examination.

By Mr. Davis:

Q. Mr. Tenny, I have in my hand the loudspeaker portion of a Radio Corporation of America Loudspeaker 100A; do you recognize it?

A. Yes.

Q. That cone is made of paper, and it has corrugations, concentric corrugations in the body of the cone, and I notice that you have concentric corrugations in the body of your cone. Have you put your concentric corrugations in after the Radio Corporation came out with this 100A?

A. Yes.

Q. I notice that the 100A has felt covering the openings in the supporting frame: Did you also put felt in your speakers after they came out with this felt?

A. Yes.

Mr. Davis: That is all.

[fol. 100] Testimony of Peter L. Jensen, for Defendant

Peter L. Jensen was called as a witness on behalf of defendant, was duly sworn, and testified as follows:

I reside in Alameda, and am engaged in the manufacture of radio loudspeakers. In 1902 I obtained a position with Vladimir Poulson, who was the inventor of the system of

wireless telegraphy, and I was with him until 1909, after he engaged in wireless telephony and wireless telegraphy; and in 1909 I came to the United States and was actively engaged here in radio telephony, and since 1911 I have been engaged in the manufacture and experimenting with telephones, particularly loudspeaking telephones, except for a period from 1925 to 1927, when I was not doing anything in this line. I was chief engineer of the Magnavox Company from 1911 to 1925. I was one of the original patentees of the Magnavox loudspeaker. The name of the concern I am now connected with is the Jensen Radio Manufacturing Company.

As to my understanding of the term "tympanum" as used in the telephony art—a tympanum is, according to the understanding among acoustic and telephone engineers, a stretched diaphragm which will emit a soundwhen vibrated. The tympanum of Defendant's Exhibit 15 is the stiff part, which, in this case, is the paper. As to whether the kid [fol. 101] leather band is a part of the tympanum—if I were speaking to a body of acoustical engineers,or electrical engineers, and tried to tell them that this was a tympanum, that soft kid leather, I think they would smile at me.

The purpose of the soft kid leather is to hold the cone in position, and also to prevent the sound from the front part getting over to the back of the cone. The effect when the sound from the front gets over to the back of the cone is that it eliminates or kills off the low notes.

The device that I hold in my hand (Defendant's Exhibit 15) is not in my opinion a complete loudspeaker, such as could be successfully marketed to people who employ them for the reception of radio broadcasting. A baffle is lacking on it. It would not be commercial under any circumstanes. A baffle is a medium which you put around the cone and it prevents the waves emitted from the front from reaching the back, due to a compression on the front at the same time as a rarefaction on the back of the cone.

I have had several years of experience with baffles in connection with loudspeakers. I have found that in order to have a loudspeaker of this type operate properly, the baffle must be one-quarter of the wavelength of the sound emitted. that is generally accepted by the engineers. The reason for

that is this: by the time the wave which is emitted from the front reaches the back, no rarefaction must exist, the cone must move back so there is no back action, otherwise the air [fol. 102] would tend to creep in. As to how I would arrive at the proper size for a baffle in a cone like that—in some of the best commercial loudspeakers to-day we have found it necessary that they should reproduce down to about 64 cycles per second, which is two octaves below middle C. That would require a baffle four feet in diameter. That is determined because it is two feet from the front to the edge of the baffle, and two feet down to the back. The baffle can be in the form of a cabinet as long as the total distance is four feet.

As to what is the reason for employing a conical form of diagram in these loudspeakers—it has been known for a great many years that to get a very light tympanum it ought to be made into a conical shape, to give strength. This was used in the old mechanical telephones, which were even used before the invention of the telephone in 1876. There might be other ways to get the lightness and rigidity aside from the cone, but generally a cone is used because it is such an old and well-known device. That rigidity is approximated in a pleated structure like Defendant's Exhibit 14. Considered purely from the acoustic standpoint, there is no merit in the cone over any other shape of diaphragm as long as the weight is approximately the same.

As to whether I am familiar with any of the old telephone patents, where they employed conical diaphragms—I am familiar with the patent issued to Dann and Lapp, No. [fol. 103] 338,660, over 40 years ago. That, in my opinion, is such a device as could be used successfully as a loudspeaker. My reason for that opinion is that I have heard one operate. As to whether the patent has anything to say about loudspeakers—it mentions in here, that particular word. (Witness reads from the patent:) "The object we aim at and have attained is the production of a loudspeaking instrument." I think perhaps that is the first time that a loudspeaker is used in the art, 42 years ago.

Mr. Loftus: That is all.

Mr. Davis: No cross-examination.

Testimony of E. G. Danielson, for Defendant

E. G. Danielson was called as a witness on behalf of defendant, was duly sworn, and testified as follows:

I reside at 945 Faxon Street, San Francisco. I am engaged in the manufacture of radio parts. I have been connected with the radio industry for 23 years—nine years in a commercial way. As to what experience I have had in radio or kindred arts, such as telephony,—I have had 15 years experience with the production and manufacture.

I do not know what the expression "tympanum" means in the telephony art.

Q. You cannot give us a definition of "tympanum"?

A. I can give you my understanding of it.

[fol. 104] Q. What is your understanding of it?

Mr. Davis: I object to that——

The Court: He may state. Objection overruled. Aren't there definitions of the word in dictionaries, or encyclopedias?

Mr. Loftus: Yes, but I am bringing out from the witness his understanding of the meaning.

The Court: Proceed.

A. My understanding of it is that it is a stretched diaphragm, similar to a diaphragm on a drum, and when it is vibrated it emits a sound.

I would not classify the limp leather portion in Defendant's Exhibit 15 as a tympanum. As to the function of the limp leather portion—I would say that it is to support the cone and to prevent the slippage of the cone, or in other words, prevent the energy created at the back of the cone from counteracting the energy created at the front of the cone.

The device which I hold in my hand (Defendant's Exhibit 15) as it stands, is not an operative structure such as could be successfully marketed, because it would not reproduce with efficiency low frequencies, for the reason that the energy from the rear of the diaphragm would counteract so much of the energy from the front of the diaphragm. The general way to correct that it to use a baffle-board. My idea

of a baffle-board is some material interposed on the center line between the rear and the front part of the cone, to lengthen the path. It is not necessary in the larger sizes [fol. 105] of cones to employ these baffle-boards. The reason for that is that the cone itself acts as a baffle-board. The bulk of the energy is transmitted from the central portion, the remaining portion acting as a baffle.

The particular area of the cone which functions normally to give off the vibrations and the distance from the apex which these vibrations ordinarily extend, in the lower frequencies, depends on the amount of energy put into the cone and the thickness of the cone. With the average cone, under normal use, in broadcasting reception, the bulk of the energy is dissipated within ten inches, ten or twelve inches. As to whether it would be true that with a cone ten inches in diameter a baffle would be essential, whereas in a cone exceeding that diameter the remainder of the cone, itself, would function in place of the baffle—I would say it would be essential to have a baffle on a cone under ten inches, if an attempt were made to market it on today's market. It would not be so essential to employ a baffle with a cone exceeding ten inches. I know of cones exceeding ten inches where no baffles are used.

Mr. Loftus: I think that is all.

Cross-examination.

By Mr. Davis:

Q. Mr. Danielson, the matter of use of baffles on these cone loudspeakers is a recent development in the art, is it not?

A. Yes, as far as the loudspeakers are concerned.

[fol. 106] Q. That is what you had in mind when you spoke in your testimony as you did, of the market of today; that is, when you said that these things are not salable on the market of today, you mean that because today the market demands an added improvement of a baffle. Is that right?

A. Yes, the market of today requires a greater frequency range of reproduction.

Q. That is, it requires a lower frequency than it used to?

A. Yes.

Q. And lower than the old horns would give?

A. Yes, or the old cone speakers.

Q. By the last part of your answer you mean that they used to make cone speakers that did not give so low a response as the new speakers with the baffle; is that right?

A. That is correct.

Q. When you say "used to," you have reference to manufacture of two or three years ago?

A. Yes.

Q. Do you manufacture cone speakers?

A. No, we do not.

Q. Do you buy them?

A. No, we do not. We do not buy them for retail, if that is what you mean to imply.

Mr. Davis: That is all.

If your Honor please, I have just sent out and bought here in San Francisco a loudspeaker which is marked "Jensen Dynamic Speaker," and if it will be admitted by the other side that this speaker is of the manufacture of the last witness, Jensen, it would save some cross-examination.

[fol. 107] Mr. Loftus: Yes, he said he manufactured speakers. This looks like one of his.

The Court: Have you concluded with this witness?

Mr. Davis: Yes.

Defendant's Exhibit 19.—The patent to W. H. Davis and F. E. Joss, No. 1,389,632, assigned to Lektophone Corporation, the plaintiff in this case, was received in evidence as Defendant's Exhibit 19.

(It was stipulated that this is a patent in which W. H. Davis, counsel for plaintiff, is a coapplicant.)

Rebuttal Testimony on Behalf of Plaintiff

Testimony of Marcus C. Hopkins, for Plaintiff (in Rebuttal)

Marcus C. Hopkins was called as a witness on behalf of plaintiff, was duly sworn and testified as follows:

Direct examination.

By Mr. Davis:

I am the inventor and patentee of the two patents here in suit. As to the circumstances under which I made these inventions—I was engaged in designing and building sound reproducing devices in Newark, New Jersey, and, being very much interested in it, I later went to the point of greatest activity at the moment, which was the Edison laboratories, at West Orange, and there entered the em- [fol. 108] ploy of Mr. Edison, in investigating what you have spoken of as the sound-box and horn combination devices, which he was very anxious to perfect at that time, and produce in a more compact form. My work under Mr. Edison continued for about two years. That time had to do with the investigation of the sound-box and horn combination. The result of the experience I then acquired is correctly summarized in my patent No. 1,271,529, page 1, lines 27 to 66. After that experience with the sound-box and horn combination, I turned to an investigation of direct acting devices, such as sounding boards, which led me to the cone type of structure which forms the subject matter of my patent. As to the sort of sounding board structures I tried out—when I first decided to turn to an investigation of those devices, of course I started with the well-known things in existence at that time, which was a piano sounding board, zither, guitar, and musical instruments which employed the regular sounding board; but we very shortly found that these were not suitable for the purpose, they all had too much inertia, and I began to build lighter sounding boards of my own design, and continued to make them lighter, until I got to make them of paper. I made a considerable number of paper structures, and eventually arrived at the cone type.

As to what experiments I made with the cone type of speaker before I filed my patent application—when I first [fol. 109] began the use of the cone, with the idea that it was a light and very stiff structure, it almost immediately showed a big advance over any of the other structures that we tried. I started a long series of experiments with different sizes, different materials, different angles, and in the

course of that series of experiments it narrowed down to practically one type of cone, and which is the general type given in the patent 1,271,529. The use of the cone was limited by the waving or rattling that invariably accompanied a simple cone, and we tried different angles and different materials, but we never got away from the fact that the edge would break up into nodes, even with the small amount of energy that we had available in those days. When the cone vibrated, the outer edge of the cone would break up into nodes or loops, the nodes being the comparatively still portions which moved with the movement of the cone, but the loops the portions in which one wave was going out while another was going in. In other words, it was a bell motion of the paper of the cones.

The article entitled, "The Vibratophone," in the "Talking Machine News," which is in the binder of prior art patents (Defendant's Exhibit 9), shows a simple cone in the sense in which I have used that expression, that is, a simple free-edge cone of the type we were working with at that time and which shows these edge nodes and loops.

Q. Did you hear these noises, as well as see them?

[fol. 110] A. Yes, they resulted in what then, and had been for some time, known as blasting.

Q. What did you do to overcome that trouble?

A. I began to support the edge of the cone, to prevent vibration, and that problem had to take into consideration that we must allow the cone to move axially to have it play; in other words, we wanted the axial movement without any breaking up of the edge. So we put a flexible edge on the cone, and supported that upon a rigid support.

Q. Now, in your patent, Mr. Hopkins, in patent 1,271,529, at the bottom of the second column of page 2, and the top of the first column on page 3, I find this stated:

"While I prefer to construct the tympanum in the form described and shown with a smooth surface, especially in view of the ease of construction, yet it is possible to form radial or concentric corrugations in the plane peripheral portion 1, and produce a light, stiff, and very satisfactory article for the purpose."

Q. Did your experiments include the forming of the radial and concentric corrugations in the plane peripheral portion?

A. Yes; we tried both radial and concentric, and when radial corrugations were used it stiffened the rim, and when concentric corrugations were used it made the rim more flexible.

Q. What effect did that have upon the operation of the device, as a whole?

A. Well, it permits some control in the use of the ma- [fol. 111] terials that were used, and permitted some variation in the width of the outside rim.

Q. And did this change in the width and flexibility of the rim affect the acoustic operation of the device?

A. No; the structure of the outside rim was intended to produce the required functioning characteristics, but it affected the space that was taken up by the outside rim.

Q. Now, are the functional characteristics of the rim correctly stated in the patent 1,271,527 as follows—I will read from page 3, line 124:

"The plane peripheral portion 1 of the tympanum maintains the place of the conical active portion of the tympanum, and yields sufficiently to permit of the required motion of the conical portion, resisting, however, displacement of the conical portion in just that degree necessary to maintain the form and neutral position of the active conical portion."

A. Yes.

Q. Now, suppose you made the rim too stiff, that is, stiffer than was necessary to be efficient, to effect that purpose, how would that affect the device?

A. That would suppress the activities of the cone, and reduce the efficiency of the structure.

Q. Is there such a thing as making the rim too flexible?

A. Well, theoretically, I would say that it could be made too flexible, but I have never found a case where a practical [fol. 112] rim that was applied to a cone that was yet too flexible.

Q. In your patent No. 1,271,527, in the second line and following, on page 4, you say:

"Were the plane peripheral portion 1 of considerably greater width or markedly narrower than described, its function would be destroyed to a degree corresponding to

the remoteness of the departure from the approximate proportion given, and the effective portion of the conical portion of the tympanum would be proportionately lessened."

What is the meaning of that last sentence?

A. If you made the outside rim too wide, speaking in terms of its being a portion of the tympanum, if you made the rim too wide that would lessen the area of the cone, which is really the important active element.

Q. What would be the effect if you clamped the edge of the cone directly in the clamping ring without an interposed flexible ring?

A. That would suppress the activities of the cone nearly altogether, and it would become very, very inefficient, practically nothing.

Turning to the subject matter of claims 29 and 30 of patent 1,271,527, that is, the lever reduction idea, I will describe its purpose and effect. The object of the lever reduction was to accomplish an efficient connection between the driving element and the cone. We found that, to produce the highest efficiency, it was necessary to reduce the [fol. 113] motion between the driving element and the apex of the cone, and that this was practically true in every condition that we investigated. The sound-box and horn combination, to get the same efficiency, or the best efficiency, was always a step-up leverage.

As to whether I ever built a device exactly like that illustrated in the two patents in suit—that device actually existed and the drawings that are in the patents were made directly from it. It was a machine which actually played and was demonstrated by me.

My interest in the plaintiff corporation is that I am a stockholder and a licensee. I own part of the stock and I got that for my invention. It is somewhere around 17%.

Mr. Davis: That is all.

Cross-examination.

By Mr. Loftus:

Q. In your work in the Edison laboratory, did the Edison Company become interested in your sound regenerator?

A. I did not come in contact with the Edison Company, as I was working personally for Mr. Edison.

Q. Is it not customary, there, when you enter the employ of Mr. Edison, that you have an agreement to assign your inventions to your employer?

A. It was never done at that time, the occasion never arrived.

Q. As a matter of fact, Mr. Edison was not interested in the proposition, at all, was he?

[fol. 114] A. Mr. Edison was not interested in it, apparently.

Q. The reason for that was because you had not obtained any success with your experiments?

A. No, I know that the reason was not that; but I do know what the reason might have been; one reason might have been that Mr. Edison, unfortunately, was very deaf, and while he could hear moderately well if he could get his ear in the focus of the horn, this device did not have a focus, and I often thought that possibly he did not hear what we did.

Q. Just why did you leave Mr. Edison's employ?

A. I went back to the law business just about that time.

Q. You are a lawyer, are you?

A. I am a patent attorney.

Q. You took this alleged invention of yours, then to Mr. Davis' firm, did you?

A. No. I went to Mr. Edison and I stated I thought that this deserved attention, and I said, "May I try to do it?" And he handed everything to me and said to go to it. Sometime later, after considerable more development work has been done, I went to Mr. John C. Pennie, who was the senior member of what is now Mr. Davis' firm, and he and I became interested in it.

Q. You and Mr. Davis' firm organized this Lektophone Corporation, did you not?

A. I would not say that I was personally engaged in the organization of that particular corporation.

[fol. 115] Q. Then the firm of Mr. Pennie organized it: That is true, is it not?

A. That is true.

Q. And the Lektophone Corporation never did any actual manufacture, either of phonographs or loudspakers, did it?

A. No, I think it confined its efforts to experiments.

Q. How many structures did you build, yourself, under these patents?

A. You mean experimental models?

Q. Experimental and otherwise.

A. I never counted them, but I made several dozen, I should say.

Q. When did you first build a loudspeaker with a conical diaphragm?

A. When did I personally engage in the building of them?

Q. Yes.

A. I think it was the year after the armistice.

Q. You built one, or did you engage in it then commercially?

A. I have never engaged in it commercially, until very recently, but I maintain a laboratory in Washington, where experimental work is done.

Q. In working on this problem, you had no thought of any loudspeaker sound reproduction such as these models represent here, did you?

A. I was not sufficient of a prophet to foresee the condition that has arisen with the advent of radio broadcasting, but——

Q. You were——

[fol. 116] The Court: One minute. Let him finish.

A. But we always kept in mind any use that the invention that we were working on might be applied to.

Mr. Loftus:

Q. But at that time you were directing your attention to phonographs, only: Isn't that correct?

A. To mechanical reproduction of sound.

Q. What is the essential thing to the success of a loudspeaker? It is the operating unit, is it not?

A. I do not think any one thing is the essential thing.

Q. It is more important than the cone, is it not?

A. I would not say so.

Q. Don't you agree with me that with a proper operating unit you can reproduce these self-sustaining sound waves, with any kind of a cone?

A. No, I would not agree with you.

Q. What do you think that cone requires?

A. Why, it requires design and building to attain a flat amplitude curve, and a high degree of efficiency, and a wide range of frequency.

Q. There are many free-edge cones on the market that are considered fairly successful, are there not?

A. I never considered any of them successful.

Q. They do exist, and they are sold in large quantities: That is true, is it not?

A. I have not seen very many free-edged cones.

Q. The largest seller, perhaps, is this Western Electric type, isn't that true?

A. I would not say so. There are quite a number of [fol. 117] them that have been manufactured. I am not acquainted with the figures on these things.

Q. Now, this peripheral rim portion which you now call the flexible rim, that is the same rim that you testified in the Western Electric suit was of springy material, is it not?

A. It should have some springy action.

Q. Why is that?

A. That is due to the condition that requires the attainment of very high efficiency. When this combination of three elements was made, the amount of energy which we had available was very small, compared with what is used ordinarily today, and the degree of efficiency was the best that had been attained with a horn and sound-box combination, which had been worked on for thirty or forty years; it was necessary to have the cone respond to a very small signal, and in a very sensitive way, and that degree of efficiency is best attained by having a slight springy action in the rim. If the power that is available in the signal is sufficient, the requirement for having any of that spring action falls off, and when the power is excessive, the less you have of it the better.

Q. Now, you also refer to that peripheral rim in your patent as a supporting rim. By that you mean that it must be sufficiently stiff and rigid to support the cone in vertical position?

A. Do you mean with the axis in vertical position, or standing with its base in a vertical plane?

[fol. 118] Q. The axis vertically disposed, as you had it in this phonograph.

A. No—it is not necessry that it be placed in that condition, but it should be supported in the center of the aperture in which it is mounted.

Q. Where you speak, here, of this peripheral rim serving to return, to restore the cone to neutral position, you refer to the neutral position axially, do you not?

A. In a way, yes. That is, the driving element need not be required to carry any of the weight of the cone but the movement of the cone can be effected either side of the neutral position, or where it would substantially hang in the support of the rim.

Q. What do you mean here in your patent where you speak of "the tympanum being of sufficient area to impart to the surrounding free air, when vibrated, sound waves substantially corresponding in intensity to the original sound waves"?

A. We meant there the sort of reproduction which was then being attained with phonograph of the sound-box and horn type, which were able to make the speech voice or singing voice equal in intensity to the natural voice.

Q. That expression does not mean much to-day, as applied to loudspeakers, does it?

A. No, for a number of loudspeakers to-day are caused to work at intensities far above anything that would be considered normal.

Q. Almost any size of cone to-day will produce the self-[fol. 119] sustaining sound waves, won't it, if you got enough power in the operating unit?

A. It will produce some of the frequencies, I do not believe that many of them will produce an amplitude balance and response which we would call a real good quality.

Q. You heard us operate this device, Exhibit 13, didn't you, built after the manner of the Dann & Lapp patent?

A. Yes.

Q. Wherein the cone has a four-inch dimeter—you heard that operated?

A. Yes.

Q. Did it reproduce self-sustaining sound waves?

A. Undoubtedly there were quite a lot of them there.

Q. Was that in free air without a horn?

A. I am not sure that it was in free air.

Q. Why not? You saw us remove the horn?

A. Well, I would say that was a glorified sound-box, but I would not say that that diaphragm was a cone operating in free air.

Q. The cone is exposed on both sides, is it not?

A. There is a depression in a metallic diaphragm there—the portion that has the depression in it is exposed.

Q. That is the only part that gives off any sound, isn't it?

A. I would not say so.

Q. Where else was the sound given off?

A. I have not had any opportunity to investigate that particular type of thing, but I would say that the metal plane just adjacent to the cone is doing something.

[fol. 120] Q. I notice the dampers on here are felt, on the flat portion.

A. Yes, I notice those.

Q. What would be the purpose of putting them on there?

A. I have not the slightest idea.

Q. The effect, however, would be to dampen any sound coming through them, would it not?

A. I imagine that it was, because the diaphragm is tin, or metal.

Mr. Loftus: That is all.

Mr. Davis: That is all.

Testimony of Clair L. Farrand, for Plaintiff (in rebuttal)

Clair L. Farrand was called as a witness on behalf of plaintiff, was duly sworn and testified as follows:

Direct examination.

By Mr. Davis:

I am the president of the Farrand Manufacturing Company. That company is a licensee and manufactures radio loudspeakers under the patents here in suit. I am also a director of the Lektophone Corporation and I own some stock in that corporation. I am the Farrand who manufactured the so-called Phonetron. The Phonetron was a

loudspeaker using a conical diaphragm of the type used in the phonograph called the Actuelle, manufactured by the Pathe Phonograph Company. It was actuated by an electric motor or driver of the moving coil type.

[fol. 121] Q. This device, which I show you on page 2 of this book, is this a picture of the Phonetron?

A. Yes.

Q. Is the photograph on page 1 of that book a photograph of the Actuelle Phonograph that you spoke about?

A. Yes, it is.

The circumstances under which I began the manufacture of the Phonetron were as follows:

I was interested in developing a wireless telephone system which requires a loudspeaker. I heard of the development and manufacture of the phonograph called the Actuelle, by the Pathe Phonograph Company, and sought to use that as a loudspeaker. I tried other types of diaphragms, and pleated paper diaphragms. The use of a diaphragm without a horn particularly appealed to me, because loudspeakers had what were called "horny" sounds, and reverberations that were objectionable, and I thought that the cone diaphragm, working directly on the air, without the use of the horn, would probably give more faithful reproduction. As to whether there had been any improvement in the art of telephony and the radio art which made it possible to get a superior form of energy over what was possible in the phonographic art—at that time the vacuum tube amplifier had been developed to the extent that it was possible to get voice currents,-that is, currents corresponding in frequency to voice and music, in practically unlimited quantity, and microphones had been developed so that these currents corresponded very exactly to the orig-
[fol. 122] inal sound. The principal difficulty in reproducing music or voice seemed to lie with the speaker, and it was to this particular thing that I directed my attention.

The loudspeakers that were on the market at that time were sound-box and horn loudspeakers. The Phonetron was manufactured after several years of development in 1921 and was sold in that year.

As to whether my company was the first licensee to manufacture radio loudspeakers under the patent as distinguished from phonographs, my company was not formed

then; I personally was the first one to do so. Subsequently, my company after formation, took over that manufacture.

The next company that manufactured a loudspeaker under license was the Pathe Phonograph and Radio Corporation. That was a company that was the outgrowth and successor to the Pathe-Freres Phonograph Company, that manufactured the Actuelle phonograph. When I got my license to manufacture the Phonetron, I was not then an officer of the Lektophone Corporation.

As to what I found with respect to the possibility of getting a license for a radio loudspeaker—I found that the Pathe Phonograph Company had an exclusive license, and I found that there were indications that I could get a license to manufacture the product if I conducted negotiations with the Lektophone Corporation and were given a license limited to the radio field.

The photographs on the third and fourth pages of the [fol. 123] book shown to me are photographs of the products of the Pathe Phonograph & Radio Corporation. The first one is the first radio loudspeaker type and the second one is a phonograph. The photograph on the fifth page of the book is a photograph of a loudspeaker device we manufacture, that, is the Farrand Manufacturing Company, commencing in 1925.

The next licensee was the American Bosch Magneto Corporation, who took a license in August, 1925, and the photographs on pages 6 and 7 of this book are the product of that company. There are two forms.

The photograph on page 8 is a later form manufactured by the Pathe Phonograph & Radio Corporation. The next licensee was J. S. Timmons, Inc.——

Mr. Loftus: I object to this line of examination. These licenses are apparently in writing, and they should be produced.

The Court: What is the object of it?

Mr. Davis: The object is to show the wide acquiescence and payment of royalties. The licenses are available if counsel cares to look at them.

The Court: Very well, proceed.

The next license was to J. S. Timmons, Inc., who took a license in the fall of 1925. The photograph on page 9 in this book, is a photograph of the Timmons product.

The photograph on page 10 is a photograph of the product of the Radio Foundation, Inc. This company was a li-
[fol. 124] censee who took a license in April, 1923, and who sub-licensed to the Pathe Phonograph & Radio Corporation. The next licensee was the Stromberg-Carlson Telephone Manufacturing Co. They took their license in December, 1925. The photograph on page 11 of this book is a photograph of their product. The next licensee was the Radio Corporation of America, who took their license February 15, 1926. They paid $200,000 as commuted royalties. The photograph on page 12 of this book is a photograph of one of the products of the Radio Corporation of America.

Q. I have here a radio loudspeaker. Can you identify that?

A. That is a radio loudspeaker made by the Radio Corporation of America, known as Model 100-A.

Q. Is that a recent model?

A. Yes, it has been on the market about a year and a half.

Q. Will you tell us whether the cone and the supporting rim in the device are all made in one piece?

A. They are all made of one piece of paper.

Q. Do you know whether that device is marketed widely, or not?

A. Yes; I believe the Radio Corporation sold 500,000 of that type.

Q. Do you know whether it reproduces sound over a wide range without blasting?

[fol. 125] A. It is one of the best speakers in the market in that regard.

Mr. Davis: I offer this Radio Corporation speaker in evidence as Plaintiff's Exhibit 20.

Mr. Loftus: Objected to as immaterial, irrelevant, and incompetent. There is no evidence presented here of a competent nature to show that this has anything to do with the Hopkins patent.

The Court: It will be received over the objections; if not competent nor material, the Court will ignore it in making up its decision. An exception will be noted for counsel.

Plaintiff's Exhibit 20: The Radio Corporation loudspeaker was received in evidence as Plaintiff's Exhibit 20.

Mr. Davis: I will call your Honor's attention to the fact that there can be found on the device the patent marks, which refer to the patent here in suit.

Mr. Loftus: Is there any patent marking on this model?

Mr. Davis: Yes.

The Witness: The bottom of the box has been taken off.

Mr. Loftus: The patent marking is not on that.

Mr. Davis: It is on the part that has been taken off.

The next photograph of this book on page 13, is a photograph of a Titanafram made by the Titanafram Corpora-
[fol. 126] tion which took a license in 1927. That license has since been acquired by the Brandes Company, who make the Kolster-Brandes speaker. On page 14 there is another photograph of a speaker made by the Farrand Manufacturing Company. It is called the Sandar Senior Speaker. On page 15 there is a photograph of a similar speaker of the same name, Sandar Junior. On page 16 is a photograph of the Radio Corporation of America, Model 100-A, such as the one just put in evidence. On page 17 is a photograph of another form of the Timmons speaker. On page 18 is a photograph of another form of the Farrand Manufacturing Company's speaker. That was a new model a year ago. On page 19, there is a photograph of a new model of the Stromberg-Carlson Telephone Manufacturing Company speaker. On page 20 there is a photograph of a speaker made by the Amplion Corporation of America who took a license in 1927. They are an American subsidiary of an English corporation, I believe. On page 21, there is a photograph of the Brandes Products Corporation speaker. This one of the devices that were involved in the suit in the Third Circuit of Lektophone v. Brandes. On page 22 is a photograph of the O'Neil Radio Corporation's speaker. That Company succeeded to the Thompson license which they acquired on November 1, 1927. On page 23, is a photograph of the Utah Radio Products Company loudspeaker. They are a corporation manufacturing in the middle west
[fol. 127] and took their license on November 1, 1927. On page 24 is a photograph of the United Radio Corporation loudspeaker. They are the makers of the Peerless speaker and recently took a license on April 27, 1928.

Except for the Radio Corporation of America, and up to the date of this Peerless license, all the licenses were

granted on a royalty basis. The Peerless license was on a commuted royalty basis, practically the same as the Radio Corporation of America.

The photograph on pages 24, 24a, 24b, and 24c, are photographs of the Peerless product in different positions. This one is with the cover removed.

Q. Now, as I understand it, in the Peerless license there was a distinction made between the Hopkins patent here in suit, and a certain pending patent application of Farrand, that was filed under your name as inventor. Will you tell us about that?

A. The Peerless license provided that they would pay $160,000 for the patents and applications of the Lektophone Corporation, other than those in the name of Clair L. Farrand; upon the payment of an additional $50,000 they had the option of securing a license under those applications.

Q. Can you tell us approximately how many loudspeakers have been manufactured and sold under these licenses that you have testified about?

A. There have been approximately 1,250,000 licensed speakers sold.

[fol. 128] Cross-examination.

By Mr. Loftus:

Q. How did you arrive at this number of loudspeakers that you mentioned in your last answer as having been sold under the Hopkins patent?

A. I have some notes which I have taken from the Lektophone Corporation books on the number of speakers—I have some notes of the number of licensed speakers sold, which I have taken from the books of the Lektophone Corporation, and they total approximately 675,000 speakers, which, when added to the 500,000 speakers that the Radio Corporation reported to have made——

Q. (Interrupting.) Reported to whom?

A. In their financial report they made of loudspeaker sales.

Q. In other words, you read that in the newspapers, did you?

A. I read it in a report of the Radio Corporation.

Q. Personally, you have no knowledge of whether they sold 500,000 or 50,000?

A. That is correct, it is an estimated figure. Do you wish me to continue with my answer?

Q. Yes.

A. 75,000 speakers made by Brandes prior to the time they acquired their license, making a total of 1,250,000 speakers.

Q. Now, have you any figures showing the number of speakers that were made by your licen*ses* and reported to you since the time they obtained their license?

[fol. 129] A. Yes, they total approximately 675,000 speakers.

Q. That is all that you have any record of; the rest is practically guesswork?

A. No, we have a record of the Brandes Company, which is approximately 75,000 speakers.

Q. Made at a time when they were not a licensee?

A. That is correct. That makes a total of 750,000.

Q. Now, most of these licensees were driven to take this license by your bringing suits against them, were they not?

A. I do not believe so.

Q. How many suits have you brought under these Hopkins patents?

A. There are thirteen licensees, and I believe that suits were filed against only two or three, I am not sure about the third.

Q. I am asking you how many suits, in all, have you commenced under these Hopkins patents?

A. I don't know the number; there are quite a few suits against concerns that are not licensees.

Q. Probably 50, in all, aren't there?

A. Probably 20—at least 20, I would say.

Q. Aren't there more than that? I think I have a record here of 30.

A. I think 30 would be about correct.

Q. May I ask you again, how many of your present licensees were formerly defendants?

A. I believe two or three.

Q. Will you name them?

A. The United Radio Corporation, O'Neill Radio Corporation, Kolster-Brandes, and possibly—no, that is all; three.

[fol. 130] Q. Now, in these license agreements, there are several patents and pending applications enumerated in them, are there not?

A. Yes.

Q. And those patents, in addition to the patents in suit, include these different patents taken out by Mr. Davis jointly with Mr. Joss.

A. What patent are you referring to?

Q. Schedule A attached to the Radio Foundation license. To save time, I will ask that this entire list of Schedule A be copied into the record at this point. It includes some ten or twelve patents, in all.

(Schedule A is as follows:)

"SCHEDULE A

"Marcus C. Hopkins

U. S. Pat. #1,281,527, dated July 2, 1918, for 'Sound Regenerating machine.'

U. S. Pat. #1,271,528, dated July 2, 1918, for 'Sound Regenerating Machine.'

U. S. Pat. #1,271,529, dated July 2, 1918, for 'Acoustic Device.'

"Wm. H. Davis and Frederick E. Joss

U. S. Pat. #1,312,957, dated Aug. 12, 1919, for 'Phonograph Transmission Rod.'

U. S. Pat. #1,312,958, dated Aug. 12, 1919, for 'Phonograph Transmission.'

U. S. Pat. #1,312,959, dated Aug. 12, 1919, for 'Talking Machines.'

U. S. Pat. #1,316,536, dated Sept. 16, 1919, for 'Tone Control Device for Talking Machines.'

[fol. 131] U. S. Pat. #1,316,537, dated Sept. 16, 1919, for 'Tone Control Device for Talking Machines.'

U. S. Pat. #1,389,632, dated Sept. 6, 1921, for 'Acoustic Diaphragms.'

"Frederick E. Joss

U. S. Pat. #1,318,083, dated Oct. 7, 1919, for 'Talking Machine.'

U. S. Pat. #1,359,995, dated Oct. 27, 1920, for 'Stylus Holders for Talking Machines.'

Application of Clair L. Farrand for U. S. letters patent, Serial Number 464,009, filed April 23, 1921."

Q. I notice, also, that the license agreement includes on the application of Clair L. Farrand, Serial No. 464,009, April 23, 1921. Tell us about that application. Is that one which is supposed to mature into a patent on the broad idea of an electrical unit and a cone diaphragm?

A. Yes.

Q. Which would be a great deal more important than the Hopkins patent if issued?

A. I could not say.

Q. At the time the Radio Corporation of America took this license that you referred to, they were building a large cone, weren't they, something like thirteen inches in diameter?

A. They were building two cone speakers, one was the Model 100-A—I believe the cone in that speaker was about nine inches in diameter—and another model called the Radiola 104, that had a cone about six and a half inches in diameter.

[fol. 132] Q. Isn't it true that the Radiola 104 6½-inch diameter cone appeared on the market after this license was negotiated from the Lektophone Corporation?

A. My impression is it was on the market before.

Q. And likewise, with this last-named licensee, United Radio Corporation, it is true that they are bringing out a large diameter cone, isn't it, something in excess of twelve inches?

A. I have not heard of it. The only speaker I know of that they are building is a speaker with a cone of about seven inches in diameter.

Q. You had nothing to do with the negotiations leading up to this license granted by Lektophone Corporation to the United Radio Corporation?

A. No.

Q. So you don't know what devices it applies to, do you?

A. Yes, I do; the license gives them the right to use and build loudspeakers under the Hopkins patent.

Q. A cone how large in diameter?

A. Either large or small; there is no restriction in that regard.

Mr. Loftus: That is all.

Plaintiff's Exhibit 21.—The book of photographs identified by the witness Farrand on direct examination was received in evidence as Plaintiff's Exhibit 21.

[fol. 133] Plaintiff's Exhibit 22, for identification.—The book of licenses was marked for identification as Plaintiff's Exhibit 22.

Testimony of H. J. Hasbrouck, for Plaintiff (in Rebuttal)

H. J. Hasbrouck was called as a witness on behalf of plaintiff, was duly sworn and testified as follows:

Direct examination.

By Mr. Davis:

I have been attending here in court during this trial. You asked me this afternoon to go out and buy for you a radio loudspeaker of the Jensen Manufacturing Company, and I did so. The speaker you have in your hand is the one I bought. I bought the speaker just as it is.

Q. Were you offered any baffle-board or cabinet connected with it?

Mr. Loftus: That is objected to as immaterial, irrelevant and incompetent. The device has nothing to do with the defendant in this case.

The Court: It would so appear, but for the sake of the record he may answer; if not material, the Court will ignore it in making up its decision. Counsel may have an exception.

A. The salesman asked me if I would like a cabinet for it, and I told him no, I wanted it as it was displayed in the window.

Q. It was so displayed in the window?

A. Yes.

Q. Where did you buy it?

[fol. 134] A. At the Coast Radio Company, 1106 Market Street.

Plaintiff's Exhibit 23.—The loudspeaker made by the Jensen Manufacturing Company identified by the witness is received in evidence as Plaintiff's Exhibit 23.

Mr. Davis: That is all.
Mr. Loftus: No cross-examination.

Testimony of Louis A. Hazeltine, for Plaintiff (Recalled in Rebuttal)

Louis A. Hazeltine was recalled as a witness on behalf of paintiff, and having been previousy duly sworn, testified as follows:

Q. Mr. Hazeltine, you heard yesterday the oral demonstration of defendant's Exhibit 17, in which loud, rattling noises were produced, did you?
A. I did.
Q. What caused those noises?
A. I heard them. I do not think that they were due to the blasting caused by the wave action which I described yesterday. I checked up that conclusion first by examining the structure, and then by testing it again, and I found out that the loud and very disagreeable noise was due to the striking of the pole pieces in the driving motor. The driving motor was not suited to that cone, and to the amount of power that might be readily applied to it.
Q. Will you please point out to the Court where the pole [fol. 135] pieces are, and where the striking occurred on Exhibit 17?
A. The pole pieces may be seen midway between the poles of the large permanent magnet. The pole pieces that I refer to are made of laminated iron, that is, iron sheets clamped together and they show as black members clamped together by light-colored metal. In between these pole pieces is the armature, which is pivoted in the center at the sides. That armature moves back and forth between these pole pieces and the clearance, as can be seen, is very small, a few thousandths of an inch. And when current is passed through the coil of this motor element in order to vibrate it and produce sound, that armature oscillates back and forth about its pivot, and when the power is as great as was used in the court yesterday, the armature travels over the whole space available for its motion, and strikes, here, against the pole faces, causing a series of sharp raps, which cause that very disagreeable noise that we heard.

Q. Is that noise due to any fault or deficiency of the cone structure, or not?

A. No, that is quite independent of the cone structure. It means that the motor element is not properly adapted to that particular cone. That is a problem that is present always whenever we have a motor element of this moving armature type. It is a thing that always has to be considered and taken care of by the designer of a loudspeaker system.

Q. Was that rattling effect apparent in one of the other [fol. 136] exhibits that was illustrated here yesterday, due to the same lack of balance in design?

A. Yes, that was present in the Lumiere loudspeaker, as was stated by Mr. Tenny in his testimony, and the reason for its occurrence here is precisely the same as he said to be the cause with the Lumiere, an improper adaption of the motor driving element to the loudspeaker system.

Q. Then the rattling that we heard was not due to the fact that the rim of Exhibit 17 was made of paper, and the absence of that noise was not due in Defendant's Exhibit 15 to the fact that the rim was made of leather, instead of paper?

A. I believe that there is no difference in that respect. I have made further tests to determine that last night, and found out that the Radiola 100-A, which I believe is Exhibit 20, which has a paper rim, behaved substantially the same way as one of the Rola speakers which had a leather rim. I tested them first as they were, that is, each one having felt in the back of the cone, and without the presence of any baffle, the two being of similar dimensions, and, therefore, affording a direct comparison. I found out that with the ordinary power it was not possible to cause a striking of the pole pieces in either case; nor was there any conspicuous blasting due to any paper effect. I then removed the felt from the back of each of these loudspeakers, and found that in both cases the removing of that damping [fol. 137] means caused an increased amplitude, and I found that was sufficient in both cases to cause striking of the pole pieces.

Q. As I understand it, that comparison was made between this device Exhibit 20 and a Rola loudspeaker which is like Exhibit 15?

The Court: Was the other side represented at these tests?
Mr. Davis: No.

A. Yes, like Exhibit 15, first with the felt in place, and then with the felt removed.

Q. It was testified that a great part of the energy is absorbed in the leather ring of defendant's loudspeaker. Do you agree with that?

A. No. I believe that it can be shown that that is not the case, because there is present a pronounced resonance effect, that is, the loudness of the sound, when the striking of the pole pieces does not occur, is much more pronounced at a certain frequency than at other frequencies. If there was any absorption of energy in the rim, then that would not take place, the resonance would not be so pronounced. The conclusion is that the amount of energy absorbed in the rim is but a small part of the total energy under ordinary conditions.

Q. Will you compare that with the amount of energy absorbed in the paper rim of Exhibit 20?

A. In both cases, the amount of energy absorbed in the rim is relatively small.

Q. Will you say whether or not the substitution of leather for paper changes in your opinion, the principle or mode [fol. 138] of operation of Defendant's devices, consisting of the paper cone, rigid frame, and interposed flexible rim?

A. No, it does not.

Q. Now, you have testified that the loud rattling noises we heard yesterday were not due to the weaving and consequent blasting of the rim about which you testified yesterday. Will you please illustrate for us that weaving and blasting about which you testified yesterday?

A. A Rola speaker has been prepared in which the leather rim has been removed. I believe this is not an exhibit. I tested that and found that it shows the weaving effect very well.

Mr. Davis: If your Honor please, I want to have a physical demonstration of this for a moment.

The Court: Very well, proceed with it.

Mr. Loftus: This is not the defendant's structure at all, your Honor.

The Court: I will allow it to be introduced over the objection; if not competent or material the Court will ignore it in its decision, and counsel may have an exception.

Mr. Davis: While they are preparing that, perhaps I can go ahead with the examination.

The Court: All right.

Q. Mr. Hazeltine, leaving that matter of the demonstration until the assistants prepare the devices, will you please tell us whether or not, in your opinion, the addition of a baffle to defendant's cone loudspeaker changes the principle or mode of operation of the combination?

[fol. 139] A. No, it does not. The addition of a baffle is a useful supplementary means, but does not change the principle of operation.

Q. Directing your attention for a moment to the patent to Dann and Lapp, No. 338,660, and the specifications of that patent, which makes the following statement, beginning line 24 of page 1: "In the accompanying drawings, Figure 1 is a perspective view of our invention applied to the door of a transmitter-box"—What is the transmitter-box?

A. I understand that this, which is shown in Figures 1 and 2 particularly of the patent, represent the door that used to be used in ordinary house telephones, that usage being current up to about twenty years ago. The hinges are quite plain, and indicate something as to the size of such boxes, as I should think, perhaps six inches by ten inches in dimensions. The mouthpiece, as shown in this particular one, is turned out of the same piece of wood as the hinged door is made from, as indicated by the sectioning in the drawing, and that mouthpiece, of course, is of the dimensions, approximately, of a person's mouth.

Q. Now, could that device, that is, the electrical and mechanical elements attached to the transmitter of that patent, operate in a reverse way, that is, as a receiver?

A. No, not at all. This transmitter is the same in principle, fundamentally, as the ordinary, present-day telephone transmitter; that is not a reversible device; it acts to pro-

[fol. 140] duce changes in electric current when sound waves are impressed, but it cannot produce sound waves due to any change in the electric current.

Q. Will you proceed with this demonstration.

A. I have been operating the Rola speaker with the leather rim removed, and it could be noticed that with certain of the louder notes, particularly those of lower pitch, that there was a disagreeable noise; that is the noise known as blasting, and was due to a fluttering effect, known also as weaving, at the rim of the cone. The rim of the cone, as I explained yesterday, and as is very obvious, is very easily moved, whereas the cone, as a whole, is moved bodily with much greater difficulty; comparatively small motion of the cone at the apex will set up this fluttering effect at certain frequencies, and that fluttering is very pronounced, so that if it is maintained it can readily be seen by the eye, as well as be detected by the blasting effect one hears. I will now operate this——

The Court: Is the rim free there?

A. The rim is free.

Mr. Davis: How is that fluttering prevented in the defendant's device as it is marketed?

A. That is prevented by the interposition of the leather rim between the edge of the cone and the metal frame. Perhaps I had better show that before going to the single frequency. I have here one of the Rola speakers, which is Exhibit 15, and that did not show that blasting effect. Now, to verify that, I will go over to the one having the leather [fol. 141] rim removed. Now, I will come right back to the other one. The smoothness of the sound in the latter case, and the presence of the blasting in the former case seems very evident.

Q. Will you try that on a single frequency?

Mr. Loftus: Your Honor, I do not see where this is material, at all. They are testing out something that is a mutilated form of the defendant's device with the felt removed.

The Court: You may proceed. In all of these patent cases I have noted that wherever one side brings in a lot of curiosities, the other side has an equal amount, too.

A. I have determined that the removing of the felt in the back has not a pronounced effect on the blasting. Having tested this particular speaker with the rim in place, and with it removed, and with the felt removed in both cases, so that the comparison was on the same basis. I think your Honor can see around the edge a haziness showing the pro-

nounced vibration of that rim at the same time that we hear this very disagreeable sound; at certain places around that rim there was a considerable motion, in some places apparently exceeding one-eighth of an inch; then at certain other places there was comparative rest. These other places are known as the nodes. The number of nodes which occur depends on the frequency. It is also noticed in this demonstration that this blasting effect occurred at a certain frequency, not all frequencies, so that when music is [fol. 142] being played, it is a matter of some seconds, or even some minutes, before any blasting comes, and then it comes on very suddenly and disagreeably.

Q. That effect is prevented in defendant's device Exhibit 15 by the leather ring, is it not?

A. By the leather ring.

Q. You needn't demonstrate that.

A. In that case the result is a steady, pleasing musical note in place of the rasping due to the weaving or blasting effect.

Mr. Davis: I offer in evidence the Rola speaker with the leather detached from the edge of the cone, about which the witness has testified, as Plaintiff's Exhibit 24.

Plaintiff's Exhibit 24.—The Rola speaker so offered was received in evidence as Plaintiff's Exhibit 24.

Cross-examination.

By Mr. Loftus:

Q. Professor, the electrical unit which is attached to this Exhibit 17 is exactly the same as is employed in the standard Rola construction, as shown, for example, in Exhibit 15, is it not, that is, with the same spacing of the pole pieces?

A. I have not examined that carefully.

Mr. Davis: If counsel says that is so, counsel for the plaintiff is willing to admit it. I do not think Mr. Hazeltine has had any opportunity to examine these speakers in detail.

Mr. Loftus: That is the fact, the electrical unit on both of these models is identically alike.

[fol. 143] The Court: That is subject to your examination, of course, at any time, if the witness desires.

(Mr. Loftus:)

Q. Now, in the test that you heard yesterday of Defendant's Exhibit 17, you noticed a blasting at two different frequencies, did you?

A. I did not see exactly what was going on. I heard what was going on. My recollection agrees with your statement, however.

Q. And that blasting at two different frequencies could not be attributed entirely to the spacing of the pole pieces, could it?

A. I believe, as my own test indicated, that there were, as you say, two frequencies at which a loud noise occurred. At one of those frequencies, where the noise was the loudest, that was due to the striking of the pole pieces. At the other frequency, where it was less loud, and required a very large amount of power to produce, that effect, in my own test, and I presume in yours, was due to the fluttering effect of the paper.

Q. Now, you stated that the Dann and Lapp transmitter would not function as a receiver. You do recognize, however, the reversibility of transmitters and receivers, generally, in the telephone art, do you not?

A. No, not generally. Certain devices are reversible, and certain devices are not reversible.

Q. But in general, the principle of a receiver is simply that of a transmitter in reverse, is it not?

A. Not in general at all.

[fol. 144] Q. Would you say that Mr. Tenny's statement that the relationship is about that of a generator to a motor is probably correct?

A. It is correct for some types; quite incorrect for other types.

Q. Now, in regard to the baffles, I will read you a statement in the Radio Broadcast of May, 1928, and ask you if you agree with that—this refers to the Jensen loudspeaker, which was brought in here yesterday in incomplete form. Plaintiff's Exhibit 23. This statement says: "The Jensen

is made in California, and is now generally available, we understand. We have seen curves above reproach, which show the Jensen to have a quite flat response curve from about 60 to 6,000 cycles. With a large baffle-board such as obtained by inserting the loudspeaker in the walls of a home, the lower limit of response can be pushed down to about 35 cycles. A 6-foot baffle-board about 1½ inch thick is, however, very satisfactory." Do you agree with that statement in reference to the use of baffles in connection with loudspeakers of this type?

A. I am not able, of my own knowledge, to check those figures. They do not seem unreasonable to me.

Q. Now, you spoke about the size of this Dann and Lapp structure. Have you ever had occasion to examine any of the early telephone apparatus which can be seen in the various museums, such as the Smithsonian, or Harvard University?

[fol. 145] A. I have seen such exhibits; I have not handled the pieces of apparatus in such exhibits.

Q. Did you note that the mouthpieces in these earlier transmitters were large enough to insert your head in?

A. I did not.

Q. You never have observed that?

A. I saw a great many, but I do not remember any large ones like that.

Q. You do recognize the fact that the early mouthpieces were much larger than the modern transmitter mouthpiece, do you not?

A. *That not* been my recollection. I have seen the exhibit in the Western Electric Museum, which I presume is one of the best, from the labels on the piece of apparatus, and my recollection is that there was not any conspicuous difference in size between the earlier mouthpiece and later ones.

Q. You could see good reason, however, why the mouthpiece in the earlier days should be much larger than they would be at the present time?

A. I think people's mouths are the same size in these days, and I do not see any reason.

Q. The question of sensitivity of the apparatus.

A. It is always, of course, considered good practice to speak up close to a mouthpiece, and if the mouthpiece is too large it would seem to me that that would be detrimental.

Q. What is your opinion as to the factor which has brought about the extensive use of these cone type loud-
[fol. 146] speakers. It is the cone, itself, it is the vacuum tube, is it not, that has made this possible?

A. The vacuum tube has made radio broadcasting possible, that is, it is one of the elements which has made it possible. I would not, however, agree with you, because I have no reason to believe that with a continuation of the phonograph industry the cones might not have gone into considerable use.

Q. Without the vacuum tube used to amplify the electrical energy, you could not have operated any of these cones, could you?

A. I do not think you could very readily have operated them as loudly as you did, but they could have been operated.

Q. That apparatus there includes a vacuum tube, does it not?

A. I suppose so.

Q. And the function of those vacuum tubes is to amplify that electrical energy?

A. Yes.

Q. So that with a weak impulse that you get at the pick-up device, using that amplifying apparatus, you can actually, in any kind of cone, give off self-sustaining sound waves, can you not?

A. You can give off self-sustaining sound waves from a cone of sufficient size, or from any cone at sufficiently high frequency.

Q. You can give off self-sustaining sound waves from that little sound-box that Mr. Davis had in his hand here the other day, could you not?

A. At sufficiently high frequency, but not at most of the useful frequencies.

Q. Don't you think we could hook this up to that appa-
[fol. 147] ratus over there and it would be heard throughout the courtroom?

A. It would be heard very weakly, except at high frequency, unless a very large amount of power was applied to it.

Q. You could apply that large amount of power with this amplifying apparatus, could you not?

A. Of course, I have not tried what you have suggested, but my belief is that you would not get any large sound except at high frequency.

Q. What is your idea of a self-sustaining sound wave?

A. My idea of a self-sustaining sound wave, as the expression is used in the Hopkins patent, is a wave which is of a considerable amplitude, and which uses the greater part of the vibration of the air in the immediate neighborhood of the diaphragm.

Q. He also states that a self-sustaining sound wave was one of approximately the same intensity as the original sound wave impressed upon the record, did he not?

A. I don't remember that.

Q. Assuming that that does appear in the patent, with proper amplifying apparatus, such as we have here, and increasing it, if necessary, we could take any sized cone and produce a sound wave approximating the intensity of the sound waves which were originally impressed upon that record, could we not?

A. I think that your statement of facts is correct, but I do not see any connection between that and the self-sus- [fol. 148] taining sound wave that you refer to in your question.

Q. But the amplifying apparatus, including these vacuum tubes, would enable you to reproduce self-sustaining sound waves approximating the intensity of the original sound waves impressed upon the record, even though you used a very small cone, would it not?

A. No, not necessarily; before you reached the intensity of the output you might have a striking of the pole pieces, as I explained this morning.

Q. You heard this test of the Dann and Lapp structure yesterday, with a four-inch cone, and that certainly gave off self-sustaining sound waves, did it not?

A. I think it did.

Q. You could make the same demonstration with a three-inch cone, could you not?

A. There is going to be some limit. I do not think that that one would give a wave which could be properly described as self-sustaining at very low frequency; the smaller the diaphragm, the smaller will be the range of frequency at which a self-sustaining sound wave can be produced.

Q. That is quite true, Professor, and you can improve that situation by putting a baffle around the cone, can't you?

A. You could improve it, but you could not correct it; the baffle does not take the place of a large cone. It corrects a different kind of difficulty.

Q. You do agree with me that the baffle applied to a [fol. 149] small cone brings out these low frequency notes to much greater advantage, do you not?

A. Yes, it does, but there are two different reasons for a weakening of these low-frequency notes; a large diaphragm corrects one, and a baffle corrects the other. Neither one corrects both.

Mr. Loftus: That is all.

Redirect examination.

By Mr. Davis:

Q. Counsel, on cross-examination, quoted an article referring to this Jensen cone type loud speaker Exhibit 23, as giving frequency of 60 cycles without a baffle. Will you tell us how that compares with the frequencies that were obtainable with the ordinary sound-box and horn of the early days?

A. Possibly I did not follow very well the reading of that article. I do not think that I got that particular statement. I do not believe that that device, without a baffle, would give a good response at as low a frequency as 60 cycles.

Q. What frequency did they commonly get with the old horn and sound-box combination?

A. With an ordinary horn of the size of two feet, there was a very marked dropping off in response at frequencies below 300 or 400 cycles per second, and at any frequency as low as 60 cycles per second the response would be practically nil.

Mr. Davis: That is all. May it be agreed that the actuating unit on this Exhibit 17 is a standard actuating unit of the Rola Company?

[fol. 150] Mr. Loftus: Yes, I thought I brought that out.

Testimony of Clair L. Farrand, for Plaintiff (Recalled in Rebuttal)

Clair L. Farrand was recalled as a witness on behalf of plaintiff and having been previously duly sworn testified as follows:

I have been familiar in actual commerce with the device manufactured and sold in accordance with the British patent to Brown, No. 29,833 of 1910. The device manufactured as shown in this patent, was a telephone receiver of the tuned frequency type; it was designed to resonate to one frequency, for telegraphic purposes. It was not adapted for receiving speech. It was designed to resonate to 1,000 cycles and was used as a part of a head set, a pair of these units being in the headset. The device was designed to be used pressed against the ear. Devices were subsequently manufactured under the British patent to Brown in the nature of loudspeakers. Brown manufactured in 1923 a loudspeaker using that type of diaphragm and actuating unit and later in the same year the R. E. Thompson Manufacturing Company, in the United States, manufactured a loudspeaker practically identical with the Brown loudspeaker, except as to the shape of horn. When the device was applied to a loudspeaker, the diaphragm was actuated at a greater amplitude than the armature over [fol. 151] the pole pieces. When it was used as an ear piece of a head set, the diaphragm moved a lesser distance than the armature over the pole pieces, that is, in a reduction ratio, whereas the loudspeaker actually had a step-up ratio. I have made a sketch of the old Brown device about which I have just testified. (Witness produces sketch.) This sketch is a correct illustration of it and shows the leverage of the lever A correctly. B indicates the pole pieces.

Plaintiff's Exhibit 25.—The sketch produced by the witness is received in evidence as Plaintiff's Exhibit 25.

As to whether these telephone receiving instruments of the headpiece type that are shown in the British patent to Brown operate on unconfined air in any sense—they operate confined air.

Mr. Davis: That is all.

Mr. Loftus: No questions.

Mr. Davis: I want to put in evidence some of these drawings which illustrate the devices involved in the early litigation. This one is the device involved in——

Mr. Loftus: I have not had an opportunity to see these drawings, or to see the device involved in the litigation, and I do not see how they can be offered in an informal manner like that, no proof of what was involved.

Mr. Davis: I can prove it by a witness.

The Court: It is like any other evidence, subject to proof.

[fol. 152] Testimony of Clair L. Farrand, for Plaintiff
(Recalled in Rebuttal)

Clair L. Farrand was called as a witness on behalf of plaintiff and having been previously duly sworn testified as follows:

Q. Mr. Farrand, were you familiar with the litigation between the Lektophone Corporation and the Western Electric Company and the Sylo Company, respectively?

A. Yes, I was.

Q. And you were acquainted with the type of loud-speaker that was employed by the Western Electric Company, and by the Sylo Company respectively?

A. Yes.

Q. I show you a drawing marked "Sylo and Western Electric Speaker," and would you tell me whether that is a correct representation of the loud speaker involved in the Western Electric and Sylo litigation?

A. Yes, it is a correct representation of the two types of speakers mentioned.

Q. And they were known as a double cone speaker?

A. Yes.

Q. Attached to that drawing is a copy of U. S. Patent No. 1,659,923; will you say whether or not that patent illustrates in figures 1 and 2 of the drawings the Western Electric and the Sylo type of loudspeaker?

A. Yes, it does, as to the diaphragm and actuating unit. [fol. 153] Plaintiff's Exhibit 26.—The drawing marked "Sylo and Western Electric Speaker" and U. S. Patent 1,659,923 are received in evidence as Plaintiff's Exhibit 26.

Q. You are familiar with the litigation against the Brandes Company in the Third Circuit?

A. Yes.

Q. There were two types of loudspeakers involved in that litigation?

A. Yes, one with an oval diaphragm, and one with a round diaphragm.

Q. I show you two drawings, and ask you whether or not they correctly represent those two types of loudspeakers.

A. Yes, they do. The smaller diaphragm shown in one view, actually was oval in shape.

Q. In those devices, what was the supporting rim between the rigid frame and the cone made of?

A. It was made of light rubber.

Plaintiff's Exhibit 27.—The drawings of the Brandes speakers identified by the witness are received in evidence as Plaintiff's Exhibit 27.

Q. Are you familiar with the device manufactured by the Crosley Company, and litigated in the Sixth Circuit?

A. Yes, I am.

Q. I show you a drawing with two views; will you say whether or not that is a correct illustration of the Crosley speaker?

A. Yes, it represents the Crosley speaker correctly.

Plaintiff's Exhibit 28.—The drawing of the Crosley [fol. 154] speaker identified by the witness is received in evidence as Plaintiff's Exhibit 28.

Q. Are you familiar with the loudspeaker that was enjoined by the district Court of the District of Delaware in a suit against the Algonquin Company?

A. I am.

Q. I show you a group of five photographs; can you say whether or not they are photographs of the Algonquin speaker in that case?

A. Yes, they are photographs of the Algonquin speaker, and its parts.

Plaintiff's Exhibit 29.—The group of photographs of the Algonquin speaker identified by the witness are received in evidence as Plaintiff's Exhibit 29.

Q. You are familiar with the loudspeaker manufactured by the Splitdorf Company, and enjoined in the District of New Jersey?

A. I am.

Q. I show you two photographs and a line drawing attached together; will you say whether or not they correctly represent the Splitdorf speaker involved in that case?

A. Yes, they do.

Plaintiff's Exhibit 30.—The group of photographs and the line drawing of the Splitdorf speaker identified by the witness are received in evidence as Plaintiff's Exhibit 30.

Q. Are you familiar with a loudspeaker manufactured by the Wirt Company, which was enjoined in the District Court for the Eastern District of Pennsylvania?

A. I am.

Q. I show you a group of five photographs and one line [fol. 155] drawing; will you say whether or not they correctly represent that speaker?

A. Yes, they do.

Plaintiff's Exhibit 31.—The group photographs and the drawing representing the Wirt speaker identified by the witness are received in evidence as Plaintiff's Exhibit 31.

Q. I have here a cone speaker with a frame; can you identify it?

A. That is a cone diaphragm from the Brandes speaker?

Q. The one involved in that litigation?

A. Yes.

Plaintiff's Exhibit 32.—The cone diaphragm from the Brandes speaker identified by the witness is received in evidence as Plaintiff's Exhibit 32.

Mr. Davis: That is all.

Cross-examination.

By Mr. Loftus:

Q. I notice none of these photographs of loudspeakers involved in the litigation carry any dimensions. I would like to have you enlighten us on that, Mr. Farrand. What was the diameter of the diaphragm in this Wirt speaker, Exhibit 31?

A. I do not recall the diameter of the speaker. It was, to the best of my recollection, about eight inches in diameter.

Q. Now, as a matter of fact, it was greater than nine inches, you know that, don't you, Mr. Farrand?

A. I said to the best of my recollection.

[fol. 156] Q. You don't know. Let me ask you as to Plaintiff's Exhibit No. 30, the Splitdorf speaker. What was the diameter of that diaphragm?

A. That diaphragm was an oval shape, and larger than the Wirt diaphragm. I would say its major axis was probably sixteen inches, and its minor axis eleven or twelve.

Q. Similarly, with respect to Exhibit 29, the Algonquin speaker, what was the diameter of that diaphragm?

A. The diameter of that diaphragm was about twelve inches.

Q. And likewise with respect to the Brandes speaker shown in Plaintiff's Exhibit 27—both of those had a mean diameter exceeding nine inches, did they not?

A. In the Brandes the diaphragms, as I recall, and as it is also marked on the diaphragms, it was less than nine inches—8⅞ inches, the diameter of the tympanum over all, and the conical portion was 7 15/16.

Q. I gathered from a reading of the opinion of Judge Buffington in that case that the mean diameter of this Brandes speaker exceeded nine inches. Do you agree with that?

A. May I refer to the second drawing there?

Q. Yes.

A. The smaller the device, the oval cone, I believe had one dimension that was greater than nine inches; I think the minor axis, however, was less; the circular diaphragm

we have one here in court, and it can be readily measured, [fol. 157] but I believe the tympanum was 8⅞ inches in diameter, and the conical portion was less.

Q. What is your definition of a tympanum?

A. I am using the word "tympanum" as used in the Hopkins patent, meaning the area enclosed within the rings.

Mr. Loftus: That is all.

Mr. Davis: Now, if your Honor please, I have one of these Stroh devices, and by stipulation of counsel it may be put in as an exhibit.

Mr. Loftus: I would be glad to have it in.

Mr. Davis: Then we offer this in evidence as Plaintiff's Exhibit 33. And it is stipulated that it is one of the devices of the Stroh British patent.

Plaintiff's Exhibit 33.—The Stroh device so offered was received in evidence as Plaintiff's Exhibit 33.

Mr. Loftus: I want to offer, in connection with the depositions which I read yesterday, a photograph of the Lumiere phonograph, accompanying the deposition of Mr. MacEwan, and ask that it be marked Defendant's Exhibit 34.

Defendant's Exhibit 34.—The photograph of the Lumiere phonograph, so offered, was received in evidence as Defendant's Exhibit 34.

Mr. Loftus: I also wish to offer a drawing of the Stroh violin, accompanying the deposition of Mr. Sooy, as Defendant's Exhibit 35. That is by stipulation.

[fol. 158] Defendant's Exhibit 35.—The drawing so offered is received in evidence as Defendant's Exhibit 35.

It is hereby stipulated and agreed that the foregoing is a correct copy of the condensed trial record with testimony stated in narrative form as agreed upon by the parties.

Wm. H. Davis, Chas. M. Fryer, Counsel for Plaintiff. Chas. E. Townsend, Wm. A. Loftus, Counsel for Defendant.

Approved: Frank H. Kerrigan, U. S. District Judge.

[Endorsed:] Filed December 26, 1928.

In United States District Court

Petition of Plaintiff, Lektophone Corporation, for an Order Allowing Appeal—Filed Sept. 12, 1928

The plaintiff in the above-entitled cause, Lektophone Corporation, feeling itself aggrieved by the final decree made and entered in said cause on July 30, 1928, dismissing the bill of complaint and awarding costs to defendant, comes now by its solicitors and counsel, and prays this Court for an order allowing said plaintiff to prosecute an appeal from the said final decree to the Honorable United States Circuit Court of Appeals for the Ninth Circuit [fol. 159] under and according to the laws of the United States in that behalf made and provided, and also that an order be made fixing the amount of security which said plaintiff shall give and furnish upon such appeal.

William H. Davis, Chas. M. Fryer, Solicitors and Counsel for Plaintiff.

[File endorsement omitted.]

In United States District Court

Assignment of Errors of Plaintiff, Lektophone Corporation—Filed Sept. 12, 1928

Now comes Lektophone Corporation, plaintiff in the above-entitled cause, and specifies and assigns the following as the errors upon which it will rely upon its appeal to the United States Circuit Court of Appeals for the Ninth Circuit from the final decree made and entered in said cause by this Honorable Court on the 30th day of July, 1928, dismissing the bill of complaint and awarding costs to defendant.

1. The above entitled court, to wit, the Southern Division of the United States District Court for the Northern District of California, Third Division, erred in not granting to the plaintiff the relief prayed for in its bill of complaint.

2. Said court erred in holding that the defendant has not infringed Claims 1 to 8, inclusive, of United States letters [fol. 160] patent to Marcus C. Hopkins, No. 1,271,529.

3. Said court erred in not holding that defendant has infringed Claims 1 to 8, inclusive, of United States letters patent to Marcus C. Hopkins, No. 1,271,529.

4. Said court erred in holding that Claims 29 and 30 of United States letters patent to Marcus C. Hopkins, No. 1,271,527, are invalid.

5. Said court erred in not holding that Claims 29 and 30 of United States letters patent to Marcus C. Hopkins, No. 1,271,527, are valid and that defendant has infringed each of said claims.

In order that the foregoing assignment of errors may be and appear of record, the said plaintiff presents the same to the Court and prays that such disposition may be made thereof as is in accordance with the laws of the United States.

Wherefore, said plaintiff prays that said decree be reversed and that said United States District Court in and for the Southern Division of the Northern District of California, Third Division, be directed to enter a decree in favor of said plaintiff and against the defendant, in the usual form, adjudging and decreeing said United States letters patent No. 1,271,529 and No. 1,271,527 valid and infringed by said defendant as alleged in the bill of complaint herein, granting to plaintiff all further relief prayed for in its said bill of complaint and referring the cause to a Master in Chancery for an accounting of damages and profits. [fol. 161] All of which is respectively submitted.

Wm. H. Davis, Chas. M. Fryer, Solicitors and Counsel for Plaintiff.

[File endorsement omitted.]

IN UNITED STATES DISTRICT COURT

ORDER ALLOWING APPEAL OF PLAINTIFF, LEKTOPHONE CORPORATION—Filed Sept. 12, 1928

In the above-entitled cause, the plaintiff Lektophone Corporation, having filed its petition for an order allowing an appeal, together with an assignment of errors—

Now, therefore, upon motion of William H. Davis and Charles M. Fryer, solicitors for said plaintiff, it is ordered that the said appeal be, and the same is, hereby allowed to said plaintiff, to the United States Circuit Court of Appeals for the Ninth Circuit from the final decree made and entered in said cause on July 30, 1928, dismissing the bill of complaint and awarding costs to defendant, and that the amount of the cost bond of plaintiff on said appeal be, and the same is, hereby fixed in the sum of Three Hundred Dollars ($300.00).

It is further ordered, that upon the giving of such cost bond a certified transcript of the record and proceedings herein be forthwith transmitted to said United States Circuit Court of Appeals.

[fol. 162] Dated September 12th, 1928.

Frank H. Kerrigan, District Judge.

[File endorsement omitted.]

Bond on appeal for $300.00, approved and filed September 12, 1928, omitted in printing.

[fol. 163] IN UNITED STATES DISTRICT COURT

JOINT PRÆCIPE AND STIPULATION FOR RECORD ON APPEAL—Filed Dec. 26, 1928

To the Clerk of the Court:

Please prepare a transcript of the record in the above-[fol. 164] entitled cause for the Circuit Court of Appeals, Ninth Circuit. The transcript should conform to the following terms of the joint præcipe and stipulation.

It is hereby stipulated by and between the parties hereto, through their respective counsel, that the printed record on appeal to the United States Circuit Court of Appeals for the Ninth Circuit in the above-entitled action shall consist of the following papers and documents:

1. Docket entires.
2. Bill of complaint.
3. Answer.

4. Amendment to answer dated November 16, 1926.
5. Amendment to answer dated November 30, 1927.
6. Evidence in narrative form.
7. Plaintiff's Exhibits 1, 2, 4, 5, 6, 7 and 25.
8. Defendant's Exhibits 9, 12, 19 and 34.
9. Opinion of Hon. George M. Bourquin.
10. Final decree.
11. Assignment of errors.
12. Petition for order allowing appeal.
13. Bond on appeal.
14. Order allowing appeal.
15. Citation on appeal.
16. This stipulation.
17. Stipulations and orders extending time for filing record in Circuit Court of Appeals.
18. Clerk's certificate.

[fol. 165] It is further stipulated and agreed that all exhibits which are not printed in accordance with this stipulation are physical exhibits and shall be produced in the Court of Appeals.

Wm. H. Davis, Chas. M. Fryer, Solicitors for Plaintiff. Chas. E. Townsend, Wm. A. Loftus, Counsel for Defendant.

The foregoing præcipe and stipulation is hereby approved and the Clerk of the court is directed to certify the record in accordance therewith.

Frank H. Kerrigan, United States District Judge.

Dated Dec. 26th, 1928.

[File endorsement omitted.]

Clerk's certificate to foregoing transcript omitted in printing.

[fols. 166-170] Citation in usual form, showing service on Chas. E. Townsend and Wm. A. Loftus, filed September 12, 1928, omitted in printing.

[fol. 171] Minute entry of argument and submission June 21, 1929, omitted in printing.

[fol. 172] In United States Circuit Court of Appeals

Order Directing Filing of Opinion and Filing and Recording of Decree—Sept. 23, 1929

By direction of the Honorable Frank H. Rudkin, Frank S. Dietrich and Curtis D. Wilbur, Circuit Judges, before whom the cause was heard, ordered that the typewritten opinion this day rendered by this Court in above cause be forthwith filed by the Clerk and that a decree be filed and recorded in the minutes of this court in accordance with the opinion filed.

In U. S. Circuit Court of Appeals

Upon Appeal from the United States District Court for the Northern District of California, Southern Division

Before Rudkin, Dietrich, and Wilbur, Circuit Judges

Opinion—Filed Sept. 23, 1929

Wilbur, Circuit Judge:

The appellant, being the owner and assignee of patents No. 1,271,529 and 1,271,527, issued to Marcus C. Hopkins, [fol. 173] July 2, 1918, upon applications filed July 14, 1913, claims that these patents and particularly claims 1 to 8 inclusive of the former and 29 and 30 of the latter are infringed by a radio loud speaker manufactured by the appellee, and seeks the usual remedies which were denied in the lower court.

The Hopkins patents were of sound-reproducing instruments for phonographs. The vibrating and sound reproducing element styled by the patentee, a tympanum, was in form a plane annulus from which projected a right cone with axis perpendicular to the plane of the annulus.

As stated in the patent, "the whole diameter of the tympanum * * * should exceed nine inches in order

that the conditions required to regenerate the sound waves in the manner above described shall be fulfilled. The case of the central conical portion 1 should exceed in area one-half of the effective area of the entire tympanum * * *. in other words the diameter of the base of said conical portion should be at least eight-tenths of the diameter of said aperture. The altitude of the conical portion 1 should be at least one-quarter of the diameter of its base."

The vibrations of the needle or stylus of the phonograph were imparted to the apex of the cone, by a system of levers which reduced the amplitude of the vibrations about one-half, but did not affect the number thereof. "It is of vital importance," the patent states, "that the tympanum be made of crisp, strong material, having considerable rigidity within itself, and it is also of vital importance that [fol. 174] the tympanum as a whole be extremely light and have as little inertia as possible without a weakening effect." The patent points out that the purposes of the conical form, is to give sufficient rigidity in the direction of the base so that it would move bodily without wave motions beng set up in the cone itself. "While I prefer," says the patent, "to construct the tympanum in the form described and shown with a smooth surface, especially in view of the ease of construction, yet it is possible to form radial or concentric corrugations in the plane peripheral portion and produce a light, stiff and very satisfactory article for the purpose. It is conceivable, too, that when the tympanum is provided with corrugations as just suggested some variation from the proportions above given may be made, but such variations will not be great."

The method of connecting the phonographic needle to the apex of the cone by levers which reduce the amplitude of the vibration and to the same extent increase the power is also involved in this litigation being covered by claims 29 and 30, above mentioned. We will defer the discussion of these claims until after disposition of the other questions.

As the matter of size and dimensions are important in connection with the prior art and the size of the alleged infringing diaphragm as will presently appear, we now quote from the file-wrapper of the patent, a letter addressed by the applicant's attorneys to the Commissioner of Pat-

ents Dec. 5, 1913, as follows: "with reference to claims 17, [fol. 175] which specifies a tympanum exceeding nine inches in diameter, it is submitted that the size of the tympanum is what enables it to effect direct regeneration of the sound. When a horn is employed for transferring high tension disturbances, the size of the tympanum is immaterial. Applicant has practically demonstrated that, to effect direct regeneration from the records of the sounds, a light, vibratile tympanum of substantially nine inches in diameter, or greater must be employed, to obtain faithful reproductions." This was in response to a letter from the Patent Examiner to the attorneys as follows: "Claim 17 is rejected on Kraemer (890,142). The size of the diaphragm is not a patentable limitation."

The defenses interposed by appellee are no invention and no infringement. The appellee's device, the Rola radio loud speaker, also has as a central conical portion a paper cone, but the rim or annulus is of soft kid leather. The paper cone is 7 9/16 inches, and the outer circumference of the movable portion of the annulus, or rim, is 9 11/16 inches. These dimensions are important as will shortly appear.

The Cone

The claims of the Hopkins patent for an "Acoustic Device" (1,217,529), are based primarily upon the proposition that a new method of propagation of self-sustaining sound waves without the intervention of a horn had been discovered. It is explained in the appellant's brief that the sound-box and horn method of reproduction of sounds de- [fol. 176] pends upon the vibration of a small diaphragm constituting one wall of a casing called a sound-box, which vibrates in the confined air in the sound-box and sets up sound waves or impulses of high pressure and small area, that these waves or impulses cannot travel through the air to the ear of the listener and there accurately reproduce the original sounds without modification and that the horn attached to the sound-box is for the purpose of reducing the pressure and extending the area of these sound-box impulses, while, on the other hand, the inventor claims that his device reproduces these large area, low pressure sound waves, without any horn, directly by the vibration

of the above-described tympanum, "and in this manner eliminates phonograph and horn sounds." Such an invention was a notable achievement in the art of reproducing sound, while the trumpet, bugle, horn, on the one hand, and the cymbal on the other, would seem to carry back to remote history these two methods of sound production as distinguished from reproduction.

In sound-reproducing instruments where the vibrations are produced mechanically, as a new sort of echo of sounds made by other instruments or methods, and at other times; the method of Hopkins, for producing sound waves of large area and low pressure so far as it involves a large paper cone, is clearly anticipated by a sound-reproducing device discovered and described by Sydney G. Starling, B. Sc., A. R. C. Sc., F. Phys. S., and W. Cole, F. L. S., in the [fol. 177] Talking Machine News of London, England, of July, 1907, under the title "The 'Vibratophone': A New Phonograph." The purpose of Starling and Cole as stated by them was as follows: "Our object in the first place, was to produce a diaphragm which would be large and rigid enough to set sufficient air in vibration to product audibility without the aid of a trumpet. Our paper cone must be looked upon as a modified diaphragm and not in any sense a trumpet." Their right cone was specified in the drawings as about eight inches in diameter at the base, with an altitude of about two and one-half inches. It will be noted that these dimensions of base and altitude are slightly larger than the minimum for the appellant's cone, whose base was 7.2 inches (eight-tenths of nine inches), and corresponding altitude one fourth of 7.2 or 1.8 inches. For a cone of 8 inches, appellant's corresponding altitude would be one fourth thereof or, 2 inches. Appellant says of the Hopkins patent that: "[illegible] stated object of this patent is the direct propagation of sound waves of correct intensity, amplitude, pitch and timbre on free air as distinguished from indirect reproductions of sounds by means of a 'reproducer or sound box and the horn' commonly used for sound production." The device of Starling and Cole, a rigid and thin paper cone of "cartridge drawing paper" vibrating with the phonograph needle or stylus, by the transmission of the vibrations of the stylus to the apex of the cone, was a workable device for a phonograph

and can be used as a radio loud speaker, but has the defect of blasting on certain lengths of sound waves particularly [fol. 178] where used with the relatively high power available in the radio art. This anticipation of the Hopkins patent would seem to eliminate his claims of prior discovery, so far as the conical part of the tympanum is concerned, and also so far as his claims are based upon a new and important discovery in the art of sound reproduction by utilizing a diaphragm acting directly on free air to produce self-sustaining sound waves, as distinguished from those produced in a closed sound box and amplified by a horn.

Aside from the pure echo the art of sound reproduction in modern times first attained important significance in the telegraph, then the telephone and then the phonograph and now the radio. The appellant seeks to gain the advantage of the application of his invention of a sound-reproducing device, intended primarily for the phonograph, to the new art of radio reproduction of sound. It is proper that it should do so, if its claims can be substantiated. It is, however, to be noted that the prior art of sound reproduction as developed in the telegraphic or telephonic art is also available to the radio engineer and inventor. The radio engineer, in his efforts for faithful sound reproduction, has at his command something entirely new to the art of sound reproduction as developed in the phonographic art, that is to say, relatively unlimited power. It is obvious that this asset in radio engineering may make it possible to utilize smaller diaphragms for the purpose of producing self-sustaining sound waves in free air, and hence make available patents and principles utilized in the art of sound reproduc- [fol. 179] tion before the Hopkins discovery appeared in this already greatly crowded field. The evidence in this case discloses that this can be done. Several loud speakers each constructed in accordance with a patent issued for telephonic or telegraphic or phonographic reproducing devices, each with a diaphragm smaller than the dimensions of the Hopkins diaphragm, all prior in the art to the Hopkins patents in suit, were demonstrated before the trial court, as radio loud speakers. The Maxwell device hereinafter described proved superior to the appellant's

device nor the appellee's without the addition of a baffle satisfactorily covered the range of sound vibration used in radio broadcasting of from 100 to 5,000 cycles. The appellee's device without a baffle was unsuccessful below 250 cycles. The test showed that the Hopkins device, constructed according to his patents, "rattled and blasted" at some frequencies below 8,000 although the exact point where such effects appeared is not made clear by the evidence, while the appellee's device without a baffle and with its construction of a soft kid annulus, with a felt welt to prevent the free passage of the air from back to front of the cone, did not "blast" up to 8,000 cycles.

If these prior inventions are applicable to the new art, and are diaphragms, vibrating in free air, and producing self-sustaining sound waves, without the aid of horn or trumpet, how would the appellant escape the claim that he had infringed these earlier patents if they were still in force, when he sought to invade this new field, or art, [fol. 180] with his later device where their earlier devices accomplish exactly what he claims to do and in the same manner?

If he were first in this field with his invention, how could these earlier devices, if later, instead of earlier, escape his claim of infringement?

"That which infringes if later would anticipate if earlier." (Knapp vs. Morss, 150 U. S. 221, 228, citing Peters vs. Active Mfg. Co., 129 U. S. 530, 537; Thatcher Heating Co. vs. Burtis, 121 U. S. 286, 295; Grant vs. Walker, 148 U. S. 547, 554; Gordon vs. Warder, 150 U. S. 47; Lektophone Corp. vs. Brandes Products Corp., 16 Fed. (2d) 934, 935.) The point is that in the new art the dimensions of the cone part of the diaphragm or of the diaphragm itself are relatively unimportant, and that this fact must be given due weight in determining the adaptability of the prior art to the new art. Appellant's patent is based on his representation therein, and on the representations of his attorney that in the propagation of self-sustaining sound waves from a phonographic record by a vibrating diaphragm, without the aid of a horn or trumpet, the size and dimensions are of the essence of the invention. Apparently this is not true in the radio art. The Rola cone, according to these representations of Hop-

kins, is too small to operate as a phonographic loud speaker, as the Hopkins device is claimed to do; and it required amplifying devices, increasing its power, and also a baffle and other devices to prevent sound interference, in order to operate successfully in the radio field.

[fol. 181] The Annulus

Before discussing the prior art of sound reproduction further we will consider an important phase of the appellant's contentions based upon his method of connecting the cone to the stationary ring by an annulus of the same material as the cone, constituting an integral part of the tympanum. The cone of Starling and Cole loud speaker was free at the base. The appellant places great stress upon the annulus and upon its being firmly secured to a rigid rim of metal, as distinguishing his device from theirs. It seems that when a cone of thin paper with a free base, such as Starling and Cole invented or proposed, is violently vibrated to reproduce sounds, on certain pitches, that is, with a certain number of vibrations, the free edge of the cone ceases to vibrate bodily with the balance of the cone. Its vibrating edge divides itself into nodes and loops—the nodes are the stationary points, and the loops the portion where the edge vibrates between these stationary points. This causes the cone to produce sounds of its own on certain pitches as well as to reproduce sound, and when used as a radio loud speaker causes sharp and unpleasant sounds known as "blasting" to intermingle unpleasantly with the music, or voice, or sound being reproduced. It is claimed that the Hopkins form of tympanum, a cone with an annulus at its base, fixed in place at its outer edge obviates this difficulty, and the evidence shows that it does so to some extent; and that the appellee's loud speaker by its method of securing the edge of the cone to the fixed frame by [fol. 182] limp leather produces the same result and therefore infringes this feature of the patent. Appellee's theory, on the other hand, is that this limp leather connection between its cone and annular metal rim entirely distinguishes it from the appellant's method of making connection thereto, by an integral part of his sounding device or tympanum. This distinction would seem to be well taken so far as sound generating properties are concerned, but upon the question

of the prevention of "bla ting" might be deemed an equivalent of the annulus of appellant's patent, and this point we will now consider.

In that connection it should be noted that Hopkins' patent says nothing of the blasting effect due to the vibration of a paper cone with a free edge. Nor is any claim made upon that point. Nor is it at all clear that the inventor had this point seriously in mind, although he does testify that in his experiments he noted this difficulty with a free edged cone.

On this branch of the subject two points are of importance,—first, the rights of an inventor to accidental and unanticipated results of his invention, and second the state of the prior art, as to anticipation on this matter of "blasting," for most of the prior patents presented in evidence were for a cone with edges firmly secured to a surrounding diaphragm, thus doing away with "blasting" so far as it can be done by firmly securing the edge of the annulus. "Doubtless a patentee is entitled to every use of which his [fol. 183] invention is susceptible, whether such use be known or unknown to him." Potts vs. Creager, 155 U. S. 597, 606. "An inventor is not called upon to state in his specifications or claims all the uses to which his invention may be put. When he has described and claimed his machine or combination and has secured a patent for it, he has the right to every use to which his device can be applied, and to every way in which it can be utilized to perform its function whether or not he was aware of these uses or methods or use when he claimed and secured his monopoly." American Cone and Wafer Co. vs. Denaro, 297 Fed. 913, 916, citing Roberts vs. Ryer, 91 U. S. 150; Miller vs. Mfg. Co., 151 U. S. 186.

These principles applied to the facts of this case would import into this new radio art prior patents, as well as the Hopkins patent, applicable to sound reproduction therein, from the prior arts of phonographic and telephonic sound reproduction, and would apply with equal force to all other such devices, whether atented or not, used in the art of sound reproduction. If the device of the appellant was an invention of a means of preventing "blasting" resulting from a conical vibrating element with free edges, it was anticipated by prior patents which will be shortly discussed.

The question of accidental or incidental discoveries is considered in a recent and difficult case by the Supreme

Court, Chief Justice Taft writing the opinion. Eibel Process Co. vs. Paper Co., 261 U. S. 45, at page 66. There the patent was granted Eibel for an improvement in the Four-
[fol. 184] dinier paper-making machine, which consisted solely in elevating the receiving end of the paper-making wire about 12 inches to speed up the flow of the pulp to an equality with that of the paper-making wire and thus greatly increasing the output of the machine. Barrett and Horn had received a patent for elevating the breast roll, and the paper-making wire three inches for the purpose of hastening the drainage of the water content of the pulp that flows on the wire constituting between 135 and 200 times the weight of the commingled paper-making fibres of the wood pulp. The opinion thus states the contention and the answer thereto. "It is contended on behalf of the defendant that whether Barrett and Horne perceived the advantage of speeding up the stock to an equality with the wire, yet the necessary effect of their devices was to achieve that result and therefore their machine anticipated Eibel. In the first place we find no evidence that any pitch of the wire, used before Eibel had brought about such a result as that sought by him, and in the second place if it had done so under usual conditions, accidental results, not intended and not appreciated, do not constitute anticipation." Citing Tilghman vs. Proctor, 102 U. S. 707, 711; Pittsburgh Reduction Co. vs. Cowles Electric Co., 55 F. 301, 307; Andrews vs. Carman, 13 Blatchf. 307, 323. It was therefore held that the previous adoption of a comparatively slight pitch of the screen, but for another and distinct purpose, did not constitute anticipation of the Eibel invention. Judge Coxe in an opinion of the Circuit Court of Appeals, Second Circuit, ap-
[fol. 185] plied this principle to an alleged anticipation by Hammonds patent of an improvement by Hilliard of a typewriter. "Assuming Hilliard's improvement to be present in the machine in evidence, it is difficult to believe that Hammond had an intelligent conception of the invention and failed to make the slightest allusion to it in his patent. If the new function existed in the machines made under the patent, and this is vehemently disputed, it was accidental, unrecognized by the patentee and no disclosure thereof made to the public." It was held on the authority of Tilghman vs. Proctor, 102 U. S. 707, *supra*, not to anticipate Hilliard's improvement. (Hilliard vs. Fisher Book Typewriter

Co., 159 Fed. 439, 441.) From these authorities it would seem to follow that Hopkins' invention did not cover the prevention of blasting effect due to the use of a free cone like Starling and Cole. But it is enough for the purposes of this decision to say that if Hopkins' patent did cover this accidental and incidental result of remedying a defect of slight importance in the phonographic art and of vast importance in the radio art because of the increased power available, such result was just as clearly anticipated by prior patents, and consequently the claims of the patentee in this suit, that the leather annulus of the appellee's device infringes the paper annulus of his patent because it prevents blasting, cannot be sustained on that ground.

We will now refer to some of these prior patents. The [fol. 186] first patent we will consider is that to Lumiere for an acoustical instrument, applied for June 30, 1909, and issued March 14, 1911, for sound reproduction. The object of the invention as stated in the patent was "to provide a diaphragm and a mounting therefore, by means of which sounds may be faithfully recorded and reproduced; which will be sensitive to sound waves and by the use of which the reproduction of sound will be improved and amplified." Among other things it was "to increase the active surface of a diaphragm of a certain given diameter; to increase the diameter of the diaphragm without making it liable to vibrate in parts, or to *set up nodes or inactive portions in the diaphragm* (italics ours), or in other words, to substantially increase the size of the diaphragm and, at the same time, have it vibrate throughout; * * *. It is found that the effect of bringing the surfaces of the vibrating body into a condition of molecular stress by torsion, is to reduce by a minimum the tendency of the vibrating body to form nodes during operation, so that the surface or surfaces of the diaphragm will vibrate as a whole and will not produce the disagreeable effect which is technically known as blasting or shattering." Thus it will be observed the inventor recognizes and attempts to overcome "blasting." The diaphragm is securely fastened to an outer metallic rim. The surface of the diaphragm is not flat but is a "fan-like series of radially disposed ridges and furrows, the ridges on one side of the diaphragm corresponding to the furrows on the other side of the diaphragm, and the furrows gradually [fol. 187] widening out and becoming less deep as they ap-

proach the edge of the diaphragm until at its perimeter the diaphragm lies in one plane." The form of the diaphragm might be described as a right cone, with an altitude equal to the depth of the furrow, about a half inch, containing about thirty-six ridges, each crest of a ridge, being a generator of the flat cone, lies in the surface of the cone, with the paper between these ridges projecting downward until the bottom of the "furrow" touches the base of the cone—in other words the ridges are in the plane of the surface of the cone and bottom of the furrows are in the plane of the base of the cone. The patentee comments on the diameter of his cone or diaphragm as follows: "Moreover, a diaphragm constructed in the manner above described can be usefully made of considerably greater diameter than has heretofore been possible. Experience has seemed to prove that a plane diaphragm of mica, or other material, such as is used at the present day if made of more than about three and one half inches in diameter loses in quality of reproduction, the reproduction becoming less musical and there being a liability to what is technically known as shattering due probably to the diaphragm not vibrating as a whole, i. e., the setting up of nodes in the diaphragm. I have found, however, that I am able to make a diaphragm according to the present invention as large as ten inches or more in diameter without impairing the quality of the reproduction, and by means of this diaphragm at the same time obtain a much greater volume of sound than with the smaller diaphragm. [fol. 188] This amplification of sound, which the patentee states in his patent he believes to be due to the increased diameter and surface of the diaphragm constructed as above described, in such that the "volume of sound produced is sufficient to enable me to dispense with the usual amplifying horn and in this way much of the metallic and hollow character usually associated with talking machine reproduction is eliminated." "Diaphragms may be made according to this invention of any suitable elastic material, such as paper (which may be varnished if desired), card, celluloid, metal or the like, and the surface, or surfaces of the diaphragm may be put under tension by any suitable means."

While the appearance of the appellant's device is quite dissimilar from that of the Lumiere, the general principles of both would seem to be the same. Lumiere gets uniform

vibration and large surface by tension and by fluting the paper diaphragm, and Hopkins gets both as does Starling and Cole by increasing the altitude of the cone. We use the phrase "cone" as applied to Lumiere's device not to emphasize a geometrical similarity between the two devices, although that is important, but to properly describe the tapering effect of his construction, and its relation to the plane at the perimeter into which ridges and furrows are flattened out. The pleating gives strength in the direction of the application of the vibrations, which is achieved by Hopkins by greater altitude of the cone. The Victor Talking Machine Company manufactured and sold about [fol. 189] 40,000 of these Lumiere diaphragms. In the above quotations from Hopkins' patent it will be observed that he speaks of a corrugated cone, and he might with equal accuracy have referred to a fluted cone as the equivalent of his uniform surface cone.

The Lumiere device presents the idea of a diaphragm of large surface generating a self-propagating sound wave, attached to a rigid frame. This device was operated at the trial as a radio loud speaker.

The Dann and Lapp patent, No. 338,660, issued March 23, 1886, for a telephone transmitter called for a plane diaphragm with a central conical portion. The plane portion attached to a rigid structure, with a four-inch central cone, the device described in this patent was operated successfully at the trial to produce self-sustaining sound waves. The Dann and Lapp patent has all the elements of the diaphragm or tympanum of the Hopkins patent, although the plane portion of the diaphragm is square instead of an annulus. If the material is changed to paper and the diameter of the cone increased in accordance with the teaching of Starling and Cole we have the device of Hopkins in substance, and almost duplicated in construction. Dann and Lapp do not confine their claims to transmitters but claim any other function to which it is applicable in the art of telephony, probably referring to receivers.

The Maxwell patent, No. 216,051, of June 3, 1879, applied for Nov. 7, 1878, for a telephone receiver or transmitter [fol. 190] with a sounding-board of soft pine wood, or other suitable material, with a circular opening covered by a funnel-shaped piece of sheepskin "or like material." The cone of eight-inch base, as the patent states, "I have also

found by experiment that a vibrator that is from seven to eight inches in diameter through the center from one outer edge to another is the most efficient, and that when they are much smaller than this the vibrations made by the vocal organs are of a nasal character," etc. These diaphragms are fastened to and upon the opposite side of a thin board of soft pine or other vibrating material. It is sufficient for our present purposes to note that the conical sheepskin diaphragm is only a part of the vibrating element, the balance being the thin board to which it is attached.

An apparatus such as is described in the Maxwell patent, with a single cone, and another with two cones apex to apex as therein described, were constructed and successfully operated as radio loud speakers at the trial.

In 1898 J. H. Rogers patented, No. 599,867, a telephone transmitter of the conical sounding-board type, secured to the vibrating electrode at its apex, with the mouth of the cone turned either toward or away from the electrode, as desired. This conical sounding-board he calls a target. Of it the patent states, "The target or sounding-board is by preference made of some thin light material, which is not detrimentally affected in any way by moisture. Celluloid has been used for this purpose, but other similar light [fol. 191] elastic substances will do as well." The patent states the cone form to be preferable, saying, "It is believed that the conical form is most efficient because of not having any particular tone of its own, but being capable because of its gradual diameters to respond to any and all tones." It is therein also stated "that the sounding-board may be made of any desired size." Here we have a free conical sounding-board operating to vibrate a magnet at its apex in response to sound waves, and thus set up vibrations in an electric current. Reversed as a transmitter it presents a thin vibrating conical sounding-board of any desired size operating in free air in response to fluctuating power applied at its apex.

The British patent office in 1911 granted to Sidney George Brown, an electrical engineer, a sound-reproducing device with a diaphragm very similar to that proposed by Hopkins, as some quotations therefrom will show, although, be it said, the dimensions of the diaphragm are not specified, and it is proposed to use it in the usual sound-box of a

phonograph or gramaphone presumably with the usual horn attachment.

"In the ordinary sound-box," the patent to Brown states, "arrangements of gramaphones and the like, one end of the stylus bar or lever is attached to the center of the diaphragm and the latter is gripped peripherially, with the result that since it is not absolutely free to vibrate freely at all points on its surface, its responsiveness to vibratory influences is very far from being efficient. Moreover, it is [fol. 192] usually comparatively heavy with the result that its inertia makes it sluggish in action.

"With a view to removing some of the constraint put upon the diaphragm by reason of its *periphical* mounting, it has been proposed to form it with a conical center portion and a resiliant flange portion so that the conical center portion the apex of which is secured to the stylus bar or lever, may vibrate as a whole; in such a construction, however, the dampening and constraining action of the flange portion is in my opinion too great to ensure acoustical efficiency. It has also been proposed to transmit the vibrations of the stylus bar to the conical diaphragm through a connecting rod and to mount the diaphragm peripherially by a flexible mounting of a folding character such as gold beaters skin to insure a movement of the diaphragm as a whole." He holds that the mounting should be at the apex of the cone and that the periphery must either be entirely free, or be connected to the casing or other stationary part by material so light and thin that no appreciable peripheral restraint is exercised. He thus leaves the cone either free or connected to the casing by "a ring of resilient material of extreme thinness," considerably thinner than the periphery of the conical diaphragm. The conical diaphragm he forms of thin aluminum or aluminum alloy of an average thickness of 2½ thousandths of an inch; for the ring or annulus he suggests "extremely thin resilient material such as glazed tissue paper one three-thousandth of an inch thick [fol. 193] or thin collodion film. The width of the annular space must be either so small that the two air regions on the two sides of the diaphragm may be considered as without communication with one another or the ring of material must be used. In other words, the annulus must be utilized as a buffer, if the cone is vibrated in relatively free air. The annulus, he says, may be connected with a stationary

ring. If the dimensions of this sound-box device of Brown be multiplied by four, if one may estimate its size, it would be approximately the size of the devices of the appellant and of the appellee. It would differ from both in the annulus or ring, in that the appellant's device treats the annulus as a part of the sound-producing diaphragm; it would in that respect more closely conform to the appellee's device, but the latter differs from the teaching of Brown's patent in that the flexible annulus is of relatively thick and heavy leather, operating as a drag on the movement of the periphery of the base of the conical diaphragm. Both the appellant's and the appellee's device have an annulus capable of acting as a buffer, to prevent to some extent the sound waves generated from the back of the cone interfering with those generated by the forward portion of the cone. So far as the case at bar is concerned, the notable teachings of the Brown patent are (1) a light conical diaphragm, (2) connected at its apex with the stylus or source or vibratory power, (3) connected by a plane annulus with a stationary ring or side of the device, (4) permitting the cone to vibrate [fol. 194] as freely as possible in the direction of its axis, (5) the ring to act as a buffer between the waves generated by the front and back portions of the conical diaphragm, (6) that the cone be of extremely light material. It differs most notably in size from the devices of the parties hereto, but its function is the same—to reproduce sound; and as has been pointed out it differs in the material of the annulus. The notable feature of this patent so far as the case at bar is concerned is the emphasis placed by the inventor, upon the annulus connection of the diaphragm and its function. The cone was not new in the art, neither was the idea of the cone connected at the periphery of its base by a resilient "flange." Brown's effort was to decrease the weight of the cone and to decrease the resistance of the flange or rim to the free vibrations of the cone.

Other patents were introduced in evidence but need not be specially considered. Enough has been stated to show that the use of a large cone of paper, or similar material, either unsecured or secured at its base to a vibrating or to a nonvibrating plane, actuated by impulses applied to its apex in free air, for the purpose of generating self-sustaining sound waves, was not new in the art of sound reproduction at the time of the Hopkins patents.

It is obvious that Hopkins entered a crowded field of effort for sound reproduction. The above-mentioned Maxwell patent of a large conical diaphragm with a base of from seven to eight inches in diameter attached to a thin vibrating plane, and secured to the side of a box enclosing [fol. 195] the cone, or two cones in alternate form, shows that the loud-speaking or self-sustaining sound reproducer was invented in connection with the art of telephony. Practically every element in the Hopkins patent was known to the prior art. It follows that if Hopkins by a nice and suitable adjustment of these elements produced a combination which in the form proposed was peculiarly suited to the problem it was intended to solve, that is, the reproduction of sound waves from a phonographic record in substantially the form and intensity of the sound to be reproduced, the patent should be confined to a narrow limit, and when an attempt is made to carry over into another art the monopoly granted by his patent in this narrow field of the phonographic art his claims of monopoly in this new art should be carefully scrutinized, for in this field the public is entitled to utilize all the old forms of sound-producing devices, if dedicated thereto, and if not, the owners of prior patents are entitled likewise to extend their monopoly thereto.

In short, the appellant seeks to crowd out of the new art improvements upon devices already in existence in the art of sound reproduction, on the ground that although different in form from his device, they constitute either colorable alterations thereof, or improvements thereon, necessarily utilizing his device as a base. But as has already been pointed out, his basic idea of a direct propagation of self-sustaining sound waves from a sounding-board or diaphragm operating in free air had been anticipated.

[fol. 196] On the question of infringement the appellee points out the flexible leather connection between the paper cone and the metal rim in its device; and that in the appellant's device this connection is an integral part of the vibratory diaphragm, and of the same crisp material required for the cone; that the outer edge of the appellee's flexible rim is less than the minimum declared necessary in the appellant's patent and in its file-wrapper letters to the Patent Office; it points out that, true to the statements in the Hopkins patent, appellee's cone device,

and flexible rim, and metal frame will not produce satisfactory sound reproduction without other accessories. To prove that fact the appellee constructed a loud speaker with these elements alone, and demonstrated to the satisfaction of the trial judge that such a speaker was unsatisfactory. The appellee points out that there is an inherent difficulty in the use of a free cone in a radio loud speaker due to the fact that the cone operated in free air tends to generate sound waves on both its inner and its outer surface. That while the wave on one side is being started by pressure, on the opposite side another wave is being started by decreasing pressure, both waves originating by the same forward or backward movement of the cone. These waves meeting at the edge of the cone do not harmonize and tend to modify and to some extent neutralize one another.

To overcome this tendency the appellee attaches the metal rings to which his annulus is secured to a board, called a baffle board, which extends the plane of the base of the [fol. 197] cone several inches, thus further separating the two conflicting sources of sound waves. The appellee also uses felt pieces, on the metal ring, or rim to prevent its vibration, and surrounds the back of the cone, with a container partly filled with felt. By these devices the appellee has perfected a loud speaker using a smaller cone than Hopkins thought possible in his claims for a patent. The appellee's device by reason of its dimensions does not infringe claims 1, 2, 3, 5, 6 or 7, of the Hopkins patent with respect to a tympanum "having a free area exceeding nine inches in diameter and a conical portion, the diameter is not less than eight-tenths of the diameter of the said free area." It is claimed, however, that it does infringe claims 4 and 8, which are as follows:

"4. An acoustic device, comprising a tympanum support having a circular aperture, and a light tympanum freely exposed to unconfined air and having its outer edge rigidly mounted on said support in said aperture; said tympanum having a central conical portion, the base of which exceeds in area one-half the effective area of the said tympanum; the tympanum being of sufficient area to impart to the surrounding free air, when vibrated, sound waves substantially corresponding in intensity to the original sound waves.

"8. An acoustic device, comprising a tympanum embodying a bodily movable, central conical portion, and an an- [fol. 198] nular rim which encircles said conical portion and which is rigidly supported, said conical portion being freely exposed on all sides to unconfined air and being of sufficient area to produce self-sustaining sound waves in the surrounding air when vibrated, substantially as described."

Claim number four is indefinite as to the size of the tympanum, but the patentee both in the patent and in his letters, in which he stated, and truthfully, that size is of the essence of his patent, gives nine inches as the minimum size workable in his plan for self-sustaining sound waves generated in free air by a phonographic needle. This claim, No. 4, is made evidently to cover the relative area of the annulus and the cone. The question of estoppel is raised by the appellee, who claims that the patentee is estopped to claim a lesser diameter than nine inches for the tympanum. Claim number eight is substantially identical with claim number four, except that in the latter the relative area of the base of the cone and of the tympanum is not stated and also is left indefinite. Here the diaphragm is merely described as composed of a central conical portion and an annular rim, freely exposed to unconfined air, "being of sufficient area to produce self-sustaining sound waves, in the surrounding air when vibrated substantially as described."

The representations or arguments of the patentee in the patent proceedings do not under the circumstances here disclosed constitute an estoppel. American Cone and Wafer [fol. 199] Co. vs. Denaro, 297 Fed. 913; Fullerton Walnut Growers Assn. vs. Anderson-Barngrover Mfg. Co., 166 Fed. 443; R. Hoe & Co. vs. Goss Printing Press Co., 30 Fed. (2d) 271, 275. We must, however, either hold these claims void for indefiniteness or that the claim only covers a slightly smaller or larger cone which will, in the operation of a phonograph (by the use of lever connections, decreasing the amplitude of vibration about one-half), produce sound waves of such volume as will be "of substantially the same intensity as the original." In either case it is clear that the defendant-appellee does not infringe said claims for so used its alleged infringing diaphragm would not accomplish the object or measure up to the standard set up by the appellant.

We have not so far alluded to the commercial aspects of the case. The cone type of radio loud speaker is widely used. The appellant's witnesses estimate that a million and quarter of the type here involved have been sold. The appellant has never manufactured a radio loud speaker. The first radio loud speaker of the cone type was made in 1921 by Mr. Ferrand, a licensee of the appellant and now a stockholder in the appellant corporation, "after several years experiment." If the Hopkins patent was a basic and generic patent on the form and use of a large diaphragm or soundingboard to produce self-sustaining sound waves, this great production would be strong evidence of its utility, and consequently of his invention, but the evidence here simply indicates that the appellant has been remarkably [fol. 200] successful in levying tribute upon a new and rapidly extending art. He has succeeded in asserting a monopoly in a new field, not in contemplation at all by the patentee when he made his invention. We cannot see that this success is as persuasive as such evidence sometimes is, as to the exercise of the inventive faculty. The appellant has been active in asserting its alleged monopoly, and has thus, no doubt, forced many to buy their peace in a situation so full of doubt, confronted by such dire penalties, as are involved in unsuccessful patent litigation. See Lektophone Corporation vs. Sylo Lighting Fixture Co., 11 Fed. (2d) 421, 16 Fed. (2d) 7; Lektophone Corp. vs. Western Electric Co., 16 Fed. (2d) 10, 20 Fed. (2d) 150; Lektophone Corp. vs. Brandes Products Corp., 20 Fed. (2d) 155; Lektophone Corp. vs. Rola Co., 27 Fed. (2d) 758. We are in accord in general with the views expressed by the Circuit Court of Appeals of the Second Circuit in Lektophone Corp. vs. Sylo Lighting Co., 16 Fed. (2d) 7, supra, and in Lektophone Corp. vs. Western Electric, 16 Fed. (2d) 10, supra, as to noninfringement, and like that court find it unnecessary to pass upon the validity of the patent, limited as its interpretation must be by the state of the prior art, and by the intended application of the device to a phonograph. We are also in accord with the decision of that Circuit Court and that of the Circuit Court of Appeals of the Third Circuit in Lektophone Corp. vs. Brandes Products Corp., 20 Fed. (2d) 155, holding invalid claims 29 and 30 of patent No. [fol. 201] 1,271,527, but we cannot follow the latter decision

in so far as it holds that a flexible, nonresonant rim or annulus connecting the cone of the diaphragm to the stationary metal rim is the equivalent in a sound-reproducing device of the flat rim or plane annulus of Hopkins tympanum, for the reasons heretofore stated; namely, that Hopkins made no claim to a nonresilient connection of the cone to the metal frame, as a preventative of blasting, and that such a flexible connection was anticipated as above indicated as early as 1879 by Maxwell and in 1910 by Brown. Futhermore the method of connecting a central vibrating cone at the base of its perimeter to a circumscribing vibrating body, square or circular in perimeter, and of securing the latter to a stationary frame was frequently used in the art of sound reproduction, as appears from the above discussion.

In this connection it should be observed that the Appellate Court is somewhat in the same position, with reference to the experiments, or demonstrations conducted in the presence of the Trial Court, as it is with reference to the witnesses which appear before it. Unless we are, in effect, to try the case de novo on appeal, which is not permissible, we must rely upon the judgment of the Trial Court as to what was demonstrated before it. One of the most unpromising of sounding-board exhibits, that is, one departing most from the appellant's specifications, for a sounding-board or diaphragm, was, without objection, demonstrated during the argument before us. A large plane and a very [fol. 202] small cone in this demonstration seemed to satisfactorily reproduce music, being broadcast by radio. It appears from the record that most of the exhibits constructed by the appellee in accordance with prior patents, satisfactorily reproduced self-sustaining sound waves, and satisfied the Trial Judge that the appellant's device was merely an enlargement of designs already available to the radio art in the Patent Office, and also that the appellee's device operated with the parts alleged to infringe the appellant's patent failed to satisfactorily reproduce such sounds within the required range, thus proving to his satisfaction that the flexible elastic, nonresonant annulus was not the equivalent of the appellant's resonant annulus, and also that the appellee's diaphragm was too small without other accessories to operate as the appellant's device was claimed to do. That is to say, the proof before the Trial

Judge showed to his satisfaction that the attorneys for the patentee told the truth when they represented to the Patent Office that the dimensions stated in their application were of the essence of the invention. Our view as to annulus of the diaphragm in the appellant's device seems to be in accord with that expressed by Mr. Justice Tomlin of the High Court of Justice of Chancery Division of Great Britain in dealing with the alleged infringement of the appellant's device by the diaphragm of the Mascot Radio loud speaker, having an annulus of thin, nonresonant paper.

We must either hold that the appellant's device is void for lack of invention or that he is so narrowly confined by [fol. 203] the specified dimensions and claims of his patent that the smaller device of the appellee, with its limp leather annulus, does not infringe. It is sufficient for the purpose of this case to follow the latter course, as the Trial Judge did.

Judgment affirmed.

[File endorsement omitted.]

IN UNITED STATES CIRCUIT COURT OF APPEALS FOR THE NINTH CIRCUIT

No. 5712

LEKTOPHONE CORPORATION, a Corporation, Appellant,

vs.

THE ROLA COMPANY, a Corporation, Appellee

Appeal from the District Court of the United States for the Northern District of California, Southern Division

DECREE—Filed Sept. 23, 1929

This cause came on to be heard on the Transcript of the Record from the District Court of the United States for the Northern District of California, Southern Division, and was duly submitted.

On consideration whereof, it is now here ordered, adjudged, and decreed by this Court that the decree of the

[fol. 204] said District Court in this cause be, and hereby is, affirmed, with costs in favor of the appellee and against the appellant.

It is further ordered, adjudged and decreed by this Court that the appellee recover against the appellant for its costs herein expended, and have execution therefor.

[File endorsement omitted.]

IN UNITED STATES CIRCUIT COURT OF APPEALS

ORDER STAYING ISSUANCE OF MANDATE—Filed Oct. 21, 1929

Upon application of Mr. Charles M. Fryer, on behalf of counsel for the appellant, and good cause therefor appearing, it is ordered that the issuance, under Rule 32, of the mandate of this court in the above cause be, and hereby is stayed to and including November 23d, 1929; and in the event the petition for a writ of certiorari to be made by the appellant herein be docketed in the Clerk's office of the Supreme Court of the United States on or before said date, then the mandate of this court is to be stayed until after the said Supreme Court passes upon the said petition.

Frank H. Rudkin, United States Circuit Judge.

Dated San Francisco, California, October 21, 1929.

[File endorsement omitted.]

[fols. 205-207] Clerk's certificate to transcript of record omitted in printing.

[fol. 1] PLAINTIFF'S EXHIBIT No. 1

[Endorsed:] No. 1726—Eq. United States District Court. Lektophone vs. Rola. Pltfs. Exhibit No. 1. Filed 5/10/28. Walter B. Maling, Clerk. By A. C. Aurich, Deputy Clerk.

No. 5712. United States Circuit Court of Appeals for the Ninth Circut. Filed Feb. 5, 1929. Paul P. O'Brien, Clerk.

(Here follows drawing, side folio 2)

[fol. 3] United States Patent Office

Marcus C. Hopkins, of New York, N. Y., Assignor, by Mesne Assignments, to Lektophone Corporation, of New York, N. Y., a Corporation of Delaware

229,014

Acoustic Device

Specification of Letters Patent.

1,271,529. Patented July 2, 1918

Original application filed July 14, 1913. Serial No. 778,826. Renewed March 22, 1918, Serial No. 224,048. Divided and this application filed April 17, 1918. Serial No. 229,014.

To all whom it may concern:

Be it known that I, Marcus C. Hopkins, a citizen of the United States, residing in the borough of Manhattan, city, county, and State of New York, have invented certain new and useful Improvements in Acoustic Devices; and I do hereby declare the following to be a full, clear, and exact description of the invention, such as will enable others skilled in the art to which it appertains to make and use the same.

This invention relates to instruments which reproduce sounds; and is particularly directed to the attainment of a direct propagation, in free air, from a record or equivalent element subjected to the action of the original sound waves or vibrations, of self-sustaining sound waves substantially corresponding in intensity and amplitude, as well as in pitch or timbre, to the said original sound waves as distinguished from an initial generation of violent air disturbances in a confined space, and a subsequent transformation of such disturbances into self-sustaining sound waves by means of a megaphone, horn or other amplifier.

M. C. HOPKINS.
ACOUSTIC DEVICE.
APPLICATION FILED APR. 17, 1918.

1,271,529. Patented July 2, 1918

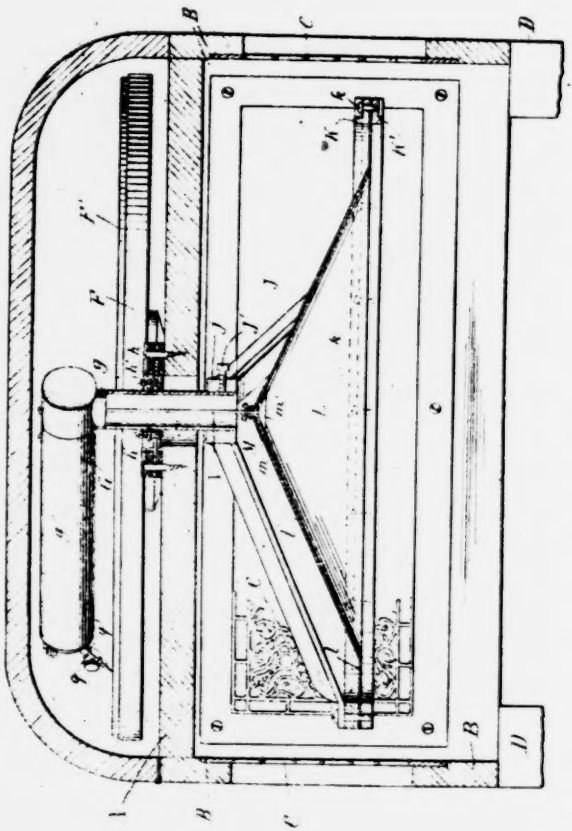

Inventor
Marcus C. Hopkins
By Attorneys
Pennie, Davis, Marvin & Edmonds

In the case of a talking machine, the device employed to propagate the regenerated sound waves in air comprises the reproducer or sound-box and the horn; but the reproducer alone is incapable of propagating sound waves of the character above stated because of the fact that the air disturbances which are produced by its diaphragm and which issue through its mouth-piece are almost immediately dissipated in heat or in waves which are not heard at any considerable distance if the horn be removed. Consequently, it is usual in all instruments of the class indicated to employ an amplifier of some sort to resist transformation into heat and to control the lateral form of the wave during a progressive spreading action which is accompanied by a lessening of the violence of the disturbance until a wave front of great area is attained having a movement appropriate to the sound conductivity of air. In this way, it has been found practicable to transform a satisfactory part of the energy, obtained from a moving record, into self-sustaining sound waves in air; but in every instance such method has been accompanied by distortions of the true recorded sounds in the reproducer, and more particularly in the horn or amplifier, giving rise to those characteristic sounds known as phonograph and horn sounds. These distortions of the true sounds are in a measure impressed upon the record in its making, but are more noticeable in the reproduction, where a suppression of character and overtones, the loss of timbre in instruments and the voice, and the accentuation of notes of certain pitch, so change the recorded number that a faithful reproduction is not obtained.

It is the object of the present invention to regenerate the original sounds directly from the record or other element subjected to the action of such sounds, without interposition of a confined body of air and without the employment of a restrictive transformer, such as a horn. According to the invention, the sound regenerator comprises a tympanum of relatively great area freely exposed to unconfined air, in which the sounds are to be propagated; the vibrations produced by the record or its equivalent,—that is, the element on which the original sounds or sound waves are recorded, or which is otherwise subjected to the vibrating action of said sounds or sound waves and may, therefore, be termed the "sound-vibrated" element—being faithfully trans-

mitted to the tympanum in such manner that the latter excites directly in the free air surrounding it, sound waves of an intensity and amplitude, substantially corresponding to the original sound waves. In other words, the original sounds are directly regenerated by the vibrating tympanum without the interposition of a restrictive or sound-modifying transformer.

The invention consists, briefly, in the provision of a tympanum of novel construction, which is capable of responding to the high frequency vibrations employed in the reproduction of sounds, and of imparting these vibrations to a large body of air; and it is to be considered as a division of the invention shown and described in my prior application, renewed March 22, 1918, No. 224,048.

The accompanying drawing illustrates the improved tympanum incorporated in a sound-reproducing machine of the kind disclosed in said application, the single figure being a vertical sectional view taken transversely through the [fol. 4] machine. Reference may be had to this application for a disclosure of the complete machine; and in order to facilitate an understanding of the present invention as compared with such disclosure, the same reference characters will be employed as in the said earlier application to indicate corresponding parts.

The machine represented in said drawing is mounted within a cabinet having a deck A, upon which the motor (not shown) and the sound regenerator are mounted. Side walls B extend downwardly from the edges of the deck A, and are preferably apertured on all sides and provided with open-work grills C, which afford substantialy uninterrupted air paths for the sound waves from the interior of the cabinet in all directions laterally to the surrounding atmosphere. In the machine shown, the cabinet is bottomless and provided with legs D at its four corners. The motor may be of any suitable type, and is connected to drive the shaft of the turn-table F through the intermediary of gearing, as is usual, said shaft projecting upwardly through the deck A. The turn-table carries the record F', which in this instance is the element directly acted upon by the original sound vibrations which are to be subsequently regenerated or reproduced; that is to say, the record, in the present construction, is the "sound-vibrated" element.

The sound regenerator has a right-angled tubular support G, the vertical arm g of which is engaged at dimetrically-opposite points by bearing screws h', which project inwardly from and are carried by a ring h of larger diameter than the said arm g, as described in said prior application. The screws h' form a horizontal axis perpendicular to the horizontal arm g'' of the right-angled support G, about which axis the arm g'' can swing in a vertical plane, the vertical arm g the while being inclined within the ring h. The latter forms part of an annular bearing device secured upon the deck A, the open central portion of which device alines with an opening of larger diameter in said deck, and the said vertical arm g of the support G extends downwardly through these openings and has its lower extremity fitted in the hub j of a conical spider J and fastened to the same by a set screw j'.

The spider J in the present construction has three arms, only two of which appear, however; and to the lower ends of these arms there is secured by screws an annulus consisting of two ponderous rings, K, K' of metal, which are clamped together by screws k spaced at short intervals. Two of the three arms of the said spider are screwed tightly to the rings K K', and the third is so arranged that the rings K, K' can be secured at varying distances from the foot of this third arm, there being sufficient spring in the spided arms to permit of an adjustment at this point of one-quarter of an inch or so, if desired. This detail is illustrated in my earlier case, and for that reason is not represented in the present case.

The tympanum L, which forms the subject of the present case, is constructed of light, vibratile material and has an annular plane peripheral portion or supporting rim l, the outer edge of which is tightly-gripped and rigidly supported between the rings K, K', and a central conical portion l' rising from the inner edge of the said rim l. If satisfactory regeneration of sounds from a record or other sound-vibrated element is to be had, the whole diameter of the tympanum, that is, the diameter of the aperture in the rings K, K' should exceed nine inches in order that the conditions required to regenerate the sound waves in the manner above described shall be fulfiled. The base of the central conical portion l' should exceed in area one-half of the effective area

of the entire tympanum, that is, the area of the aperture in the rings K, K′; or in other words, the diameter of the base of said conical portion should be at least eight-tenths of the diameter of the said aperture. The altitude of the conical portion l′, should be at least one-quarter of the diameter of its base.

It is, of course, possible to make some variation from the approximate sizes given without materially altering the result; but if the tympanum is constructed as shown in the drawing, any great variation from these proportions will be found to affect the character of the reproduction. It is of vital importance that the tympanum be made of crisp, strong material, having considerable rigidity within itself, and it is also of vital importance that the tympanum as a whole be extremely light and have as little inertia as possible without a weakening effect. The tympanum is shown of conical form with a smooth surface, and this has been found to be very satisfactory. The conical shape is given the tympanum so that shocks or vitrations impressed upon the apex of the cone in a direction toward its base will move the whole cone bodily, the strains being imparted edgewise of the material and no wave motions being set up in the thin material of the cone. The curvature of the walls of the cone precludes the setting up of waves in the material; and the intended object, a simultaneous movement of the whole conical portion of the tympanum, is thus attained. While I prefer to construct the tympanum in the form described and shown with a smooth surface, especially in view of the ease of construction, yet it is possible to form radical or concentric corrugations in the plane peripheral portion l and produce a light, stiff and very satisfactory article [fol. 5] for the purpose. It is conceivable, too, that when the tympanum is provided with corrugations as just suggested, some variation from the proportions above given may be made; but such variations will not be great. The tympanum should preferably be constructed of a colloidal substance, and should be from 3 to 20 thousandths of an inch in thickness according to the crispness or stiff character of the material used. Compressed fibrous material, such as hot pressed paper or fiber, has been found to act satisfactorily.

It will be noted that in the construction illustrated, the arms of the spider J incline downwardly to correspond with the conical shape of the tympanum L, the apex of the conical portion of the tympanum pointing upwardly toward the deck A of the cabinet, and, also, that the concave side of the said tympanum is open to the surrounding atmosphere through the open bottom of the cabinet, no obstructions being presented to the sound waves issuing from the concave surface of the tympanum.

A cap M is secured to the apex of the conical portion 1 of the tympanum, and this cap should be of more rigid construction than the remainder of the tympanum and should preferably be three-eighths of an inch or more in diameter. I prefer to make the cap M of metal, extremely light but very rigid, and in the form of two cones m, m′ screwed tightly together upon opposite sides of the tympanum so as to grip the material thereof with their edges. In order that a tight and positive application of the cones forming the cap M to the conical portion of the tympanum may be had, it is preferably to form the inner cone m′ of lesser angle, and the outer cone m of greater angle than the said conical portion, in which case their edges will securely grip the tympanum material when they are fastened together.

The vibrations or sound waves originally imparted to the record or its equivalent may be transmitted therefrom to the tympanum to vibrate the same in the manner and by means of the mechanism shown and described in my aforesaid application above identified, or by means of some other approved transmission means or mechanism, as will be understood. In any event, such means or mechanism forms no part of the present case, however, and for that reason requires no extended disclosure. It is believed sufficient to state, therefore, that in the arrangement illustrated the mechanism in question is located within the horizontal arm g″ of the support G, and is connected at its forward end with the stylus holder q, the other end of said mechanism having connected to it a vertical rod V, which extends downwardly through the interior of the vertical arm g of the support and is rigidly secured to the cap M of the tympanum. In consequence, the vibrations of the stylus q′ mounted in said holder and produced in the usual way by the phonic lines on the record, will be transmitted from the stylus through the transmission mechanism to the rod V,

which will be vibrated endwise, the endwise vibrations of said rod being directly impressed upon the tympanum L.

I claim:

1. An acoustic device, comprising a tympanum rigidly supported at its periphery and having a free area exceeding nine inches in diameter and a conical portion, the diameter of which is not less than eight-tenths of the diameter of said free area.

2. An acoustic device, comprising a tympanum rigidly supported at its periphery and having a free area exceeding nine inches in diameter and a conical portion, the diameter of which is not less than eight-tenths of the diameter of said free area, said conical portion being rigid in the direction of the axis of the tympanum.

3. An acoustic device, comprising a tympanum rigidly supported at its periphery and having a free area exceeding nine inches in diameter and a conical portion, the diameter of which is not less than eight-tenths of the diameter of said free area, the altitude of said conical portion being substantially one-quarter of the diameter of its base.

4. An acoustic device, comprising a tympanum support having a circular aperture, and a light tympanum freely exposed to unconfined air and having its outer edge rigidly mounted on said support in said aperture; said tympanum having a central conical portion, the base of which exceeds in area one-half the effective area of the said tympanum; the tympanum being of sufficient area to impart to the surrounding free air, when vibrated, sound waves substantially corresponding in intensity to the original sound waves.

5. An acoustic device, comprising a tympanum support having a circular aperture, and a light vibratile tympanum exceeding nine inches in diameter, having its outer edge rigidly mounted on said support; said tympanum being shaped to provide an annular rim adjacent said support, and a conical portion springing from the inner edge of said annular rim, the diameter of the base of said conical portion being not less than eight-tenths of the said circular aperture in said support.

6. An acoustic device, comprising a tympanum support having a circular aperture, and a light vibratile tympanum mounted in said aperture and having its outer edge secured to said support; said tympanum being shaped to provide an

M. C. HOPKINS.

SOUND REGENERATING MACHINE.

APPLICATION FILED JULY 14, 1913. RENEWED MAR. 22, 1918.

1,271,527. Patented July 2, 1918.

5 SHEETS-SHEET 1.

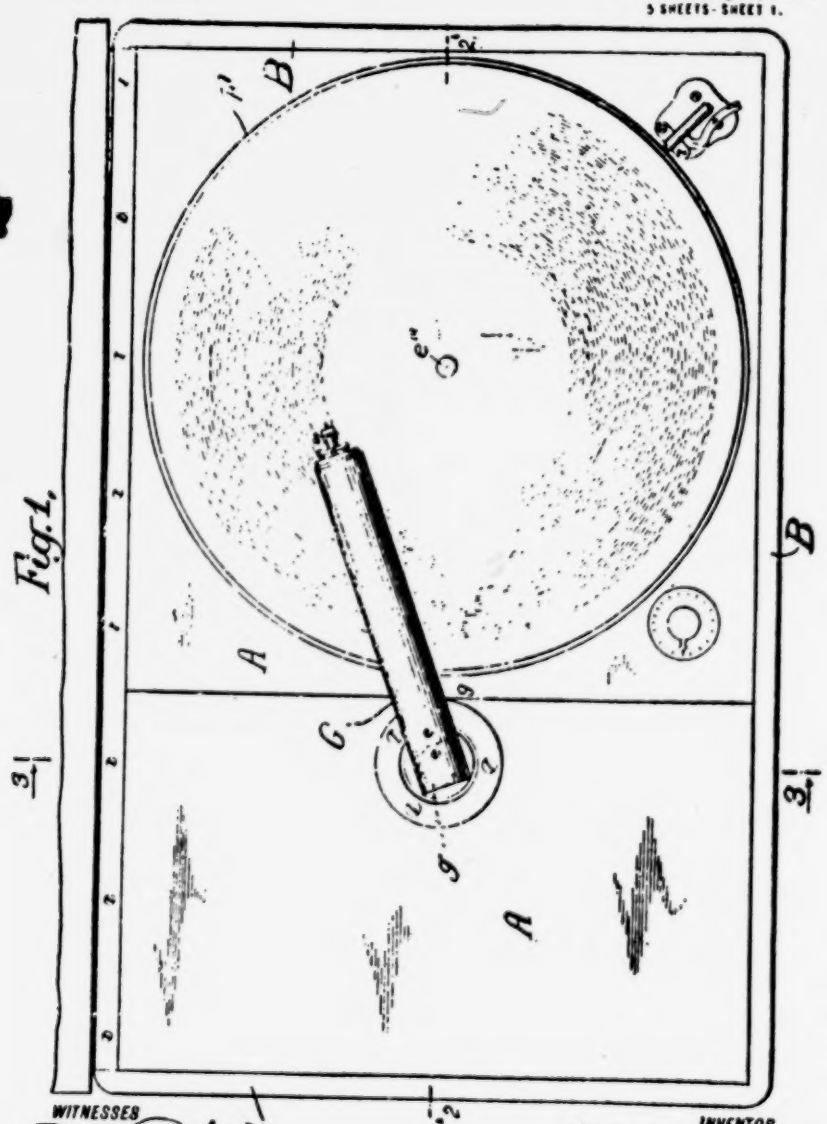

Fig. 1.

WITNESSES

Leon A. Rosenthal

M. A. Bill

INVENTOR

Marcus C. Hopkins

BY

Pennie Davis Goldsborough

ATTORNEYS

M. C. HOPKINS.

SOUND REGENERATING MACHINE.

APPLICATION FILED JULY 14, 1913. RENEWED MAR. 22, 1918.

1,271,527. Patented July 2, 1918.

5 SHEETS SHEET 2.

Fig. 2.

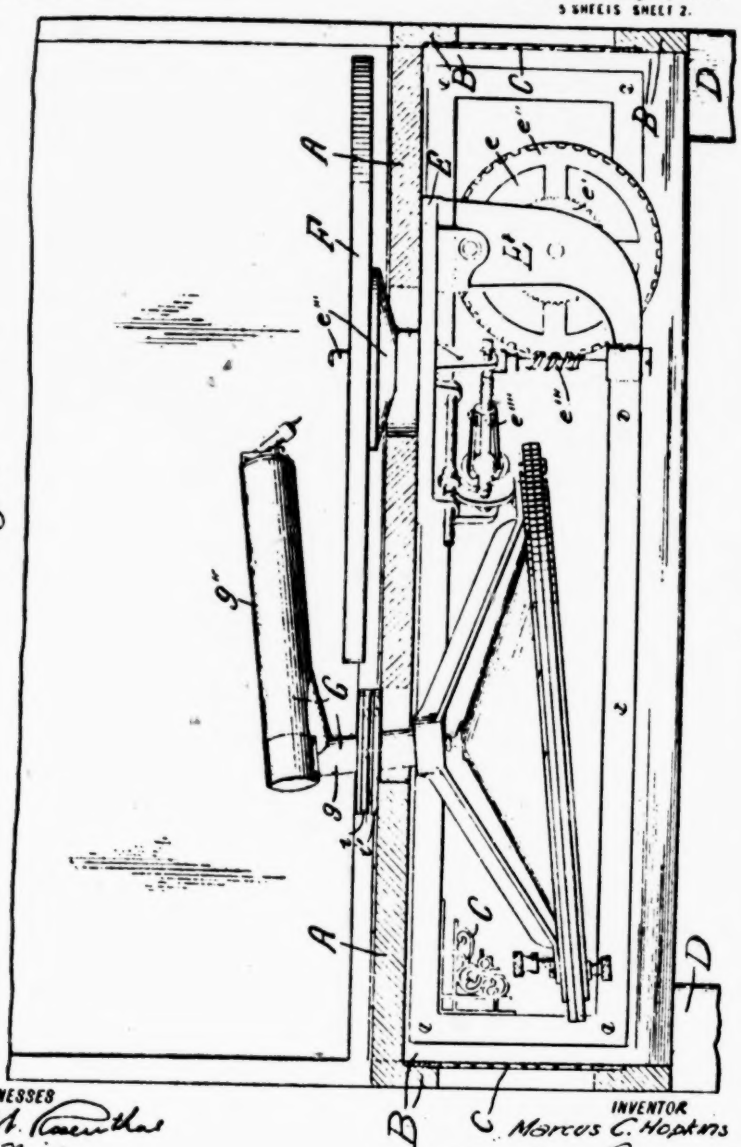

WITNESSES

Leon H. Rosenthal

M. A. Bill

INVENTOR

Marcus C. Hopkins

BY

Pennie Davis & Goldsborough

ATTORNEYS

M. C. HOPKINS.

SOUND REGENERATING MACHINE.

APPLICATION FILED JULY 14, 1913. RENEWED MAR. 22, 1918.

1,271,527. Patented July 2, 1918.

5 SHEETS—SHEET 3.

Fig. 3.

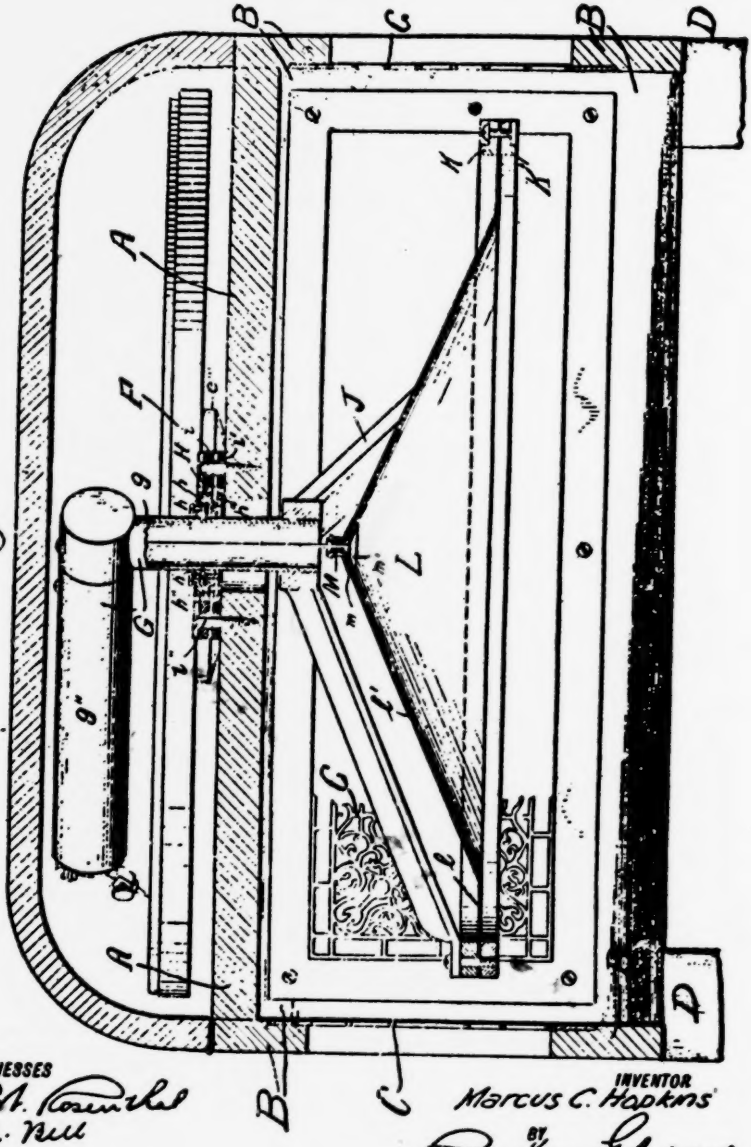

WITNESSES

Leon A. Rosenthal

M. A. Bell

INVENTOR

Marcus C. Hopkins

BY

Pennie Davis & Gladwright

ATTORNEYS

M. C. HOPKINS.

SOUND REGENERATING MACHINE.

APPLICATION FILED JULY 14, 1913. RENEWED MAR 22, 1918.

1,271,527. Patented July 2, 1918.

3 SHEETS-SHEET 4.

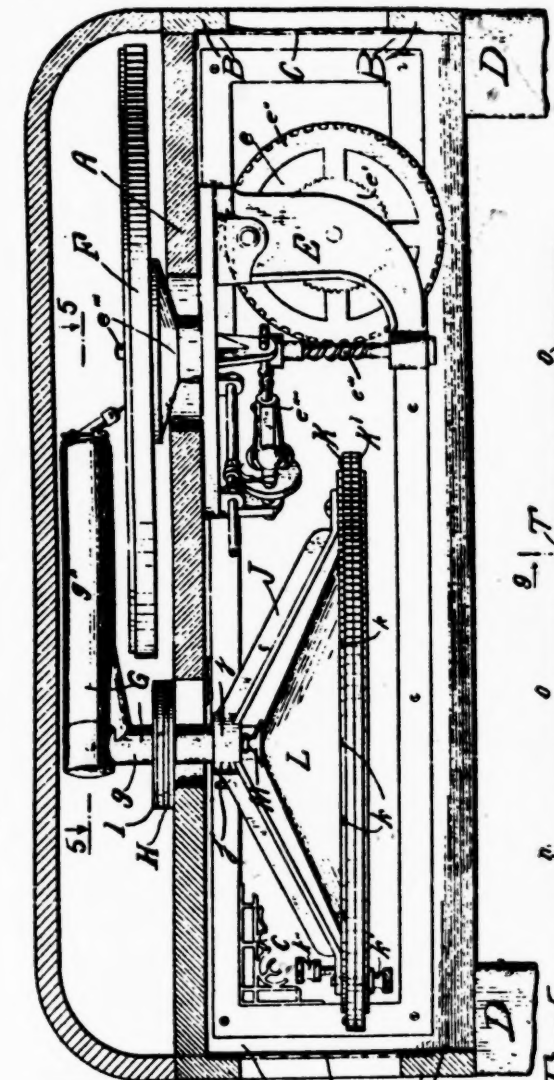

Fig. 4.

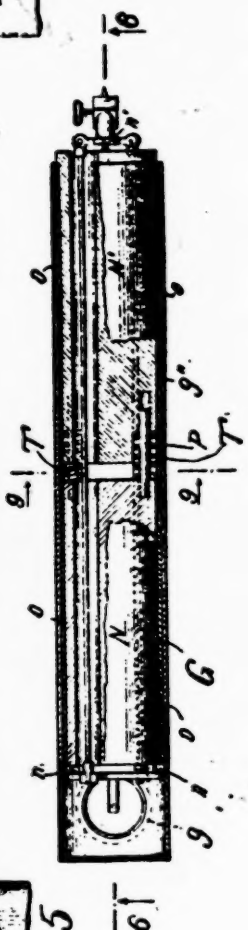

Fig. 5.

WITNESSES

M. A. Hill

INVENTOR.

Marcus C. Hopkins

BY

ATTORNEYS

M. C. HOPKINS.

SOUND REGENERATING MACHINE.

APPLICATION FILED JULY 14, 1913. RENEWED MAR. 22, 1918.

1,271,527. Patented July 2, 1918.

5 SHEETS—SHEET 5.

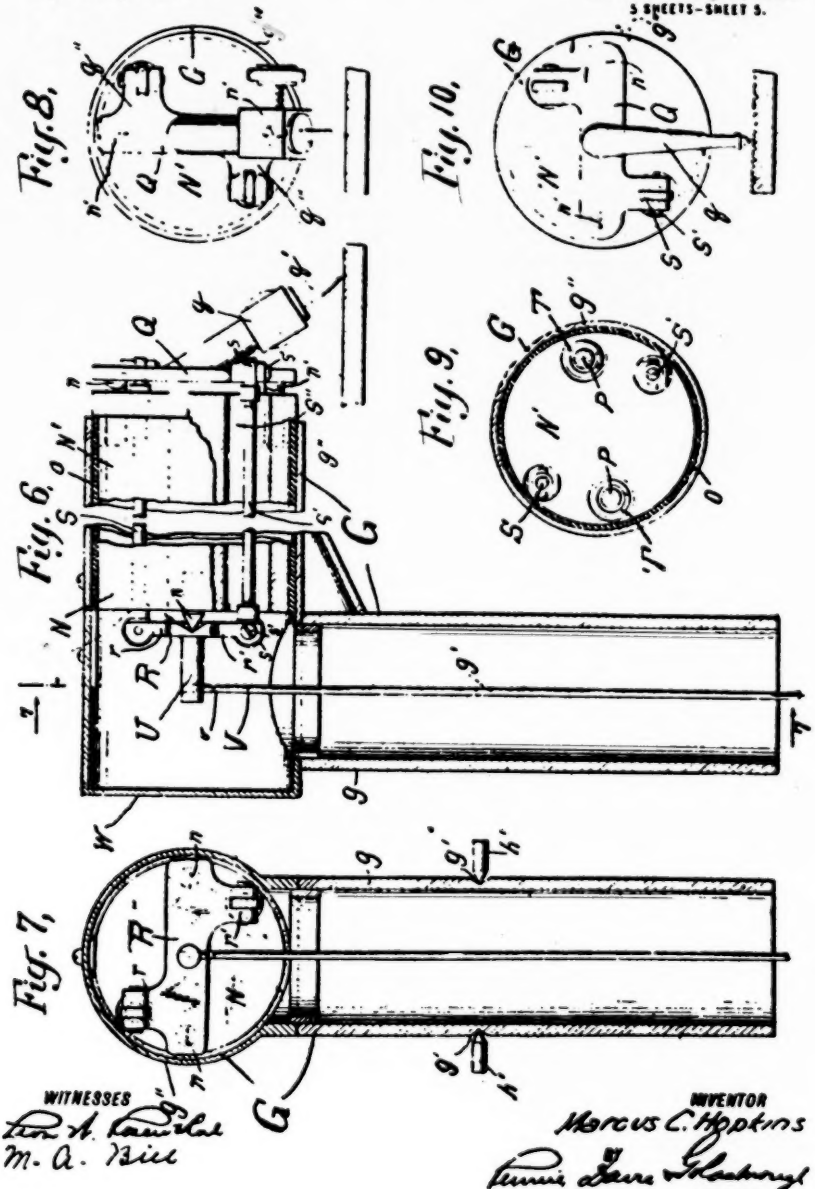

WITNESSES

M. A. Bill

INVENTOR

Marcus C. Hopkins

ATTORNEYS

[fol. 6] annular rim, the outer diameter of which exceeds nine inches, and a conical portion springing from the inner edge of said annular rim, the altitude of said conical portion being substantially one-fourth of the diameter of its base.

7. An acoustic device, comprising a tympanum support having a circular aperture exceeding nine inches in diameter, and a light vibratile tympanum mounted in said aperture and having its outer edge rigidly secured to said support; said tympanum being shaped to provide an annular rim adjacent said support, and a conical portion springing from the inner edge of said annular rim, the diameter of the base of said conical portion being not less than eight-tenths of the diameter of said circular aperture, and the altitude of said conical portion being substantially one-quarter of the diameter of its base.

8. An acoustic device, comprising a tympanum embodying a bodily movable, central conical portion, and an annular rim which encircles said conical portion and which is rigidly supported, said conical portion being freely exposed on all sides to unconfined air and being of sufficient area to produce self-sustaining sound waves in the surrounding air, when vibrated, substantially as described.

In testimony whereof I affix my signature.

Marcus C. Hopkins.

[fol. 7] PLAINTIFF'S EXHIBIT No. 2

[Endorsed]: No. 1726. United States District Court. Lektophone vs. Rola. Plfts. Exhibit No. 2. Filed 5/10/28. Walter B. Maling, Clerk. By A. C. Aurich, Deputy Clerk.

No. 5712. United States Circuit Court of Appeals for the Ninth Circuit. Filed Feb. 5, 1929. Paul P. O'Brien, Clerk.

(Here follow drawings, side folios 8, 9, 10, 11, and 12)

[fol. 13] United States Patent Office

Marcus C. Hopkins, of Jersey City, New Jersey, Assignor, by Mesne Assignments, to Lektophone Corporation, of New York, N. Y., a Corporation of Delaware

Sound-Regenerating Machine

Specification of Letters Patent

1,271,527. Patented July 2, 1918

Application filed July 14, 1913. Serial No. 778,826. Renewed March 22, 1928. Serial No. 224,048

To all whom it may concern:

Be it known that I, Marcus C. Hopkins, a citizen of the United States, residing at No. 2859 Boulevard, Jersey City, county of Hudson, and State of New Jersey, have invented certain new and useful Improvements in Sound-Regenerating Machines; and I do hereby declare the following to be a full, clear, and exact description of the invention, such as will enable others skilled in the art to which it appertains to make and use the same.

This invention relates to instruments which reproduce sounds, such as the talking machine and the phonograph, and is particularly directed to the attainment of a direct propagation in free air from a record of self-sustaining sound waves substantially corresponding to the original recorded sounds in intensity or amplitude as well as in pitch and timbre, as distinguished from an initial generation of violent air disturbances in a confined space, and a subsequent transformation of such disturbances into self-sustaining sound waves by means of the magaphone or trumpet, commonly employed with most existing machines.

The device employed to propagate such regenerated sound waves in air from a record I herein term a "regenerator," and, this device in the phonograph and talking machine comprises the "reproducer" together with the trumpet. The "reproducer" alone is incapable of generating such sound waves in air, and the violent air disturbances which are produced by its diaphragm, and which issue

through its mouth piece, are almost immediately dissipated in heat or in waves, which are not heard at any considerable distance if the horn be removed.

In the case of the "reproducer," all of the energy received from the record issues from its mouth as relatively violent disturbances, which are impressed upon a very small amount of free air, quite incapable of conducting such disturbances without transformation losses, and therefore the trumpet is resorted to to resist transformation into heat and to control the lateral form of the wave during a progressive spreading action, which is accompanied by a lessening of the violence of the disturbances, until a wave front of great area is attained having a movement appropriate to the sound conductivity of air. In this way it has been found practicable to transform a satisfactory part of the energy obtained from a moving record, into self-sustaining sound waves in air, but in every instance this method has been accompanied by distortions of the true recorded sounds in the reproducer, and more particularly in the trumpet, giving rise to those characteristic sounds, known as phonograph and horn sounds. These distortions of the true sounds are in a measure impressed upon the record in its making, but are more noticeable in the reproduction where a suppression of character and overtones, the loss of "timbre" in instruments and the voice, and the accentuation of notes of certain pitch, so change the recorded number that a faithful reproduction is not obtained.

It is an object of the present invention to regenerate the recorded sounds directly from the record, without the interposition of a confined body of air and without the employment of a restrictive transformer, such as a horn.

The "sound regenerator," in the case of the present invention, comprises a tympanum of relatively great area freely exposed to unconfined air, in which the sounds are to be propagated, and a mechanical transmission which faithfully transmits the vibrations produced by the record, to the tympanum, in such manner that the tympanum excites directly in the free air surrounding it sound waves of an intensity or amplitude substantially corresponding to the original recorded sound waves. In other words, the original sounds are directly regenerated by the vibrating

tympanum without the interposition of a restrictive or sound modifying transformer.

The invention consists in providing a tympanum of novel construction, which is capable of responding to the high frequency vibrations employed in the reproduction of sounds, and of imparting these vibrations to a large body of air; in providing a suitable mounting for this tympanum to permit it to exercise its function; and in providing a vibration transmission for receiving the vibratory movement from the record and transmitting this movement to the tympanum, without change of character and appreciable [fol. 14] loss of energy. The invention also comprehends certain combinations of parts and details of construction and location hereinafter particularly described and specifically pointed out in the appended claims.

I have illustrated in the accompanying drawings a sound reproducing machine embodying the several novel features of the invention as they may be employed in regenerating sounds from records made with either laterally or vertically sinuous grooves.

In the drawings,

Figure 1 is a plan view of the machine with the cover raised.

Fig. 2 is a vertical section on line 2—2 of Fig. 1, with cover and transmission arm raised.

Fig. 3 is a vertical section on line 3—3 of Fig. 1 with cover closed.

Fig. 4 is a vertical section on line 2—2 of Fig. 1 with cover closed and transmission arm in playing position.

Fig. 5 is a longitudinal section through the transmission arm on line 5—5 of Fig. 4.

Fig. 6 is a vertical longitudinal section through the transmission arm on line 6—6 of Fig. 5.

Fig. 7 is a vertical section on line 7—7 of Fig. 6.

Fig. 8 is an end view of the transmission arm.

Fig. 9 is a cross-section on line 9—9 of Fig. 5, and

Fig. 10 is a view similar to Fig. 8 of a modified arrangement for vertically sinuous records.

Referring to the drawings, the illustrated machine is mounted within a cabinet having a deck A upon which the motor and sound regenerator are supported. Side walls B downwardly extending from the edges of the deck A are

preferably apertured on all sides and provided with open work grilles C which afford substantially uninterrupted air paths for the sound waves from the interior of the cabinet in all directions laterally to the surrounding atmosphere. In the machine shown the cabinet is bottomless and provided with legs D at its four corners.

The motor may be of any suitable type, that shown having a frame E, spring drums e, winding gear e′, spiral drive gear e″, high pitch spiral table shaft e‴ and governor e⁗. The frame E of the motor is secured against the under side of the deck A depending therefrom and the table shaft projects upwardly through the deck A and carries the circular record table F above the deck. The motor frame E is preferably insulated from the deck A by rubber washers not shown.

The sound regenerator has a right-angled tubular support G, the vertical arm g of which has diametrically opposite conical depressions g′ which are engaged by pointed screws h′ which project inwardly from and are threaded through a ring h of larger internal diameter than the external diameter of the vertical arm g of the right-angled support G. The pointed screws h′ engage the depressions g′ forming a horizontal axis perpendicular to the horizontal arm g″ of the right-angled support G about which axis the arm g″ can swing in a vertical plane, the vertical arm g the while being incline- within the ring h. The ring h comprises the ring h proper and an annular retaining plate h″ screwed upon the lower face of the ring h, an annular groove at the junction of the ring h and plate h″ receiving the inner edge of a holding plate H in such manner that the ring h and the right-angled support G may be turned about a vertical axis in the holding plate H.

The holding plate H is clamped between two rubber or felt rings i, i′, the lower ring i′ resting upon the deck A. A ring I is placed upon the top of the upper ring i and screws i″ have their heads seated in the ring I and are screwed down into the deck A. The ring H and the rubber or felt rings i and i′ have large holes through which the screws i″ pass, so that these screws do not come into contact with the ring H and the right-angled support G is therefore

entirely insulated from the deck A by the rubber or felt rings. The vertical arm g of the right-angled support G extends downwardly through an aperture in the deck A at a point near the periphery of the record table F. A conical spider J shown as having three arms has its hub j fitted to the lower extremity of the vertical arm g of the right-angled support G, and is secured thereon by a set screw j'. To the ends of the arms of the spider J is secured by screws an annulus consisting of two ponderous rings K, K' of metal, these two rings being clamped together by screws k spaced at short intervals. Two of the three arms of the said spider are screwed tightly to the rings K, K' and the third is as tightly secured to said rings but by adjustable screws k', k'' arranged in such manner that the rings K, K' can be secured at varying distances from the foot of this third leg, there being sufficient spring in the spider legs to permit of an adjustment at this point of one-quarter of an inch or so, if desired. It will be seen that owing to the proximity of the mounting of the vertical arm g of the right-angled support G to the edge of the record table F, the spider J and the rings K, K' will underlie the record table and permit of a very compact arrangement of the working parts within the cabinet.

A tympanum L of light vibratile material has an annular plane peripheral portion l, the outer edge of which periph- [fol. 15] eral portion or supporting rim l is tightly gripped and rigidly supported between the ponderous rings K, K', and a central conical portion l' rising from the inner edge of the annular plane peripheral portion. If satisfactory regeneration of sounds from a record is to be had, the whole diameter of the tympanum, that is, the diameter of the aperture in the rings K, K', should exceed nine inches in order that the conditions shall be fulfilled which are required to regenerate the sound waves in the manner above described. The base of the central conical portion l' of the tympanum should exceed in area one-half the effective area of the entire tympanum, that is, the area of the aperture in the rings K, K'; or in other words, the diameter of the base of said conical portion should be at least eight-tenths of the diameter of the circular aperture in the supporting rings K, K'. The altitude of the conical portion l' of the tympanum should be at least one-quarter of the diameter

of its base. It is, of course, possible to make some variation from the approximate sizes given without materially altering the result, but if the tympanum is made as shown in the drawings, any great variation from these proportions will be found to affect the character of the reproduction. It is of vital importance that the tympanum be made of crisp, strong material, having considerable rigidity within itself, and it is also of vital importance that the tympanum as a whole be extremely light and have as little inertia as possible without a weakening effect. The tympanum is shown of conical form with a smooth surface, and this has been found to be very satisfactory. The conical shape is given the tympanum so that shocks or vibrations impressed upon the apex of the cone in a direction toward its base will move the whole cone bodily, the strains being imparted edgewise of the material and no wave motions being set up in the thin material of the cone. The curvature of the walls of the cone preclude the setting up of waves in the material and the intended object, a simultaneous movement of the whole conical portion of the tympanum, is attained. While I prefer to construct the tympanum in the form described and shown with a smooth surface, especially in view of the ease of construction, yet it is possible to form radial corrugations in the conical portion l′ and radial or concentric corrugations in the plane peripheral portion l and produce a light, stiff and very satisfactory article for the purpose. It is possible that when the tympanum is provided with corrugations as just suggested, some variation from the proportions above given may be found possible, and perhaps advisable, but such variations from the proportions given will not be great. The tympanum should preferably be constructed of a colloidal substance and should be from 3 to 20 thousandths of an inch in thickness according to the crispness or stiff character of the material used. Compressed fibrous material, such as hot pressed paper or fiber, has been found to act satisfactorily. It will be noted that the arms of the spider J incline downwardly to correspond with the concial shape of the tympanum L and that the apex of the conical portion of the tympanum is pointed upwardly toward the deck A of the cabinet, and that the concave side of the tympanum is open to the surrounding atmosphere through the open bottom of the cabinet, no obstructions be-

ing presented to the sound waves issuing from the concave surface of the tympanum.

A cap M is secured to the apex of the conical portion l′ of the tympanum L, and this cap should be of more rigid construction than the remainder of the tympanum and should preferably be three-eighths of an inch or more in diameter. I prefer to make the cap M of metal, extremely light but very rigid, and in the form of two cones m, m′ screwed tightly together upon opposite sides of the tympanum and gripping with their edges the material of the conical portion of the tympanum. In order that a tight and positive application of the cones forming the cap M to the conical portion of the tympanum may be had, it is preferable to form the cone m′ of lesser angle than the conical portion of the tympanum, and the cone m of greater angle than the conical portion of the tympanum in which case their edges will securely grip the tympanum material when they are secured together. The cap M is applied to the tympanum to receive the shocks which are to be applied to the tympanum as a whole, and convey them to sufficient of the material of the tympanum to insure the movement of the tympanum as a whole. This will be better understood when it is considered that if the shock were applied to paper or hard rubber at a single small point, the inertia of the tympanum as a whole would be sufficient to resist the attack and the material would be distorted or dented at that point, the effect of the shock upon the tympanum as a whole being entirely lost. The cap M being of hard material such as metal will resist the bending action and distribute the shock to so much of the surface of the material of the tympanum as is capable of successfully resisting the shock, and it will then be transmitted to the tympanum as a whole. The plane peripheral portion l of the tympanum maintains the place of the conical active portion of the tympanum and yields sufficiently to permit of the required motion of the conical portion, resisting, however, displacement of the conical [fol. 16] portion in just that degree necessary to maintain the form and neutral position of the active conical portion. Were the plane peripheral portion l of considerably greater width or markedly narrower than described, its function would be destroyed to a degree corresponding to the remoteness of the departure from the approximate proportion

given and the effective portion of the conical portion of the tympanum would be proportionately lessened.

In the tubular arm g″ of the transmission support G are located two ponderous members or weights N and N′. These members N and N′ are shown as insulated from the wall of the arm g″ by a tube o of insulating material, such as soft rubber or felt. One at least of the ponderous members N and N′ must be movable relatively to the other and therefore it cannot be rigidly secured to the support G, and the insulating material becomes necessary to avoid rattling. I preferably insulate both of the ponderous members or weights N, N′ from the wall of the transmission support G. Pins P projecting from the ponderous member N, and sliding in holes in the other ponderous member N′, act as guides and prevent disalinement and angular displacement of the movable ponderous member. Knife edge fulcra n and n′ are secured in and project from the ends of the ponderous members N and N′, and in the form of the device shown in Figs. 1 to 9 the fulcra n are arranged horizontally and the fulcra n′ are arranged vertically. A lever Q is mounted on the fulcra n′ and is capable of movement upon a vertical axis. A style holder q projects from the lever Q downwardly at an incline so that the point of a style q′ held in the style holder is considerably removed from the axis of the lever Q and movement given the style q′ by the record will effect an oscillation of the lever Q about its vertical axis upon the fulcra n. The lever Q has arms q″ and q‴ projecting from opposite sides thereof, the arm q″ being near the top of the lever Q and the arm q‴ being near the bottom of said lever. The reason for this arrangement of the arms upon the lever will presently appear.

A lever R is mounted upon the fulcra n and oscillates upon a horizontal axis. This lever has arms r and r′ extending upwardly and downwardly from its opposite sides, the arm r projecting from a point near one end of the lever R, and the arms r′ projecting from a point near the other end of the lever R. It will now be seen that a point upon the arm r of the lever R is opposite a similar point on the arm q″ of the lever Q and these two points are connected by rod link S. It will also be seen that a point upon the arm r′ of the lever R is opposite a point upon the arm q‴ of the lever Q and these two points are connected by a rod link S′.

The rod links S and S′ have eye-ends arranged in planes removed 90° from one another, and these eye-ends s are engaged by pivot screws s′ upon the arms of the levers Q and R. A parallelogram is formed by the levers Q and R and the rod links S and S′, and in the form just described, which is adapted for a laterally sinuous groove in the record, oscillation of the lever Q about a vertical axis will produce like oscillations of the lever R about a horizontal axis. Springs T preferably mounted upon the pins P press the ponderous members N and N′ apart forcing the knife edge fulcra n and n′ tightly against the levers R and Q, and put the parallelogram of levers and links under tension, precluding any rattle or looseness of the levers upon the fulcra or of the eye-ends of the links upon their pivot screws, and as the movable ponderous member of the combination is insulated from the transmission support G, no rattle or displacement of the parts can take place when the record groove oscillates the lever Q, but such oscillation will be faithfully transmitted to the lever R. The ponderous members N and N′ have clearance holes s″ for the rod links S and S′.

An arm U projects from the central portion of the lever R and to its end is rigidly secured a rod V which extends downwardly through the interior of the arm g of the transmission support G, its lower end being rigidly secured to the cap M of the tympanum. The rod V is nicked or thinned at v close to the arm U of the lever R to permit of a slight springing action which compensates for the very slight angular motion of the arm U when the lever R is oscillated. It will now be seen that the oscillation of the lever R about its horizontal axis imparted to it from the lever Q, will effect an endwise vibration of the rod V which is directly impressed upon the tympanum L. A cap W closes the opening at the angle of the transmission support G and the removal of this cap gives access to the working parts of the rear end of the transmission.

It will be noted that the distance between the point of the style q′ and the axis of the lever Q is greater than the length of the arm U which projects from the center of the lever R and to which the rod V is connected. By reason of this fact, and of the fact that the levers Q and R, and the rod links S, S′ form a parallelogram, the length of vibration of the

tympanum is relatively much less than that of the style, and the tympanum thus offers little resistance to the movement of the style, thereby greatly reducing the wear on the record. To compensate for this small movement of the tympanum, its large area enables it to move a large body of air, so as to obtain sound waves of large volume and great carrying power.

When a vertically sinuous record is employed the lever Q [fol. 17] is mounted to oscillate about a horizontal axis, as shown in Fig. 10, no change in the lever R being required.

Having thus described my invention, what I claim and desire to secure by Letters Patent, is:—

1. In a machine for directly regenerating sound from a record of the same, a vibratile conical tympanum of large area rigidly supported at its periphery and freely exposed to unconfined air, and a mechanical transmission through which the vibrations produced by the record are transmitted to the tympanum, the tympanum being of sufficient area to impart to the surrounding free air, when the tympanum is so vibrated, sound waves substantially corresponding in intensity to the recorded sound waves: substantially as described.

2. In a machine for directly regenerating sound from a record of the same, a vibratile conical tympanum of large area rigidly supported at its periphery and freely exposed to unconfined air, a mechanical transmission through which the vibrations produced by the record are transmitted to the tympanum, the tympanum being of sufficient area to impart to the surrounding free air, when the tympanum is so vibrated, sound waves substantially corresponding in intensity to the recorded sound waves, and an open-work cabinet inclosing the tympanum but affording substantially free access of the surrounding air thereto; substantially as described.

3. In a direct sound regenerating machine, the combination of a record holder, a transmission support mounted to swing over said record holder, and a tympanum carried by said support and extending under said record holder; substantially as described.

4. In a direct sound regenerating machine, the combination with a record holder, of a transmission support mounted to swing about vertical and horizontal axes, said support having an arm extended to move above and across

said record holder and adapted to carry a stylus, the support having a second arm having a free end, and a tympanum carried at the free end of said second arm with its axis at an angle to said first arm; substantially as described.

5. In a sound regenerating machine, a vibration transmission comprising two ponderous members, fulcra carried by said members, an articulate parallelogram having opposite sides mounted on said fulcra and means exerting pressure upon said ponderous members to place said parallelogram under tension; substantially as described.

6. In a sound regenerating machine, a vibration transmission comprising two ponderous members, fulcra carried by said members, an articulate parallelogram of non-extensible links and non-flexible levers, the levers of said parallelogram being mounted on said fulcra, and means exerting pressure upon said ponderous members to place said parallelogram under tension; substantiallly as described.

7. In a machine for directly regenerating sound from a record of the same, a tympanum support having a circular aperture, a light vibratile tympanum of long area having its outer edge rigidly mounted in said support, said tympanum being shaped to provide an annular sustaining rim adjacent said support, and a conical portion springing from the inner edge of said annular rim, a cap of non-vibratile material rigidly secured to the apex of said conical portion of said tympanum, and a mechanical transmission through which the vibrations produced by the record are transmitted to the tympanum, the tympanum being of sufficient area to impart to the surrounding free air, when the tympanum is so vibrated, sound waves substantially corresponding in intensity to the recorded sound waves; substantially as described.

8. In a machine for directly regenerating sound from a record of the same, a ponderous tympanum support having a circular aperture, a light tympanum of long area having its outer edge rigidly mounted upon said support in said aperture, said tympanum having a central conical portion, the base of which exceeds in area one half the effective area of the said tympanum and a mechanical transmission through which the vibrations produced by the record are transmitted to the tympanum, the tympanum being of sufficient area to impart to the surrounding free air, when the

tympanum is so vibrated, sound waves substantially corresponding in intensity to the recorded sound waves; substantially as described.

9. In a machine for directly regenerating sound from a record of the same, a ponderous tympanum support having a circular aperture, a light vibratile tympanum exceeding nine inches in diameter, having its outer edge rigidly mounted on said support, said tympanum being shaped to provide an annular rim adjacent said support, and a conical portion springing from the inner edge of said annular rim, a cap of non-vibratile material rigidly secured to the apex of said conical portion of said tympanum, and a mechanical transmission through which the vibrations produced by the record are transmitted to the tympanum, whereby the tympanum imparts to the surrounding free air sound waves substantially corresponding in intensity to the recorded sound waves; substantially as described.

10. In a machine for directly regenerating sound from a record of the same, a ponderous tympanum support having [fol. 18] a circular aperture exceeding nine inches in diameter, a light vibratile tympanum mounted in said aperture and having its outer edge rigidly secured upon said support, said tympanum being shaped to provide an annular rim adjacent said support, and a conical portion springing from the inner edge of said annular rim, the diameter of the base of said conical portion being not less than eight-tenths of the diameter of the said circular aperture in said support, a cap of non-vibratile material rigidly secured to the apex of said conical portion of said tympanum, and a mechanical transmission through which the vibrations produced by the record are transmitted to the tympanum, the tympanum being of sufficient area to impart to the surrounding free air, when the tympanum is so vibrated, sound waves substantially corresponding in intensity to the recorded sound waves; substantially as described.

11. In a machine for directly regenerating sound from a record of the same, a ponderous tympanum support having a circular aperture, a light vibratile tympanum of long area mounted in said aperture, and having its outer edge rigidly secured to said support, said tympanum being shaped to provide an annular rim adjacent said support, the outer diameter of said rim exceeding nine inches, and a conical portion springing from the inner edge of said annular rim, the

altitude of said conical portion being substantially one fourth of the diameter of its base, a cap of non-vibratile material rigidly secured to the apex of said conical portion of said tympanum, and a mechanical transmission through which the vibrations produced by the record are transmitted to the tympanum, the tympanum being of sufficient area to impart to the surrounding free air, when the tympanum is so vibrated, sound waves substantially corresponding in intensity to the recorded sound waves; substantially as described.

12. In a machine for directly regenerating sound from a record of the same, a ponderous tympanum support having a circular aperture exceeding nine inches in diameter, a light vibratile tympanum mounted in said aperture and having its outer edge rigidly secured to said support, said tympanum being shaped to provide an annular rim adjacent said support, and a conical portion springing from the inner edge of said annular rim, the diameter of the base of said conical portion being not less than eight-tenths of the diameter of said circular aperture in said support, and the altitude of said conical portion being substantially one quarter of the diameter of its base, a cap of non-vibratile material rigidly secured to the apex of said conical portion of said tympanum, and a mechanical transmission through which the vibrations produced by the record are transmitted to the tympanum, whereby the tympanum imparts to the surrounding free air sound waves substantially corresponding in intensity to the recorded sound waves; substantially as described.

13. In a sound regenerating machine, a vibration transmission comprising two ponderous members, fulcra carried by said members, an articulate parallelogram of links and levers, the levers of said parallelogram mounted upon said fulcra, pressure exerting means acting between said members and tending through said fulcra to hold said parallelogram under tension, and a style holder carried by one of said levers; substantially as described.

14. In a sound regenerating machine, a vibration transmission comprising two ponderous members, guides for maintaining the relative positions of said members, fulcra carried by said members, an articulate parallelogram of

links and levers, the levers of said parallelogram mounted upon said fulcra, pressure exerting means acting between said members and tending through said fulcra to hold said parallelogram under tension, and a style holder carried by one of said levers; substantially as described.

15. In a sound regenerating machine, a vibration transmission comprising two ponderous members, guides for maintaining the relative positions of said members, fulcra carried by said members, an articulate parallelogram of links and levers, the levers of said parallelogram mounted upon said fulcra, pressure exerting means acting between said members and tending through said fulcra to hold said parallelogram under tension, and a style holder carried by one of said levers; substantially as described.

16. In a sound regenerating machine, a vibration transmission comprising two ponderous members, a vertical fulcrum on one of said members, a horizontal fulcrum on the other of said members, an articulate parallelogram of links and levers, the levers of said parallelogram mounted upon said fulcra, and pressure exerting means acting between said members and tending through said fulcra to hold said parallelogram under tension; substantially as described.

17. In a sound regenerating machine, a vibration transmission comprising two ponderous members, fulcra carried by said members, an articulate parallelogram of links and levers, the levers of said parallelogram mounted upon said fulcra, pressure exerting means acting between said members and tending through said fulcra to hold said parallelogram under tension, a style-holder carried by one of said levers, a direct sound regenerating tympanum connected to another of said levers and a pivoted support for said transmission and said tympanum; substantially as described.

[fol. 19] 18. In a sound regenerating machine, a vibration transmission comprising a support, two ponderous members carried by said support, one of said members being movable upon said support, insulating material between said movable member and said support, fulcra carried by said members, an articulate parallelogram of links and levers, said levers being mounted on said fulcra and pressure exerting means acting between said members and tending

through said fulcra to hold said parallelogram under tension; substantially as described.

19. In a direct sound regenerating machine, the combination of a bottomless cabinet having apertures on all sides and a horizontal partition therein, a record holder mounted upon and above said partition, a motor for driving said record holder, a right angled transmission support mounted to swing upon horizontal and vertical axis upon said partition adjacent the periphery of said record holder, one arm of said support adapted to be swung over said record holder, and the other arm of said support extending downwardly through said partition, a vibration transmission mounted within and insulated from said transmission support and comprising two ponderous members carrying fulcra, a parallelogram of links and levers, said levers mounted upon said fulcra, pressure exerting means acting between said members and tending through said fulcra to hold said parallelogram under tension, a style-holder carried by one of said levers at the outer end of said transmission support, a spider mounted upon said transmission support below said partition, a ponderous tympanum support carried by said spider, a direct sound regenerating tympanum mounted upon said ponderous tympanum support, said tympanum being of light vibratile material and having a conical form throughout the greater part of its area and a positive connection between the apex of the conical portion of said tympanum and the inner end of the parallelogram of the said vibration transmission; substantially as described.

20. In a sound regenerating machine, a tympanum, a vibration transmission tensioned in the direction of its vibration independently of the tympanum and connected therewith, and a style holder connected with said transmission.

21. In a sound regenerating machine, an untensioned tympanum, a vibration transmission tensioned in the direction of its vibration and connected with said tympanum, and a style holder connected with said transmission.

22. In a sound regenerating machine, a tympanum, an oscillatory transmission member connected therewith, a style holder for oscillating the transmission member, and means independent of the tympanum for tensioning the

transmission member in the direction of its oscillatory movement.

23. In a sound regenerating machine, a tympanum, an oscillatory transmission member connected therewith, a style holder for oscillating said member, and means independent of the tympanum for yieldingly imparting a tension to said member in the direction of its oscillatory movement.

24. In a sound regenerating machine, an untensioned tympanum, a transmission member connected therewith and adapted for oscillation, a style holder for oscillating said member, and means for imparting a tension to said member in the direction of its oscillatory movement.

25. In a sound regenerating machine, a style holder, a tympanum having a rigid vibratory portion, and a tensioned transmission connecting the style holder with said rigid portion, the tension of said transmission being in the direction of its vibration and independent of the tympanum.

26. In a sound regenerating machine, a style, a tympanum, and tensioned transmission means connecting the style and tympanum and having means for imparting vibrations to the tympanum having no greater length than the vibrations of the style, the tension of said transmission being in the direction of its vibrations and independent of the tympanum.

27. In a sound regenerating machine, a tympanum having a vibratile area of sufficient size to effect, without amplification, the regeneration from a record of sound waves of relatively large volume and carrying power, and tensioned vibration transmitting means connected to the tympanum and adapted to be actuated by a style, the tension of the transmission being in the direction of its vibration and not extending to the tympanum.

28. In a sound regenerating machine, a tensioned vibration transmission, a styleholder upon one end of said transmission and an untensioned tympanum connected with the opposite end of said transmission, the tension of the transmission being in the direction of its vibration; substantially as described.

29. In a sound-regenerating machine, a vibratile conical tympanum of large area rigidly supported at its periphery and freely exposed to unconfined air; a sound-vibrated element, and vibration transmission means connecting said element and said tympanum and arranged to impart to the tympanum vibrations which are relatively much shorter than the vibrations imparted to the said element.

30. In a sound-regenerating machine, a vibratile conical tympanum rigidly supported at its periphery and freely ex- [fol. 20] posed to unconfined air, a sound-vibrated element, and vibration transmission means connecting said element and said tympanum arranged to impart to the tympanum vibrations which are relatively much shorter than the vibrations imparted to the said element; the tympanum having an area sufficiently large to effect, without amplification, sound waves of large volume and carrying power.

31. In a sound-regenerating machine, a vibratile conical tympanum of large area, rigidly supported at its periphery and freely exposed to unconfined air, a sound-vibrated element, and tensioned transmission means connecting said element and said tympanum and arranged to impart to the tympanum vibrations which are relatively much shorter than the vibrations imparted to the record end of the style.

In testimony whereof I affix my signature, in presence of two witnesses.

Marcus C. Hopkins.

Witnesses: M. A. Bill, Leon W. Rosenthal.

Corrections in Letters Patent No. 1,271,527

It is hereby certified that in Letters Patent No. 1,271,527, granted July 2, 1918, upon the application of Marcus C. Hopkins, of Jersey City, New Jersey, for an improvement in "Sound-Regenerating Machines," errors appear in the printed specification requiring correction as follows: Page 1, line 25, for the word "magaphone" read megaphone; page 5, lines 75 and 95, claims 7 and 8, and page 6, line 25, claim 11, for the word "long" read large; and that the said Letters Patent should be read with these corrections therein

PLAINTIFF'S EXHIBIT No. 4.

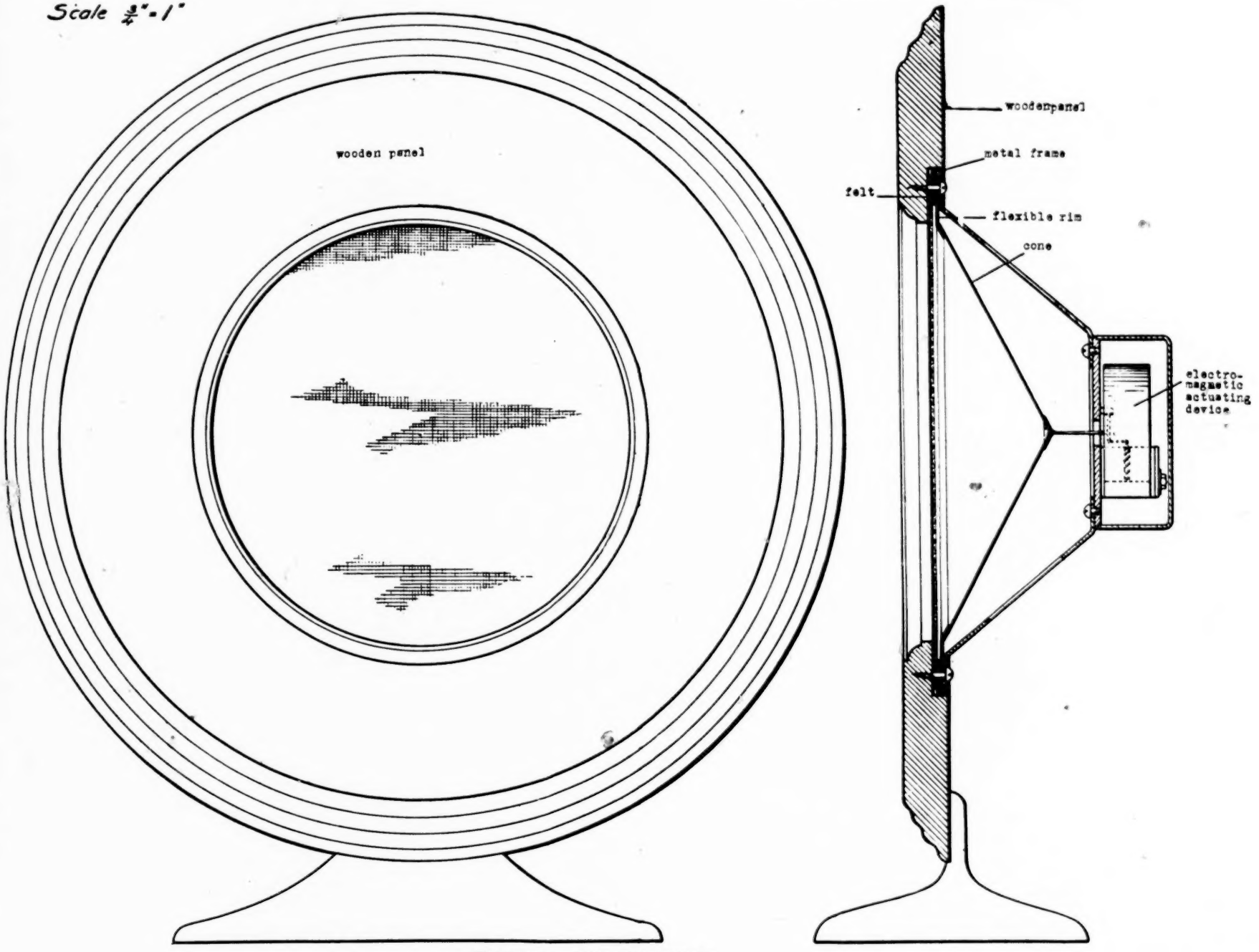

ROLA SPEAKER

Front view and sectional view of complete speaker

[Endorsed]: No. 1726. United States District Court. Lektophone vs. Rola. Plfts. Exhibit No. 4. Filed 5/10/28. Walter B. Maling, Clerk. By A. C. Aurich, Deputy Clerk.

No. 5712. United States Circuit Court of Appeals for the Ninth Circuit. Filed Feb. 5, 1929. Paul P. O'Brien, Clerk.

Scale $\frac{3}{4}$" - 1"

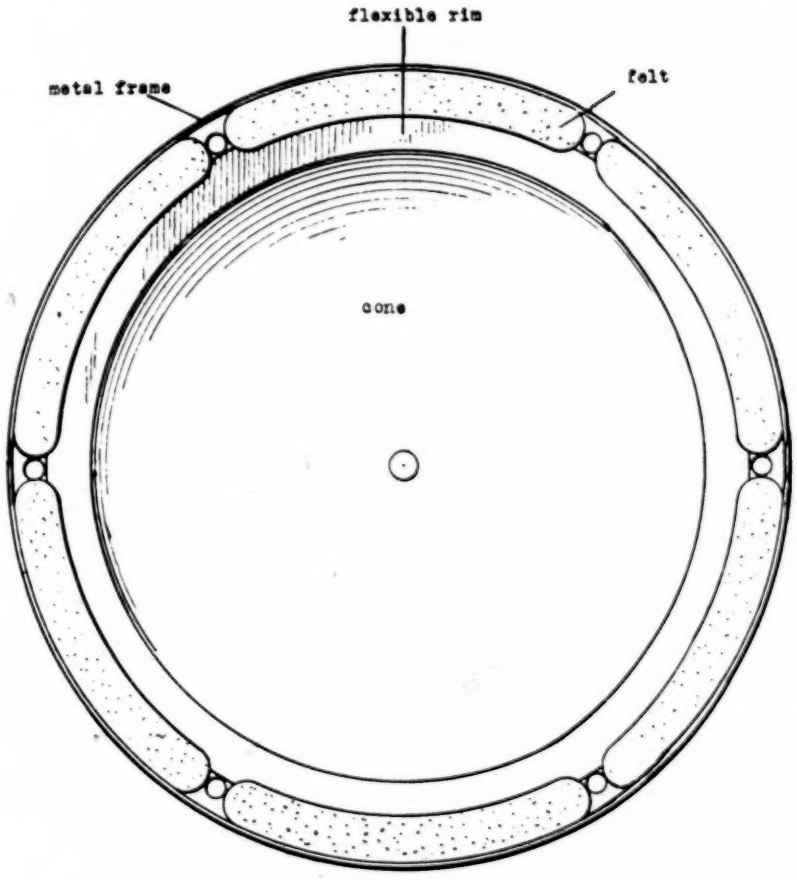

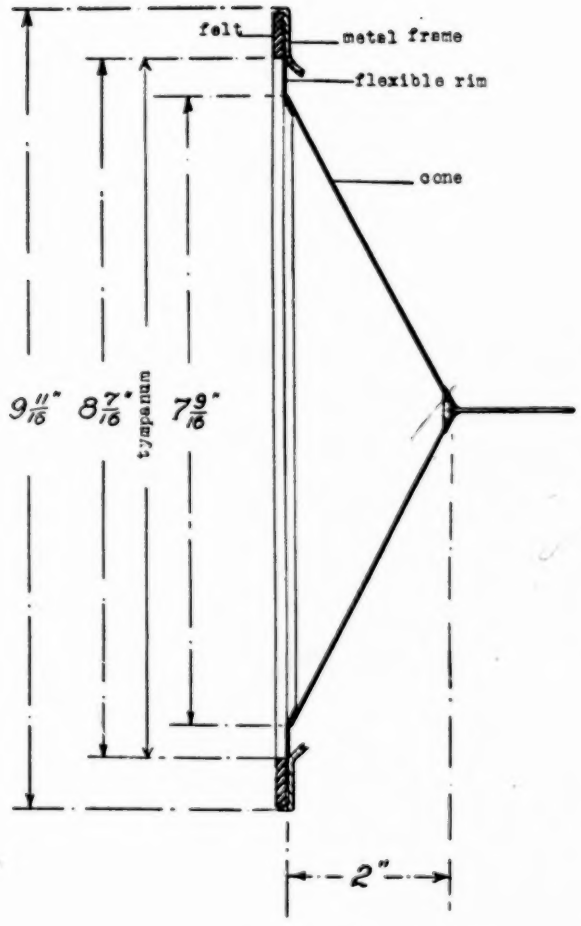

Area of tympanum = 55.95 sq. in.
Area of base of cone = 44.90 sq in.

ROLA SPEAKER

Front view and sectional view of tympanum and portion of supporting frame.

that the same may conform to the record of the case in the Patent Office.

Signed and sealed this 28th day of September, A. D., 1920.

M. H. Coulston, Acting Commissioner of Patents.

(Seal.)

Cl. 274—16.

(Here follow drawings, side folios 21 & 22, 23 & 24)

[fol. 25] PLAINTIFF'S EXHIBIT No. 5

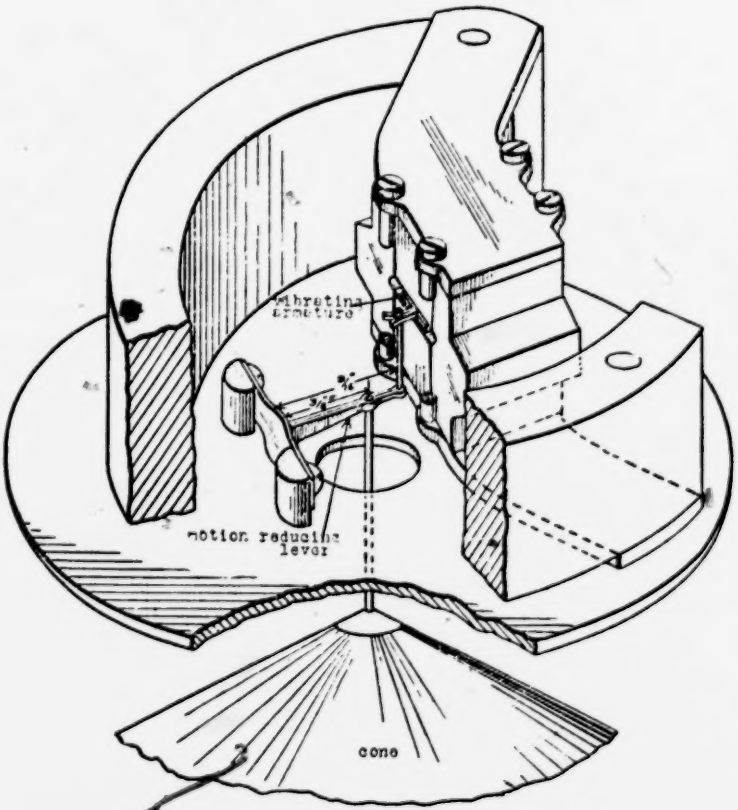

PERSPECTIVE VIEW OF ELECTRO-MAGNETIC ACTUATING DEVICE OF ROLA SPEAKER SHOWING LEVER MECHANISM FROM ARMATURE TO CONE.

[Endorsed:] No. 1726. United States District Court. Lektophone vs. Rola. Plft's. Exhibit No. 5. Filed 5/10/28.

Walter B. Maling, Clerk. By A. C. Aurich, Deputy Clerk.

No. 5712. United States Circuit Court of Appeals for the Ninth Circuit. Filed Feb. 5, 1929. Paul P. O'Brien, Clerk.

[fol. 26] PLAINTIFF'S EXHIBIT NO. 6

2—390

Department of Commerce, Patent Office

To all persons to whom these presents shall come, Greeting:

This is to certify that the annexed is a true copy from the records of this office of the File Wrapper, Contents and Drawing, in the matter of the Letters Patent of Marcus C. Hopkins, Assignor by Mesne Assignments to Lektophone Corporation, Number 1,271,529, Granted July 2, 1918, for Improvement in Acoustic Devices.

In testimony whereof I have hereunto set my hand and caused the seal of the Patent Office to be affixed, at the City of Washington, this Fourteenth day of November, in the year of our Lord, one thousand nine hundred and twenty-five and of the Independence of the United States of America the one hundred and fiftieth.

Thomas E. Robertson, Commissioner of Patents.

Attest: D. E. Wilson, Chief of Division. (Seal.)

[fol. 27] 1918. WB.

Number (Series of 1915), (Ex'r's Book) 108 76.
229,014

Div. 23. Patent No. 1271529.

Name: Marcus C. Hopkins, Assor. by mesne Assigts. to Lektophone Corporation of New York, N. Y., a Corp. of Delaware.

Of New York.

County of ——,

State of New York.

Invention: Acoustic Devices.

	Original	Renewed	
Parts of application filed	Petition—	April 12, 1918	, 191-
	Affidavit—	" " , 1918	, 191-
	Specification—	" " , 1918	, 191-
	Drawing—	" " , 1918	, 191-
	Photo Copy—	, 1918	, 191-
	First Fee Cash $15	Apr. 17, 1918	, 191-
	" " Cert.	, 191-	, 191-
	Appl. filed complete—	April 17, 1918	, 191-

Examined and Passed for Issue,
Apr. 22, 1918 , 191-
W. D. Groesbeck, Exr. Div. 23 Exr. Div.
Notice of Allowance April 29, 1918 , 191-
By Commissioner.
Final Fee Cash $20 June 3, 1918 , 191-
" " Cert. , 191- , 191-
Patented July 2, 191-
Attorneys, Pennie, Davis, Marvin & Edmonds, 35 Nassau St., New York, N. Y.
Associate Attorney

[On left margin:] 7158—July 14, 1913. Division of App., No. Renewal #224048, filed renewed Mar. 22, 1918.
[fol. 28] (No. of Claims Allowed—8.) Print Claims—1-4 in O. G. (Cl. 181-31.)
Title as Allowed—Acoustic Devices.
2—7

Department of the Interior, United States Patent Office, Washington

Div. 23

$15—Recd. Apr. 17, 1918. C. C. U. S. Pat. Office.

The Commissioner of Patents:

Sir: Please apply filing fee of $15 herewith application of Marcus C. Hopkins, Sound Regenerating Machines—Filed Apr. 12/18.

Pennie, Davis, Marvin & Edmonds.

11—520

(Give full address:) 35 Nassau St., New York.
Cost: $——.
Received: $——.
Delivered: —— —, 191-.

229014—1

11860

Mail Room, Apr. 12, 1918, U. S. Patent Office

PETITION

To the Commissioner of Patents:

Your petitioner, Marcus C. Hopkins, a citizen of the [fol. 29] United States, residing in the borough of Manhattan, city, county and State of New York, whose Post Office address is No. 35 Nassau Street, New York City, N. Y., prays that Letters Patent may be granted to him for improvements in acoustic devices, as set forth in the annexed specification.

And he hereby appoints John C. Pennie, William H. Davis, Arba B. Marvin and Dean S. Edmonds (constituting the firm of Pennie, Davis, Marvin & Edmonds, 35 Nassau Street, New York, Registration No. 10839), and each of them, his Attorneys, with full power of substitution and revocation, to prosecute this application, to make alterations and amendments therein, to sign the drawings, to receive the patent, and to transact all business in the Patent Office connected therewith.

Marcus C. Hopkins.

SPECIFICATION

To all whom it may concern:

Be it known that I, Marcus C. Hopkins, a citizen of the United States, residing in the borough of Manhattan, city, county, and State of New York, have invented certain new and useful Improvements in Acoustic Devices; and I do hereby declare the following to be a full, clear, and exact description of the invention, such as will enable others

skilled in the art to which it appertains to make and use the same.

229014—2

[fol. 30] 11861

This invention relates to instruments which reproduce sounds; and is particularly directed to the attainment of a direct propagation, in free air, from a record or equivalent element subjected to the action of the original sound waves or vibrations, of self-sustaining sound waves substantially corresponding in intensity and amplitude, as well as in pitch or timbre, to the said original sound waves, as distinguished from an initial generation of violent air disturbances in a confined space, and a subsequent transformation of such disturbance into self-sustaining sound waves by means of a megaphone, horn or other amplifier.

In the case of a talking machine, the device employed to propagate the regenerated sound waves in air comprises the reproducer or sound-box and the horn; but the reproducer alone is incapable of propagating sound waves of the character above stated because of the fact that the air disturbances which are produced by its diaphragm and which issue through its mouth-piece are almost immediately dissipated in heat or in waves which are not heard at any considerable distance if the horn be removed. Consequently, it is usual in all instruments of the class indicated to employ an amplifier of some sort to resist transformation into heat and to control the lateral form of the wave during a progressive spreading action which is accompanied by a lessening of the violence of the disturbance until a wave front of great area is attained having a movement appropriate to the sound conductivity of air. In this [fol. 31] way, it has been found practicable to transform a satisfactory part of the energy, obtained from a moving record, into self-sustaining

1 229014—3

11862

sound waves in air; but in every instance such method has been accompanied by distortions of the true recorded sounds in the reproducer, and more patricularly in the

horn or amplifier, giving rise to those characteristic sounds known as phonograph and horn sounds. These distortions of the true sounds are in a measure impressed upon the record in its making, but are more noticeable in the reproduction, where a suppression of character and overtones, the loss of timbre in instruments and the voice, and the accentuation of notes of certain pitch, so change the recorded number that a faithful reproduction is not obtained.

It is the object of the present invention to regenerate the original sounds directly from the record or other element subjected to the action of such sounds, without interposition of a confined body of air and without the employment of a restrictive transformer, such as a horn. According to the invention, the sound regenerator comprises a tympanum of relatively great area freely exposed to unconfined air, in which the sounds are to be propagated; the vibrations produced by the record or its equivalent,—that is, the element on which the original sounds or sound waves are recorded, or which is otherwise subjected to the vibrating action of said sounds or sound waves and may, therefore, be termed the "sound-vibrated" element—being faith- [fol. 32] fully transmitted to the tympanum in such manner that the latter excites directly in the free air surrounding it, sound waves of an intensity and amplitude substantially corresponding to the original sound waves. In other words, the original sounds are directly regenerated by the vibrating tympanum without the interposition of a restrictive or sound-modifying transformer.

The invention consists, briefly, in the provision of a tympanum of novel construction, which is capable of responding to the high frequency vibrations employed in the reproduction of sounds, and of imparting these vibrations to a large body of air; and it is to be considered as a division of the invention shown and described in my prior application, renewed March 22, 1918, No. 224,048.

The accompanying drawing illustrates the improved tympanum incorporated in a sound-reproducing machine of the kind disclosed in said application, the single figure being a

vertical sectional view taken transversely through the machine. Reference may be had to this application for a disclosure of the complete machine; and in order to facilitate and understanding of the present invention as compared with such disclosure, the same reference characters will be employed as in the said earlier application to indicate corresponding parts.

The machine represented in said drawing is mounted within a cabinet having a deck A, upon which the motor [fol. 33] (not shown) and the sound regenerator are mounted. Side walls B extend downwardly from the edges of the deck A, and are preferably apertured on all sides and provided with open-work grills C, which afford substantially uninterrupted air paths for the sound waves from the interior of the cabinet in all directions laterally to the surrounding atmosphere. In the machine shown, the cabinet is bottomless and provided with legs D at its four corners. The motor may be of any suitable type, and is connected to drive the shaft of the turn-table F through the intermediary of gearing, as is usual, said shaft projecting up-

wardly through the deck A. The turn-table carries the record F', which in this instance is the element directly acted upon by the original sound vibrations which are to be subsequently regenerated or reproduced; that is to say, the record, in the present construction, is the "sound-vibrated" element.

The sound regenerator has a right-angled tubular support G, the vertical arm *g* of which is engaged at diametrically—opposite points by bearing screws *h'*, which project inwardly from and are carried by a ring *h* of larger diameter than the said arm *g*, as described in said prior application. The screws *h'* form a horizontal axis perpendicular to the horizontal arm *g''* of the right-angled support G, about which axis the arm *g''* can swirng in a vertical plane, the vertical arm *g* the while being inclined within the ring *h*. The latter forms part of an annular bearing device se- [fol. 34] cured upon the deck A, the open central portion of which device alines with an opening of larger diameter

in said deck, and the said vertical arm g of the support G extends downwardly through these openings and has its lower extremity fitted in the hub j of a conical spider J and fastened to the same by a set screw j'.

The spider J in the present construction has three arms, only two of which appear, however; and to the lower ends of these arms there is secured by screws an annulus consisting of two ponderous rings K, K′ of metal, which are clamped together by screws k spaced at short intervals. Two of the three arms of the said spider are screwed tightly to the rings K, K′, and the third is so arranged that the

rings K, K′ can be secured at varying distances from the foot of this third arm, there being sufficient spring in the spider arms to permit of an adjustment at this point of one-quarter of an inch or so, if desired. This detail is illustrated in my earlier case, and for that reason is not represented in the present case.

The tympanum L, which forms the subject of the present case, is constructed of light, vibratile material and has an annular plane peripheral portion or supporting rim l, the outer edge of which is tightly gripped and rigidly supported between the rings K, K′, and a central conical portion l' rising from the inner edge of the said rim l. If satisfactory regeneration of sounds from a record or other sound-vibrated element is to be had, the whole diameter of the [fol. 35] tympanum, that is, the diameter of the aperture in the rings K, K′ should exceed nine inches in order that the conditions required to regenerate the sound waves in the manner above described shall be fulfilled. The base of the central conical portion l' should exceed in area one-half of the effective area of the entire tympanum, that is, the area of the aperture in the rings K, K′; or in other words, the diameter of the base of said conical portion should be at least eight-tenths of the diameter of the said aperture. The altitude of the conical portion l' should be at least one-quarter of the diameter of its base.

It is, of course, possible to make some variation from the approximate sizes given without materially altering the result; but if the tympanum is constructed as shown in the drawing, any great variation from these proportions will be found to affect the character of the reproduction. It is

of vital importance that the tympanum be made of crisp, strong material, having considerable rigidity within itself, and it is also of vital importance that the tympanum as a whole be extremely light and have as little inertia as possible without a weakening effect. The tympanum is shown of conical form with a smooth surface, and this has been found to be very satisfactory. The conical shape is given the tympanum so that shocks or vibrations impressed upon the apex of the cone in a direction towards its base will [fol. 36] move the whole cone bodily, the strains being imparted edgewise of the material and no wave motions being set up in the thin material of the cone. The curvature of the walls of the cone precludes the setting up of waves in the material; and the intended object, a simultaneous movement of the whole conical portion of the tympanum, thus
is/attained. While I prefer to construct the tympanum in the form described and shown with a smooth surface, especially in view of the ease of construction, yet it is possible to form radial or concentric corrugations in the plane peripheral portion *l* and produce a light, stiff and very satisfactory article for the purpose. It is conceivable, too, that when the tympanum is provided with corrugations as just suggested, some variation from the proportions above given may be made; but such variations will not be great. The tympanum should preferably be constructed of a collodial substance, and should be from 3 to 20 thousandths of an nich in thickness according to the crispness or stiff character of the material used. Compressed fibrous material, such as hot pressed paper or fibre, has been found to act satisfactorily.

It will be noted that in the construction illustrated, the

arms of the spider J incline downwardly to correspond with the conical shape of the tympanum L, the apex of the conical portion of the tympanum pointing upwardly toward the deck A of the cabinet, and, also, that the concave side of the said tympanum is open to the surrounding atmosphere [fol. 37] through the open bottom of the cabinet, no obstructions being presented to the sound waves issuing from the concave surface of the tympanum.

A cap M is secured to the apex of the conical portion l of the tympanum, and this cap should be of more rigid construction than the remainder of the tympanum and should preferably be three-eights of an inch or more in diameter. I prefer to make the cap M of metal, extremely light but very rigid, and in the form of two cones m, m′ screwed tightly together upon opposite sides of the tympanum so as to grip the material thereof with their edges. In order that a tight and positive application of the cones forming the cap M to the conical portion of the tympanum may be had, it is preferable to form the inner cone m′, of lesser angle, and the outer cone m of greater angle than the said conical portion, in which case their edges will securely grip the tympanum material when they are fastened together.

The vibrations or sound waves originally imparted to the record or its equivalent may be transmitted therefrom to the tympanum to vibrate the same in the manner and by means of the mechanism shown and described in my aforesaid application above identified, or by means of some other approved transmission means or mechanism, as will be understood. In any event, such means or mechanism forms no part of the present case, however, and for that

[fol. 38] reason requires no extended dliselosure. It is believed sufficient to state, therefore, that in the arrangement illustrated the mechanism in question is located within the horizontal arm g″ of the support G, and is connected at its

forward end with the stylus holder q, the other end of said mechanism having connected to it a vertical rod V, which extends downwardly through the interior of the vertical arm g of the support and is rigidly secured to the cap M of the tympanum. In consequence, the vibrations of the stylus q′ mounted in said holder and produced in the usual way by the phonic lines on the record, will be transmitted from the stylus through the transmission mechanism to the rod V, which will be vibrated endwise, the endwise vibrations of said rod being directly impressed upon the tympanum L.

11869

I claim:

1. An acoustic device, comprising a tympanum rigidly supported at its periphery and having a free area exceeding nine inches in diameter and a conical portion A^1. $\wedge$ [substantially]* eight-tenths of the diameter of A^1 said free area.

2. An acoustic device, comprising a tympanum rigidly supported at its periphery and having a free area exceeding nine inches in diameter and a conical " portion $\underset{A^1}{\wedge}$ [substantially]* eight-tenths of the diameter of said free area, said conical portion being rigid in the direction of the axis of the tympanum.

[fol. 39] 3. An acoustic device, comprising a tympanum rigidly supported at its periphery and having a free area exceeding nine inches in diameter and a " conical portion $\underset{A^1}{\wedge}$ [substantially]* eight-tenths of the diameter of said free area, the altitude of said conical portion being substantially one-quarter of the diameter of its base.

4. An acoustic device, comprising a tympanum support having a circular aperture, and a light tympanum freely exposed to unconfined air and having its outer edge rigidly mounted on said support in said aperture; said tympanum

[*Words and figures enclosed in brackets erased in copy.]

having a central conical portion, the base of which exceeds in area one-half the effective area of the said tympanum; the tympanum being of sufficient area to impart to the surrounding free air, when vibrated, sound waves substantially corresponding in intensity to the original sound waves.

5. An acoustic device, comprising a tympanum support having a circular aperture, and a light vibratile tympanum exceeding nine inches in diameter, having its outer edge

rigidly mounted on said support; said tympanum being shaped to provide an annular rim adjacent said support, and a conical portion springing from the inner edge of said annular rim, the diameter of the base of said conical portion being not less than eight-tenths of the said circular aperture in said support.

[fol. 40] 6. An acoustic device, comprising a tympanum support having a circular aperture, and a light vibratile tympanum

2308. ∧ [diaphragm]* mounted in said aperture and having its outer edge secured to said support; said tympanum being shaped to provide an annular rim, the outer

A. [inner]* ∧ diameter of which exceeds nine inches, and a conical portion springing from the inner edge of said annular rim, the altitude of said conical portion being substantially one-fourth of the diameter of its base.

7. An acoustic device, comprising a tympanum support having a circular aperture exceeding nine inches in diameter, and a light vibratile tympanum mounted in said aperture and having its outer edge rigidly secured to said support; said tympanum being shaped to provide an annular rim adjacent said support, and a conical portion springing from the inner edge of said annular rim, the diameter of the base of said conical portion being not less than eight-tenths of the diameter of said circular aperture, and the altitude of said conical portion being substantially one-quarter of the diameter of its base.

[*Words and figures enclosed in brackets erased in copy.]

Insert B'. Per A

[Cl. 8]

8. An acoustic device, comprising a tympanum of colloidal material rigidly supported at its periphery and having a free area exceeding nine inches in diameter and a conical portion substantially eight-tenths of the diameter of said

[fol. 41] free area, the altitude of said conical portion being substantially one-quarter of the diameter of its base.

9. An acoustic device, comprising a tympanum of compressed fibrous material rigidly supported at its periphery and having a free area exceeding nine inches in diameter and a conical portion substantially eight-tenths of the diameter of said free area, the altitude of said conical portion being substantially one-quarter of the diameter of its base.

10. An acoustic device, comprising a tympanum of compressed fibrous material rigidly supported at its periphery and having a free area exceeding nine inches in diameter and a conical portion substantially eight-tenths of the diameter of said free area.

11. An acoustic device, comprising a tympanum freely exposed to unconfined air and comprising a conical portion of compressed fibrous material, upon the apex of which portion shocks or vibrations are adapted to be impressed in a direction such that said shocks or vibrations will move the entire conical portion bodily.

12. An acoustic device, comprising a tympanum freely exposed to unconfined air and comprising a conical portion upon the apex of which shocks or vibrations are adapted to be impressed in a direction such that said shocks or vibrations will move the entire conical portion bodily; said coni-

cal portion being of sufficient area to impart to the surrounding free air, when vibrated, sound waves substan-

229014—13

11872

[fol. 42] tially corresponding in intensity to the generating (original) shocks or vibrations.

13. An acoustic device, comprising a tympanum freely exposed to unconfined air and comprising a conical portion of compressed fibrous material, upon the apex of which portion shocks or vibrations are adapted to be impressed in a direction such that said shocks or vibrations will move the entire conical portion bodily; the said conical portion being of sufficient area to impart to the surrounding free air, when vibrated, sound waves substantially corresponding in intensity to the original shocks or vibrations.

[Matter enclosed between rules erased in copy.]

229014—14

11873

In testimony whereof I affix my signature.

Marcus C. Hopkins.

OATH

COUNTY OF NEW YORK,
State of New York, ss:

Marcus C. Hopkins, the above named petitioner, being duly sworn, deposes and says, that he is a citizen of the United States and a resident of the borough of Manhattan, City, County and State of New York; that he verily believes himself to be the original, first and sole inventor of the improvements in acoustic devices described and claimed in the annexed specification, which is a division of his former application for United States Letters Patent, Serial Number [fol. 43] 778,826, filed July 14, 1913; that he does not know and does not believe that the same was ever known or used before his invention or discovery thereof, or patented or described in any printed publication in any country before

his invention or discovery thereof, or more than two years prior to his said application, or in public use or on sale in the United States for more than two years prior to his said application; that said invention has not been patented in any country foreign to the United States on an application filed by him or his legal representatives or assigns more than twelve months prior to the said application; and that no application for patent on said improvement has been filed by him, or his representatives or assigns in any country foreign to the United States, except as follows:

Austria, filed July 14, 1914, Ser. No. A. 6151;

Belgium, filed July 14, 1914, Ser. No. 220,014; Patented July 14, 1914, No. 269,216;

Canada, filed July 28, 1915, Ser. No. 196,573; Patented April 25, 1916, No. 169,043;

Denmark, filed July 13, 1914, Ser. No. 1,228; Patented January 25, 1916, No. 20,972;

229014—15

11874

France, filed July 13, 1914, Ser. No. 72,606, Patented July 13, 1914, No. 475,109;

Germany, filed July 14, 1914, Ser. No. D 31161, Patented July 15, 1914, No. 286,137;

Great Britain, filed July 11, 1914, Ser. No. 16,602, patented July 14, 1913, No. 16,602;

Holland, filed June 11, 1915, Ser. No. 5,981;

Italy, filed July 15, 1914, Patent No. 144,682;

[fol. 44] Norway, filed July 13, 1914, Ser. No. 6,718, Patent No. 26,721;

Sweden, filed July 11, 1914, Ser. No. 1,937;

Switzerland, filed July 14, 1914, Ser. No. 81,372, Patent No. 71,939.

Marcus C. Hopkins.

Subscribed and sworn to before me, this 6th day of April, 1918. M. A. Bill, Notary Public, Kings Co. Cert. filed N. Y. Co. Notary #255.

229014—16

Div. 23

New York, N. Y., April 11, 1918.

Honorable Commissioner of Patents, Washington, D. C.

SIR: The application to which this communication is attached is filed as a division of a prior application of the same inventor, originally filed July 14, 1913, Serial No. 778,826, renewed March 22, 1918, Serial No. 224,048. The earlier application contains a disclosure of the complete machine or apparatus, whereas on the other hand, the present application is restricted to the diaphragm or tympanum per se. For that reason, the drawings of the earlier application contain many figures which have no bearing on the invention claimed in the present case, and during a discussion with the Examiner in charge of the earlier case, the suggestion was made by him that the divisional case be restricted to a single figure which would show as little as possible of the structure irrelevant to the invention. This course has ac- [fol. 45] cordingly been followed, the single figure of the present case corresponding to the Fig. 4 of the earlier application.

Very respectfully, Pennie, Davis, Marvin and Edmonds, Attorneys for Applicant.

229014—17

In the United States Patent Office

Application of Marcus C. Hopkins. Filed April 17, 1918. Serial No. 229,014. Sound Regenerating Machines

New York, N. Y., April 19, 1918.

Honorable Commissioner of Patents, Washington, D. C.

SIR: Prior to action on the merits of the case, entry of the following amendments is hereby directed:

In lines 3 and 4 of each of Claims, 1, 2 and 3, change, "substantially" to "the diameter of which is not less than"

Claim 6, line 5, change "inner" to "outer."

Cancel Claims 8 to 13, inclusive.

The amendments to Claims 1 to 3, and 6, have been made to render the present case consistent with the disclosure in the parent case, Serial No. 778,826, filed July 14, 1913.

Claims 8 to 13 have been cancelled in order to reduce the number of claims and for the further reason that the [fol. 46] subjects matter thereof are adequately covered in the claims retained.

Very respectfully, Pennie, Davis, Marvin, and Edmonds, Attorneys for Hopkins.

229014—18

2—073

Department of the Interior, United States Patent Office, Washington

June 5, 1918.

Petition. Application of M. C. Hopkins. Serial No. 229,014. Invention: ——.

This petition is referred to the Examiner in charge of Division 23 for recommendation.

In case he recommends adversely he will state his reasons therefor and furnish a copy thereof to petitioner.

J. T. Newton, Commissioner of Patents.

229014—19

[fol. 47]

#7
B11876

Div. 23

In the United States Patent Office

Application of Marcus C. Hopkins. Filed April 17, 1928. Serial No. 229,014. Sound Regenerating Machines. Allowed April 29, 1918

New York City, June 3, 1918.

Hon. Commissioner of Patents, Washington, D. C.

SIR: Entry of the following additional claim is requested under the provisions of Rule 78.

"8. An acoustic device, comprising a tympanum embodying a bodily movable, central conical portion, and an annular rim which encircles said conical portion and which is rigidly supported, said conical portion being freely ex-

P. D. M. & E. B'.

posed on all sides to unconfined air and being of sufficient area to produce self-sustaining sound waves in the surrounding air when vibrated, substantially as described."

Sigs.

Remarks

The above claim-as been submitted informally to both the Principal and Assistant Examiners in charge of the [fol. 48] case, and has been accepted as allowable, no further search being necessary.

Very respectfully, Pennie, Davis, Marvin & Edmonds,
Attorneys for Hopkins.

claim requiring no further search,

The proposed [corrections being merely formal,]* it is recommended that this amendment be entered under Rule 78, without withdrawing the case from issue. The final fee has not been paid.

W. D. Groesbeck, Examiner, Div. 23.

[In margin:] Approved: Jun. 6, 1918. R. P. Whitehead, First Assistant Commissioner.

229014—20

Address only "The Commissioner of Patents, Washington, D. C.," and not any official by name.

All communications respecting this application should give the serial number, date of filing, title of invention, and name of the applicant.

B—T

Department of the Interior, United States Patent Office, Washington

Examiner's Amendment

June 8, 1918.

Pennie, Davis, Marvin & Edmonds, 35 Nassau St., New York, N. Y.:

Please find below a communication from the examiner in charge of the application of Marcus C. Hopkins, for Acous- [fol. 49] tic Devices, Filed April 17, 1918, Serial No. 229,014.

James T. Newton, Commissioner of Patents.

[*Words and figures enclosed in brackets erased in copy.]

In accordance with the provisions of Order No. 2308, dated March 12, 1917, which reads in part as follows:

* * * * * * *

Obvious informalities in the application may be corrected by the examiner, but said correction must be in the form of an amendment, approved by the Principal Examiner in writing, placed in the file, and made a part of the record. The changes specified in the amendment will be entered by the clerk in the regular way.

* * * * * * *

the changes, hereinafter specified, are made by the examiner in the application above identified.

Should these changes not be satisfactory to the applicant, appropriate amendment may be proposed under the provisions of Rule 78, provided the specification has not been printed.

The application has been amended as follows:

Claim 6, line 3; change —diaphragm— to "tympanum."

W. D. Groesbeck, Examiner.

229014—21

[fol. 50] Address only The Commissioner of Patents, Washington, D. C.

LETTER No. 6

G

Department of the Interior, United States Patent Office, Washington

AMENDMENT

In the Matter of the Application of Marcus C. Hopkins. Acoustic Devices. Filed April 17, 1918. Serial No. 229,014

June 7, 1918.

SIR: You are hereby informed that the recommendation of the examiner that the amendment be admitted under the

provisions of Rule 78, has been approved by the First Assistant Commissioner and the amendment entered.

By direction of the Commissioner:

Very respectfully, M. H. Coulston, Chief Clerk. F.

Marcus C. Hopkins, c/o Pennie, Davis, Marvin & Edmonds, 35 Nassau St., New York City.

229014—22

[fol. 51] 2-181

Address only The Commissioner of Patents, Washington, D. C.

Serial No. 229,014

AH

Department of the Interior, United States Patent Office, Washington

Apr. 29, 1918.

Marcus C. Hopkins, Assor.:

SIR: Your application for a patent for an improvement in Acoustic Devices, filed April 17, 1918, has been examined and allowed.

The final fee, Twenty Dollars, must be paid not later than **six months from** the date of this notice of allowance. If the final fee be not paid within that period, the patent on this application will be withheld, unless renewed with an additional fee of $15, under the provisions of Section 4897, Revised Statutes.

The office delivers patents upon the day of their date, and on which their term begins to run. The printing, photolithographing, and engrossing of the several patent parts, preparatory to final signing and sealing, will require about four weeks, and such work will not be undertaken until after payment of the necessary fee.

When you send the final fee you will also send, distinctly and plainly written, the name of the inventor, title of invention, and serial number as above given, date of allow-

[fol. 52] ance (which is the date of this cricular), date of filing, and, if assigned, the names of the assignees,

If you desire to have the patent issue to assignees, an assignment containing a request to that effect, together with the fee for recording the same, must be filed in this office on or before the date of payment of final fee.

After issue of the patent uncertified copies of the drawings and specifications may be purchased at the price of five cents each. The money should accompany the order. Postage stamps will not be received.

Final fees will not be received from other than the applicant, his assignee or attorney, or a party in interest as shown by the records of the Patent Office.

Respectfully, J. T. Newton, [Thomas Ewing,]*
Commissioner of Patents.

Pennie, Davis, Marvin & Edmonds, 35 Nassau Street, New York, N. Y.

229014—23

On left margin: In remitting the final fee give the serial number at the head of this notice.

On right margin: Uncertified checks will not be accepted.

[fol. 53] $20 Rec'd. Jun. 8, 1918. C. C. U. S. Pat. Office.

2-327

4213

MEMORANDUM OF FEE PAID AT UNITED STATES PATENT OFFICE

(Be careful to give correct Serial No.)

June 1, 1918.

Serial No. 229,014.
Inventor: Marcus C. Hopkins.
Patent to be Issued to Lektophone Corporation.
Name of Invention, as Allowed: Acoustic Devices.
Date of Payment: June 3, 1918.
Fee: Twenty dollars.
Date of Filing. April 17, 1918.
Date of Circular of Allowance: April 29, 1918.

[*Words and figures enclosed in brackets erased in copy.]

The Commissioner of Patents will please apply the accompanying fee as indicated above.

Pennie, Davis, Marvin & Edmonds, Attorneys.

Send Patent to Pennie, Davis, Marvin & Edmonds, 35 Nassau Street, New York City.

229014—24

[fol. 54] Mail Room, Nov. 4, 1924, U. S. Patent Office

#7

UNITED STATES DISTRICT COURT, SOUTHERN DISTRICT OF NEW YORK

Honorable Commissioner of Patents, Washington, D. C.

SIR: In compliance with the Act of February 18, 1922

42

([41]* Stat. L. 3921), you are advised that there was filed on the 31st day of October, 1924, in this court an action, suit, or proceeding No. 530,234, entitled: Name: Lektophone Corporation, Plaintiff. Address: Jersey City, N. J., versus Name: Western Electric Company, Inc., Defendant. Address: New York, N. Y., brought upon the following patents:

	Patent No.	Date of patent	Patentee
1.	1,271,529	Apr. 17, 1918	Lektophone Corp.
2.			
3.			
4.			
5.			

In the above-entitled case, on the — day of ——, 192—, [fol. 55] the following patents have been included by — (insert amendment, answer, cross bill, or other pleading):

	Patent No.	Date of patent	Patentee
1.			
2.			
3.			
4.			
5.			

[*Words and figures enclosed in brackets erased in copy.]

In the above-entitled case the following decision has been rendered or decree issued:

. . . . . .

. . . . . .

In witness whereof I have affixed my hand this 3rd day of November, 1924, at New York, N. Y.

Alex. Gilchrist, Jr., Clerk of Said Court.

Mail Room, May 26, 1925, U. S. Patent Office

#8

UNITED STATES DISTRICT COURT, EASTERN DISTRICT OF NEW YORK

Honorable Commissioner of Patents, Washington, D. C.

SIR: In compliance with the Act of February 18, 1922
42
([41]* Stat. L. —), you are advised that there was filed on [fol. 56] the 3rd day of March, 1925, in this court an action, suit, or proceeding No. 2075, entitled Name: Lektophone Corp., Plaintiff, Address: Jersey City, N. J., versus Name: Sylo Lighting Fixture Co., Defendant, Address: 166 Flatbush Ave., Brooklyn, New York, brought upon the following patents:

	Patent No.	Date of patent	Patentee
1.	1,271,527	July 2, 1918	Plaintiff as Assignee
2.	1,271,529	July 2, 1918	Plaintiff as Assignee
3.	.....	.....	.....
4.	.....	.....	.....
5.	.....	.....	.....

In the above-entitled case, on the — day of ——, 192–, the following patents have been included by — (insert amendment, answer, cross bill, or other pleading):

[*Words and figures enclosed in brackets erased in copy.]

Patent No.	Date of patent	Patentee
1.		
2.		
3.		
4.		
5.		

In the above-entitled case the following decision has been rendered or decree issued:

.....

.....

[Matter enclosed between rules erased in copy.]

[fol. 57] In witness whereof I have affixed my hand this 25th day of May, 1925, at Brooklyn, New York.

Percy G. B. Gilker, Clerk of Said Court.

229014—26

Mail Room, Nov. 3, 1926, U. S. Patent Office

#9

UNITED STATES DISTRICT COURT, DISTRICT OF NEW JERSEY

Honorable Commissioner of Patents, Washington, D. C.

SIR: In compliance with the Act of February 18, 1922 42
([41]* Stat. L. —), you are advised that there was filed on the 4th day of September, 1925, in this court an action, suit, or proceeding, No. E.—1431, entitled Name: Lektophone Corporation, Plaintiff, Address: Jersey City, N. J., versus Name: De Forest Radio Company, Defendant, Address: 139 Franklin St., Jersey City, N. J., brought upon the fol-
[fol. 58] lowing patents:

Patent No.	Date of patent	Patentee
1. 1,271,527	July 14, 1913	Marcus C. Hopkins
2. 1,271,529	July 14, 1913	Marcus C. Hopkins
3.		
4.		
5.		

[*Words and figures enclosed in brackets erased in copy.]

1,271,529. Patented July 2, 1918.

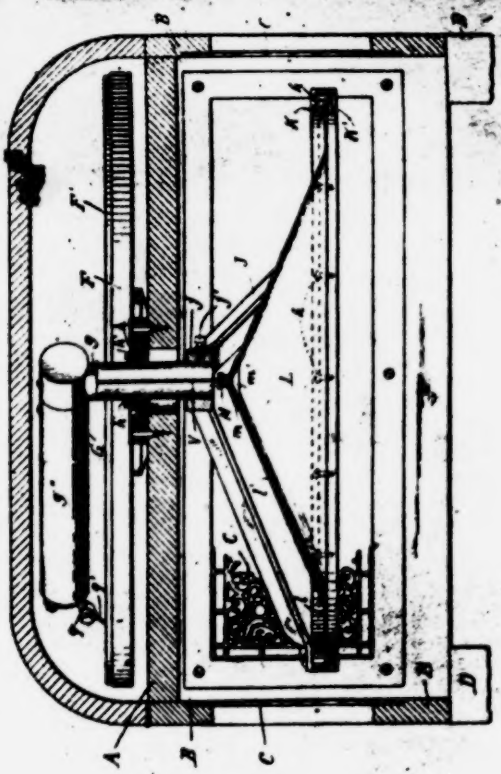

Inventor
Marcus C. Hopkins
By Attorneys
Pennie, Davis, Marvin & Edmonds

30

In the above-entitled case, on the — day of ——, 192–, the following patents have been included by — (insert amendment, answer, cross bill, and other pleading):

Patent No.	Date of patent	Patentee
1.		
2.		
3.		
4.		
5.		

In the above-entitled case the following decision has been rendered or decree issued:

. . . . . .

. . . . . .

In witness whereof I have affixed my hand this 28th day of October, 1925, at Trenton, N. J.

George T. Cranmer, Clerk of said Court. R. S. Chevrier, Deputy.

229014—27

(Here follows drawing, side folio 59)

[fol. 60] United States Patent Office

Marcus C. Hopkins, of New York, N. Y., Assignor by Mesne Assignments, to Lektophone Corporation, of New York, N. Y., a Corporation of Delaware

Acoustic Device

Specification of Letters Patent

1,271,529. Patented July 2, 1918

Original application filed July 14, 1913. Serial No. 778,826. Renewed March 22, 1918, Serial No. 224,048. Divided and this application filed April 17, 1918. Serial No. 229,014

To all whom it may concern:

Be it known that I, Marcus C. Hopkins, a citizen of the United States, residing in the borough of Manhattan, city,

county, and State of New York, have invented certain new and useful Improvements in Acoustic Devices; and I do hereby declare the following to be a full, clear, and exact description of the invention, such as will enable others skilled in the art to which it appertains to make and use the same.

This invention relates to instruments which reproduce sounds; and is particularly directed to the attainment of a direct propagation, in free air, from a record or equivalent element subjected to the action of the original sound waves or vibrations, of self-sustaining sound waves substantially corresponding in intensity and amplitude, as well as in pitch or timbre, to the said original sound waves, as distinguished from an initial generation of violent air disturbances in a confined space, and a subsequent transformation of such disturbances into self-sustaining sound waves by means of a megaphone, horn or other amplifier.

In the case of a talking machine, the device employed to propagate the regenerated sound waves in air comprises the reproducer or sound-box and the horn; but the reproducer alone is incapable of propagating sound waves of the character above stated because of the fact that the air disturbances which are produced by its diaphragm and which issue through its mouth-piece are almost immediately dissipated in heat or in waves which are not heard at any considerable distance if the horn be removed. Consequently, it is usual in all instruments of the class indicated to employ an amplifier of some sort to resist transformation into heat and to control the lateral form of the wave during a progressive spreading action which is accompanied by a lessening of the violence of the disturbance until a wave front of great area is attained having a movement appropriate to the sound conductivity of air. In this way, it has been found practicable to transform a satisfactory part of the energy, obtained from a moving record, into self-sustaining sound waves in air; but in every instance such method has been accompanied by distortions of the true recorded sounds in the reproducer, and more particularly in the horn or amplifier, giving rise to those characteristic sounds known as phonograph and horn sounds. These distortions of the true sounds are in a measure impressed upon the record in its making, but are more noticeable in the reproduction, where a suppression of character and overtones,

the loss of timbre in instruments and the voice, and the accentuation of notes of certain pitch, so change the recorded number that a faithful reproduction is not obtained.

It is the object of the present invention to regenerate the original sounds directly from the record or other element subjected to the action of such sounds, without interposition of a confined body of air and without the employment of a restrictive transformer, such as a horn. According to the invention, the sound regenerator comprises a tympanum of relatively great area freely exposed to unconfined air, in which the sounds are to be propagated; the vibrations produced by the record or its equivalent,—that is, the element on which the original sounds or sound waves are recorded, or which is otherwise subjected to the vibrating action of said sounds or sound waves and may, therefore, be termed the "sound-vibrated" element—being faithfully transmitted to the tympanum in such manner that the latter excites directly in the free air surrounding it, sound waves of an intensity and amplitude substantially corresponding to the original sound waves. In other words, the original sounds are directly regenerated by the vibrating tympanum without the interposition of a restrictive or sound modifying transformer.

The invention consists, briefly, in the provision of a tympanum of novel construction, which is capable of responding to the high frequency vibrations employed in the reproduction of sounds, and of imparting these vibrations to a large body of air; and it is to be considered as a division of the invention shown and described in my prior application, renewed March 22, 1918, No. 224,048.

The accompanying drawing illustrates the improved tympanum incorporated in a sound-producing machine of the kind disclosed in said application, the single figure being a vertical sectional view taken transversely through the [fol. 61] machine. Reference may be had to this application for a disclosure of the complete machine; and in order to facilitate an understanding of the present invention as compared with such disclosure, the same reference characters will be employed as in the said earlier application to indicate corresponding parts.

The machine represented in said drawing is mounted within a cabinet having a deck A, upon which the motor

(not shown) and the sound regenerator are mounted. Side walls B extend downwardly from the edges of the deck A, and are preferably apertured in all sides and provided with openwork grills C, which afford substantially uninterrupted air paths for the sound waves from the interior of the cabinet in all directions laterally to the surrounding atmosphere. In the machine shown, the cabinet is bottomless and provided with legs D at its four corners. The motor may be of any suitable type, and is connected to drive the shaft of the turn-table F through the intermediary of gearing, as is usual, said shaft projecting upwardly through the deck A. The turn-table carries the record F′, which in this instance is the element directly acted upon by the original sound vibrations which are to be subsequently regenerated or reproduced; that is to say, the record, in the present construction, is the "sound-vibrated" element.

The sound regenerator has a right-angled tubular support G, the vertical arm g of which is engaged at diametrically-opposite points by bearing screws h′, which project inwardly from and are carried by a ring h of larger diameter than the said arm g, as described in said prior application. The screws h′ form an horizontal axis perpendicular to the horizontal arm g″ of the right-angled support G, about which axis the arm g″ can swing in a vertical plane, the vertical arm g the while being inclined within the ring h. The latter forms part of an annular bearing device secured upon the deck A, the open central portion of which device alines with an opening of larger diameter in said deck, and the said vertical arm g of the support G extends downwardly through these openings and has its lower extremity fitted in the hub j of a conical spider J and fastened to the same by a set screw j′.

The spider J in the present construction has three arms, only two of which appear, however; and to the lower ends of these arms there is secured by screws an annulus consisting of two ponderous rings K, K′ of metal, which are clamped together by screws k spaced at short intervals. Two of the three arms of the said spider are screwed tightly to the rings K, K′, and the third is so arranged that the rings K, K′ can be secured at varying distances from the foot of this third arm, there being sufficient spring in the spider arms to permit of an adjustment at this point of one-

quarter of an inch or so, if desired. This detail is illustrated in my earlier case, and for that reason is not represented in the present case.

The tympanum L, which forms the subject of the present case, is constructed of light, vibratile material and has an annular plane peripheral portion or supporting rim l, the outer edge of which is tightly gripped and rigidly supported between the rings K, K′, and a central conical portion l′ rising from the inner edge of the said rim l. If satisfactory regeneration of sounds from a record or other sound-vibrated element is to be had, the whole diameter of the tympanum, that is, the diameter of the aperture in the rings K, K′ should exceed nine inches in order that the conditions required to regenerate the sound waves in the manner above described shall be fulfilled. The base of the central conical portion l′ should exceed in area one-half of the effective area of the entire tympanum, that is, the area of the aperture in the rings K, K′; or in other words, the diameter of the base of said conical portion should be at least eight-tenths of the diameter of the said aperture. The altitude of the conical portion l′ should be at least one-quarter of the diameter of its base.

It is, of course, possible to make some variation from the approximate sizes given without materially altering the result; but if the tympanum is constructed as shown in the drawing, any great variation from these proportions will be found to affect the character of the reproduction. It is of vital importance that the tympanum be made of crisp, strong material, having considerable rigidity within itself, and it is also of vital importance that the tympanum as a whole be extremely light and have as little inertia as possible without a weakening effect. The tympanum is shown of conical form with a smooth surface, and this has been found to be very satisfactory. The conical shape is given the tympanum so that shocks or vibrations impressed upon the apex of the cone in a direction toward its base will move the whole cone bodily, the strains being imparted edgewise of the material and no wave motions being set up in the thin material of the cone. The curvature of the walls of the cone precludes the setting up of waves in the material; and the intended object, a simultaneous movement of the whole conical portion of the tympanum, is thus attained.

While I prefer to construct the tympanum in the form described, and shown with a smooth surface, especially in view of the ease of construction, yet it is possible to form radial or concentric corrugations in the plane peripheral portion l and produce a light, stiff and very satisfactory article for [fol. 62] the purpose. It is conceivable, too, that when the tympanum is provided with corrugations as just suggested, some variation from the proportions above given may be made; but such variations will not be great. The tympanum should preferably be constructed of a colloidal substance, and should be from 3 to 20 thousandths of an inch in thickness according to the crispness or stiff character of the material used. Compressed fibrous material, such as hot pressed paper or fiber, has been found to act satisfactorily.

It will be noted that in the construction illustrated, the arms of the spider J incline downwardly to correspond with the conical shape of the tympanum L, the apex of the conical portion of the tympanum pointing upwardly toward the deck A of the cabinet, and, also, that the concave side of the said tympanum is open to the surrounding atmosphere through the open bottom of the cabinet, no obstructions being presented to the sound waves issuing from the concave surface of the tympanum.

A cap M is secured to the apex of the conical portion l of the tympanum, and this cap should be of more rigid construction than the remainder of the tympanum and should preferably be three-eighths of an inch or more in diameter. I prefer to make the cap M of metal, extremely light but very rigid, and in the form of two cones m, m′ screwed tightly together upon opposite sides of the tympanum so as to grip the material thereof with their edges. In order that a tight and positive application of the cones forming the cap M to the conical portion of the tympanum may be had, it is preferable to form the inner cone m′ of lesser angle, and the outer cone m of greater angle than the said conical portion, in which case their edges will securely grip the tympanum material when they are fastened together.

The vibrations or sound waves originally imparted to the record or its equivalent may be transmitted therefrom to the tympanum to vibrate the same in the manner and by means of the mechanism shown and described in my afore-

said aplication above identified, or by means of some other approved transmission means or mechanism, as will be understood. In any event, such means or mechanism forms no part of the present case, however, and for that reason requires no extended disclosure. It is believed sufficient to state, therefore, that in the arrangement illustrated the mechanism in question is located within the horizontal arm g″ of the support G, and is connected at its forward end with the stylus holder q, the other end of said mechanism having connected to it a vertical rod V, which extends downwardly through the interior of the vertical arm g of the support and is rigidly secured to the cap M of the tympanum. In consequence, the vibrations of the stylus q mounted in said holder and produced in the usual way by the phonic lines on the record, will be transmitted from the stylus through the transmission mechanism to the rod V, which will be vibrated endwise, the endwise vibrations of said rod being directly impressed upon the tympanum L.

I claim:

1. An acoustic device, comprising a tympanum rigidly supported at its periphery and having a free area exceeding nine inches in diameter and a conical portion, the diameter of which is not less than eight-tenths of the diameter of said free area.

2. An acoustic device, comprising a tympanum rigidly supported at its periphery and having a free area exceeding nine inches in diameter and a conical portion, the diameter of which is not less than eight-tenths of the diameter of said free area, said conical portion being rigid in the direction of the axis of the tympanum.

3. An acoustic device, comprising a tympanum rigidly supported at its periphery and having a free area exceeding nine inches in diameter and a conical portion, the diameter of which is not less than eight-tenths of the diameter of said free area, the altitude of said conical portion being substantially one-quarter of the diameter of its base.

4. An acoustic device, comprising a tympanum support having a circular aperture, and a light tympanum freely exposed to unconfined air and having its outer edge rigidly mounted on said support in said aperture; said tympanum having a central conical portion, the base of which exceeds

in area one-half the effective area of the said tympanum; the tympanum being of sufficient area to impart to the surrounding free air, when vibrated, sound waves substantially corresponding in intensity to the original sound waves.

5. An acoustic device, comprising a tympanum support having a circular aperture, and a light vibratile tympanum exceeding nine inches in diameter, having its outer edge rigidly mounted on said support; said tympanum being shaped to provide an annular rim adjacent said support, and a conical portion springing from the inner edge of said annular rim, the diameter of the base of said conical portion being not less than eight-tenths of the said circular aperture in said support.

6. An acoustic device, comprising a tympanum support having a circular aperture, and a light vibratile tympanum mounted in said aperture and having its outer edge secured to said support; said tympanum being shaped to provide an [fol. 63] annular rim, the outer diameter of which exceeds nine inches, and a conical portion springing from the inner edge of said annular rim, the altitude of said conical portion being substantially one-fourth of the diameter of its base.

7. An acoustic device, comprising a tympanum support having a circular aperture exceeding nine inches in diameter, and a light vibratile tympanum mounted in said aperture and having its outer edge rigidly secured to said support; said tympanum being shaped to provide an annular rim adjacent said support, and a conical portion springing from the inner edge of said annular rim, the diameter of the base of said conical portion being not less than eight-tenths of the diameter of said circular aperture, and the altitude of said conical portion being substantially one-quarter of the diameter of its base.

8. An acoustic device, comprising a tympanum embodying a bodily movable, central conical portion, and an annular rim which encircles said conical portion and which is rigidly supported, said conical portion being freely exposed on all sides to unconfined air and being of sufficient area to produce self-sustaining sound waves in the surrounding air when vibrated, substantially as described.

In testimony whereof I affix my signature.

Marcus C. Hopkins.

[fol. 64]

2—421

1918

CONTENTS

1. Application—2 papers.
2. Letter—Apl. 12/18.
3. Amdt. A. 4/20/18.
4. Amdt. B. June 3/18.
5. Exrs. Amdt. 6/8/18.
6. Notice of Entry of Amendment—June 7/18.
7. Notice of Suit—Nov. 4, 1924.
8. Notice of Suit—May 26, 1925.
9. Notice of Suit—Nov. 3, 1925.
10. .....
11. .....
12. .....
13. .....
14. .....
15. .....
16. .....
17. .....
18. .....
19. .....
20. .....
21. .....
22. .....
23. .....
24. .....
25. .....
26. .....
27. .....
28. .....

[fol. 65]

29. .....
30. .....
31. .....
32. .....
33. .....
34. .....
35. .....
36. .....
37. .....
38. .....

39. .....
40. .....
41. .....
42. .....
43. .....
44. .....
45. .....
46. .....
47. .....
48. .....
49. .....
50. .....

229014—28

(Here follows drawing, side folio 66)

[fol. 67] [Endorsed:] No. 1726. United States District Court. Lektophone vs. Rola. Plfts. Exhibit No. 6. Filed 5/10/28. Walter B. Maling, Clerk. By A. C. Aurich, Deputy Clerk.

No. 5712. United States Circuit Court of Appeals for the Ninth Circuit. Filed Feb. 5, 1929. Paul P. O'Brien, Clerk.

[fol. 68] PLAINTIFF'S EXHIBIT NO. 7

2—390

DEPARTMENT OF COMMERCE, PATENT OFFICE

To all persons to whom these presents shall come, Greeting:

This is to certify that the annexed is a true copy from the records of this office of the File Wrapper, Contents and Drawings, in the matter of the Letters Patent of Marcus C. Hopkins, Assignor, by Mesne Assignments, to Lektophone Corporation, Number 1,271,527, Granted July 2, 1918, for Improvement in Sound-Regenerating Machines.

In testimony whereof I have hereunto set my hand and caused the seal of the Patent Office to be affixed, at the City of Washington, this fourteenth day of November, in the year of our Lord, one thousand nine hundred and twenty-five and of the Independence of the United States of America the one hundred and fiftieth.

Thomas E. Robertson, Commissioner of Patents.

Attest: D. E. Wilson, Chief of Division. (Seal.)

M. C. HOPKINS.
ACOUSTIC DEVICE.
APPLICATION FILED APR. 17, 1918.

1,271,529. **Patented July 2, 1918.**

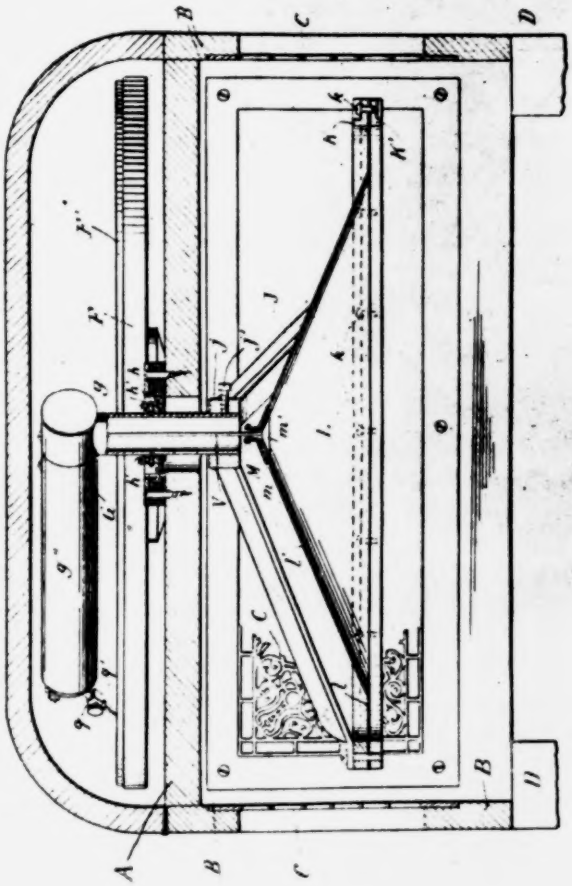

Inventor:
Marcus C. Hopkins

By Attorneys
Pennie, Davis, Marvin & Edmonds

No 3

Apr 22 1918

[fol. 69] Renewal. 2036
1913

Forfeited
9

110
(Ex'r's Book) 245

Div. 20
Number (Series of 1900), Series of 1915.
[778.826]* 224048 Patent No. 1271527
Name—Marcus C. Hopkins, Assor. [to John C. Pennie and William H. Davis, both of New York, N. Y.,]* by mesne assigts, to Lektophone Corporation, of N. Y., [New York,]* a Corp. of Delaware, of Jersey City.
County of .....
State of New Jersey.
Invention—Sound Regenerating Machine.

Parts of Application Filed.	Original	Renewed
	Petition— July 14, 1913	Mar. 22, 1918
	Affidavit— " " 1913	....., 191-
	Specification— " " 1913	....., 191-
	Drawing, 5 sheets " " 1913	Certificate of
	Photo Copy— , 191-	Correction, 191-
	First Fee Cash—	Sept. 28, 1920
	$15, July 14, 1913	$15, Mar. 22, 1918
	First Fee Cert.— ,191-	
	Appl. filed com-	....., 191-
	plete— July 14, 1913	Mar. 22, 1918

Division of App. No. ....., filed ....., 191..

[fol. 70]

Examined and Passed	Pr.—examined and
for Issue April 7, 1916	passed— April 23, 1918
W. D. Groesbeck	W. D. Groesbeck, Exr.
Exr. Div. 23	Div. 232
Notice of Allowance—	May 1, 1918
Apr. 11, 1916, , 191-	4 $20 June 3, 1918
By Commissioner.	....., 191-
Final Fee Cash— , 191-	
Final Fee Cert.— , 191-	
Patented July 2, 1918	

[*Words and figures enclosed in brackets erased in copy.]

Attorney—Pennie, Davis & Goldsborough, #35 Nassau Street, New York, N. Y.
Associate Attorney .....
(No. of Claims Allowed—31) Title as Allowed—Sound-Regenerating Machine (Cl. [181—3]*)

274—16

Memorandum.

The first fee of $15, applied to the application of Marcus C. Hopkins, was included in composite letter No. — received July 14, 1913, from Pennie, Davis & Goldsborough, which letter is on file in the Mail Room.

A. C. Cosdon, Application Clerk.

778826—1

[fol. 71] Mail Room, Jul 14, 1918, U. S. Patent Office

(Div. 23.)

778,826

11759

Petition.

2036

To the Commissioner of Patents:

Your petitioner Marcus C. Hopkins, a citizen of the United States, residing at No. 2859 Boulevard, Jersey City, County of Hudson and State of New Jersey, and whose post-office address is No. 35 Nassau Street, New York City, prays that Letters Patent may be granted to him for improvements in sound regenerating machine as set forth in the annexed specification.

And he hereby appoints John C. Pennie and William H. Davis (constituting the firm of Pennie, Davis & Goldsborough, 35 Nassau Street, New York City), and each of them his Attorneys, with full power of substitution and revocation, to prosecute this application, to make alterations and amendments therein, to sign the drawings, to receive

[*Words and figures enclosed in brackets erased in copy.]

the Patent, and to transact all business in the Patent Office connected therewith.

Marcus C. Hopkins.

[fol. 72] [Specification]*

To all whom it may concern:

Be it known that I, Marcus C. Hopkins, a citizen of the United States, residing at No. 2859 Boulevard, Jersey City, county of Hudson and State of New Jersey, have invented certain new and useful Improvements in Sound-regenerating Machines;

And I do hereby declare the following to be a full, clear, and exact description of the invention, such as will enable others skilled in the art to which it appertains to and use the same.

778826—2

2036

11760

This invention relates to instruments which reproduce sounds, such as the talking machine and the phonograph, and is particularly directed to the attainment of in free air from a record

Per A. a direct propagation ∧ of self-sustaining sound

Per A. waves ∧ [in air from a record,]* as distinguished B1 from an initial generation of violent air disturb-

Per A. ances in a confined space [which would not be propagated as sound,]* and a subsequent transformation of such disturbances into self-sustaining sound waves by means of the megaphone or trumpet, commonly employed with most existing machines.

such regenerated

B. The device employed to propagate ∧ [self sustaining]* sound waves in air from a record I herein term a "regenerator," and, this device in the phono-

[fol. 73] graph and talking machine comprises the "reproducer" together with / the trumpet. The "reproducer" alone is incapa-

[*Words and figures enclosed in brackets erased in copy.]

such
ble of generating ∧ ["self sustaining"]* sound waves in air, and the violent air disturbances which are produced
which
Per A. by its diaphragm, and ∧ issue through its mouth piece, are almost immediately dissipated
[of small volume and high
[in heat or]* tension]*
" " ∧ in waves, ∧ which are not heard [or in heat,
" " at any considerable distance
" " as is at once apparent]* ∧ if the horn be removed.
" " In the case of the "reproducer," [it would appear that]* all of the energy recieved from
relatively violent
the record issues from its mouth as ∧ [high tension]* disturbances, which are impressed upon a very small amount
such
of free air, quite incapable of conducting ∧ disturbances [of such tension]* without transformation losses, and therefore
Per A. ∧ the trumpet is resorted to to resist transfor-
into heat to
mation / and / control the lateral form of the wave during a progressive spreading action, which is ac-
violence of the disturbance,
companied by a lessening of the ∧ [tension,]* un-

having
til a wave front of great area is attained [with]* ∧ a
movement
Per A. [tension]* ∧ appropriate to the sound conductivity of air. In this way it has been found practicable to transform a satisfactory part of the energy obtained from a moving record, into self-sustaining sound waves in air, but in every instance this method has been accompanied by distortions of the true recorded sounds

[*Words and figures enclosed in brackets erased in copy.]

in the reproducer, and more particularly in the trumpet, giving rise to those characteristics sounds, known as phonograph and horn sounds. These distortions of the true sounds are in a measure impressed upon the record in its making, but are more noticeable in the reproduction where a suppression of character and over-tones, the loss of "timbre" in instruments and the voice, and the accentuation of notes of certain pitch, so change the recorded

not obtained

Per A. number that a faithful reproduction is ∧ [comparatively unknown].*

It is an object of the present invention to regenerate the recorded sounds directly from the record, without the in-

and without

Per A. terposition of a confined body of air [or]* ∧ the employment of a restrictive transformer, such as a horn.

The "sound regenerator," in the case of the present invention, comprises a tympanum of relatively great area

unconfined

Per A. freely exposed to ∧ [the]* air, in which the

Per A. sounds are to be propagated, [as such,]* and [fol. 75] a mechanical transmission which faithfully transmit the vibrations produced by the record, to the tympanum, in such a manner that the tympanum ex-

Sub. B².

---

such a as

Per A. cites sound waves of ∧ [a proper]* tension ∧ to in

be self-sustaining in air, [to]* ∧ a body of air of sufficient bulk to receive as sound waves a satisfactory amount of

2 778826—4

11762

the available energy receivable from the record without

of the record

Per A. undue wear ∧.

[Matter enclosed between rules erased in copy.]

[*Words and figures enclosed in brackets erased in copy.]

The invention consists in providing a tympanum of novel construction, which is capable of responding to the high frequency vibrations employed in the reproduction of

of

Per A. sounds, and ∧ imparting these vibrations to a Per A. large body of air; in providing a suitable mounting for this tympanum to permit it to exercise its function, and in providing a vibration transmission for receiving the vibratory movement from the record and transmitting this movement to the tympanum, without change of character and appreciable loss of energy. The invention also comprehends certain combinations of parts and details of construction and location hereinafter particularly described and specifically pointed out in the appended claims.

I have illustrated in the accompanying drawings a sound reproducing machine embodying the several novel features [fol. 76] of the invention as they may be employed in regenerating sounds from records made with either laterally or vertically sinuous grooves.

In the drawings,

Figure 1 is a plan view of the machine with the cover raised.

Fig. 2 is a vertical section on line 2—2 of Fig. 1, with cover and transmission arm raised.

Fig. 3 is a vertical section on line 3—3 of Fig. 1 with cover closed.

Fig. 4 is a vertical section on line 2—2 of Fig. 1 with cover closed and transmission arm in playing position.

Fig. 5 is a longitudinal section through the transmission arm on line 5—5 of Fig. 4.

Fig. 6 is a vertical longitudinal section through the transmission arm on line 6—6 of Fig. 5.

Fig. 7 is a vertical section on line 7—7 of Fig. 6.

Fig. 8 is an end view of the transmission arm.

Fig. 9 is a cross-section on line 9—9 of Fig. 5, and

Fig. 10 is a view similar to Fig. 8 of a modified arrangement for vertically sinuous records.

Referring to the drawings, the illustrated machine is mounted within a cabinet having a deck A upon which the motor and sound regenerator are supported. Side walls B downwardly extending from the edges of the deck A are preferably apertured on all sides and provided with

e

[fol. 77] open work grills C which afford substantially uninterrupted air paths for the sound waves from the interior of the cabinet in all directions laterally to the surrounding atmosphere. In the machine shown the cabinet is bottomless and provided with legs D at its four corners.

The motor may be of any suitable type, that shown having a frame E, spring drums e, winding gear e′, spiral drive gear e″, high pitch spiral table shaft e‴ and governer e⁗. The frame E of the motor is secured against the under side of the deck A depending therefrom and the table shaft pro-

jects upwardly through the deck A and carries the circular record table F above the deck. The motor frame E is preferably insulated from the deck A by rubber washers not shown.

The sound regenerator has a right-angled tubular support G, the vertical arm g of which has diametrically opposite conical depressions g′ which are engaged by pointed screws h′ which project inwardly from and are threaded through a ring h of larger internal diameter than the external diameter of the vertical arm g of the right-angled support G. The pointed screws h′ engage the depressions g′ forming a horizontal axis perpedicular to the horizontal arm g″ of the right-angled support G about which axis the arm g″ can swing in a vertical plane, the vertical arm g the while being inclined within the ring h. The ring h com-

[fol. 78] prises the ring h proper and an annular retaining plate h″ screwed upon the lower face of the ring h, an annular groove at the junction of the ring h and plate h″ receiving the inner edge of a holding plate H in such manner that the ring h and the right-angled support G may be turned about a vertical axis in the holding plate H.

The holding plate H is clamped between two rubber or felt rings i, i′, the lower ring i′ resting upon the deck A. A

ring I is placed upon the top of the upper ring i and screws i″ have their heads seated in the ring I and are screwed down into the *the* deck A. The ring H and the rubber or felt rings i and i′ have large holes through which the screws i″ pass, so that these screws do not come

into contact with the ring H and the right-angled support G is therefore entirely insulated from the deck A by the rubber or felt rings. The vertical arm g of the right-angled support G extends downwardly through an aperture in the deck A at a point near the periphery of the record table F. A conical spider J shown as having three arms has its hub j fitted to the lower extremity of the vertical arm g of the right-angled support G, and is secured thereon by a set scraw j′. To the ends of the arms of the spider J is secured by screws an annul*us* consisting of two ponderous rings K,

#

∧ K′ of metal, these two rings being clamped together
F′. by screws k spaced at short intervals. ∧ [The spider J
[fol. 79] is shown having three arms, two of which]* are screwed tightly to the rings K, K′ and the third is as tightly secured to said rings but by adjustable screws k′ k″ arranged in such manner that the rings K, K′ can be secured at varying distances from the foot of this third leg, there being sufficient spring in the spider legs to permit of an adjustment at this point of one-quarter of an inch or so, if desired. It will be seen that owing to the proximity of the mounting of the vertical arm g of the right-angled support G to the edge of the record table F, the spider J and the

ie

F. rings K, K′ will underl[y]* the record table and permit of a very compact arrangement of the working parts within the cabinet.

A tympanum L of light vibratile material has an annular plane peripheral portion *l*, the outer edge of which

or supporting rim l

Per B. peripheral portion ∧ *l* is tightly gripped

[*Words and figures enclosed in brackets erased in copy.]

and rigidly supported #

F². ∧ between the ponderous rings K, ∧ K′, and a cen-

tral conical portion *l′* rising from the inner edge of the annular plane peripheral portion. If satisfactory regeneration of sounds from a record is to be had, the whole diameter of the tympanum, that is, the diameter of the aperture in the rings K, K′, should exceed nine inches in

C. order that the conditions shall be fulfilled [which are]*

B³. called for by the correlation existing between the range of wave frequencies of the sounds which must be regenerated by a machine of this character and [fol. 80] the wave tension called for by the sound conductibility of free air.

[Matter enclosed between rules erased in copy.]

The base of the central conical portion *l′* of the tympanum should exceed in area one-half the effective area of the entire tympanum, that is, the area of the aperture in the rings #

K, ∧ K′; or in other words, the diameter of the base of said at least

C. conical portion should be [substantially]* eight-tenths of the diameter of the circular aperture in #

the supporting rings K, ∧ K′. The altitude of the conical portion *l′* of the tympanum should be at least

" ∧ [substantially]* one-quarter of the diameter of its base. It is, of course, possible to make some variation from the approximate sizes given without materially altering the result, but if the tympanum is made as shown in the drawings, any great variation from these proportions will be found to affect the character of the reproduction.

[*Words and figures enclosed in brackets erased in copy.]

It is of vital importance that the tympanum be made of crisp, strong material, having considerable rigidity within itself, and it is also of vital importance that the tympanum as a whole be extremely light and have as little inertia as possible without a weakening effect. The tympanum is

7 778826—9

11767

shown of conical form with a smooth surface, and this has been found to be very satisfactory. The conical shape is given the tympanum so that shocks or vibrations impressed [fol. 81] upon the apex of the cone in a direction towards its base will move the whole cone bodily, the strains being imparted edgewise of the material and no wave motions being set up in the thin material of the cone. The curva-

the

ture of the walls of the cone preclude / setting up of waves in the material and the intended object, a simultaneous movement of the whole conical portion of the tympanum, is attained. While I prefer to construct the tympanum in the form described and shown with a smooth surface, especially in view of the ease of construction, yet it is possible to form radial corrugations in the conical portion *l'* and radial or concentric corrugations in the plane peripheral portion *l* and produce a light, stiff and very satisfactory article for the purpose. It is possible that when the tympanum is provided with corrugations as just suggested, C. [that]* some variation from the proportions above given may be found possible, and perhaps advisable, but such variations from the proportions given will not be great. The tympanum should preferably be constructed of a colloidal substance and should be from 3 to 20 thousandths of an inch in thickness according to the crispness or stiff character of the material used. Compressed fibrous material, such as hot pressed paper or fiber, has been found to act satisfactorily,

---

but I prefer to employ hard rubber or vulcanite, as it is

8 778826—10

11768

more easily handled, is less affected by weather conditions [fol. 82] and lends itself to the production of a

---

[*Words and figures enclosed in brackets erased in copy.]

Per B. more finished commercial product. The hard rubber is pressed to shape while hot from the sheet and allowed to cool in the die. If a polished sheet has been used, the finished tympanum will have a beautifully polished appearance.

[Matter enclosed between rules erased in copy.]

It will be noted that the arms of the spider J incline downwardly to correspond with the conical shape of the tympanum L and that the apex of the conical portion of the tympanum is pointed upwardly toward the deck A of the cabinet, and that the concave side of the tympanum is open to the surrounding atmosphere through the open bottom of the cabinet, no obstructions being presented to the sound waves issuing from the concave surface of the tympanum.

" [It is probable]* that various forms of cabinets
" will be devised for machines of this character, but in practically every case it may be assumed
Per B. that one side of the tympanum will be directed toward some reflecting surface or portion of the cabinet or machine which will in a measure obstruct the sound waves issuing from the tympanum and in every such case the tympanum should have its convex side directed towards the obstructions and its concave side as open as possible toward the free air. This is suggested because the shape of the tympanum admits of a more intense pressive action in propagating a sound wave when a shock is applied to its apex in a direction toward its base than in the opposite direction.

[Matter enclosed between rules erased in copy.]

A cap M is secured to the apex of the conical portion *l'* of

[fol. 83] the tympanum L, and this cap should be of more rigid construction than the remainder of the tympanum and

---

[*Words and figures enclosed in brackets erased in copy.]

should preferably be three-eighths of an inch or more in diameter. I prefer to make the cap M of metal, extremely light but very rigid, and in the form of two cones m, m' screwed tightly together upon opposite sides of the tympanum and gripping with their edges the material of the conical portion of the tympanum. In order that a tight and positive application of the cones forming the cap M to the conical portion of the tympanum may be had, it is preferable to form the cone m' of lesser angle than the control portion of the tympanum, and the cone m of greater angle than the conical portion of the tympanum, in which case their edges will securely grip the tympanum material when they are secured together. The cap M is applied to the tympanum to receive the shocks which are to be applied to the tympanum as a whole, and convey them to sufficient of the material of the tympanum to insure the movement of the tympanum as a whole. This will be better understood when it is considered that if the shock were applied to paper or hard rubber at a single small point, the inertia of the tympanum as a whole would be sufficient to resist the attack and the material would be distorted or dented at that point, the effect of the shock upon the tympanum as a whole being entirely lost. The cap M being of hard material such as metal will resist the bending action and distribute the shock to so much of the surface of the material of the tym- [fol. 84] panum as is capable of successfully resisting the

shock, and *and* it will then be transmitted to the tympanum as a whole. The plane peripheral portion l of the tympanum maintains the place of the conical active portion of the tympanum and yields sufficiently to permit of the required motion of the conical portion, resisting, however, displacement of the conical portion in just that degree necessary to maintain the form and neutral position of the active conical portion. Were the plane peripherial portion l of considerably greater width or markedly narrower than described, its function would be destroyed to a degree corresponding to the remoteness of the departure from the approximate proportion given and the effective portion of

the conical portion of the tympanum would be proportionately lessened.

In the tubular arm g'' of the transmission support G are located two ponderous members or weights N and N'. These members N and N' are shown as insulated from the wall of the arm g'' by a tube o of insulating material, such as soft rubber or felt. One at least of the ponderous members N and N' must be movable relatively to the other and therefore it cannot be rigidly secured to the support G, and the insulating material becomes necessary to avoid rattling. I preferably insulate both of the ponderous members or weights N, N' from the wall of the transmission support G. [fol. 85] Pins P projecting from the ponderous member N, and sliding in holes in the other ponderous member N', act as guides and prevent disalinement and angular displacement of the movable ponderous member. Knife edge fulcra n and n' are secured in and project from the ends of the

ponderous members N and N', and in the form of the device shown in Figs. 1 to 9 the fulcra n are arranged horizontally and the fulcra n' are arranged vertically. A lever Q is mounted on the fulcra n' and is capable of movement upon a vertical axis. A style holder q projects from the lever Q downwardly at an incline so that the point of a style q' held in the style holder is considerably removed from the axis of the lever Q and movement given the style q' by the record will effect an oscillation of the lever Q about its vertical axis upon the fulcra n'. The lever Q has arms q'' and q''' projecting from opposite sides thereof, the arm q'' being near the top of the lever Q and the arm q''' being near the bottom of said lever. The reason for this arrangement of the arms upon the lever will presently appear.

A lever R is mounted upon the fulcra n and oscillates upon a horizontal axis. This lever has arms r and r' extending upwardly and downwardly from its opposite sides, the arm r projecting from a point near one end of the lever R, and the arm r' projecting from a point near the other end of the lever R. It will now be seen that a point upon the arm r of the lever R is opposite a similar point on the arm [fol. 86] q'' of the lever Q and these two points are con-

nected by rod link S. It will also be seen that a point upon the arm r′ of the lever R is opposite a point upon the arm q‴ of the lever Q, and these two points are connected by a rod link S′. The rod links S and S′ have eye-ends arranged in planes removed 90° from one another, and these eye-ends s are engaged by pivot screws s′ upon the arms of the levers Q and R. A parallelogram is

12 778826—14

11772

formed by the levers Q and R and the rod links S and S′, and in the form just described, which is adapted for a laterally sinuous groove in the record, oscillation of the lever Q about a vertical axis will produce like oscillations of the lever R about a horizontal axis. Springs T preferably mounted upon the pins P press the ponderous members N and N′ apart forcing the knife edge fulcra n and n′ tightly against the levers R and Q, and put the parallelogram of levers and links under tension, precluding any rattle or looseness of the levers upon the fulcra or of the eye-ends of the links upon their pivot screws, and as the movable ponderous member of the combination is insulated from the transmission support G, no rattle or displacement of the parts can take place when the record groove oscillates the lever Q, but such oscillation will be faithfully transmitted to the lever R. The ponderous members N and N′ have clearance holes s″ for the rod links S and S′.

An arm U projects from the central portion of the lever [fol. 87] R and to its end is rigidly secured a rod V which extends downwardly through the interior of the arm g of the transmission support G, its lower end being rigidly secured to the cap M of the tympanum. The rod V is nicked or thinned at v close to the arm U of the lever R to permit of a slight springing action which compensates for the very slight angular motion of the arm U when the lever R is oscillated. It will now be seen that the oscillation of the lever R about its horizontal axis imparted to it from the lever Q, will effect an

13 778826—15

11773

endwise vibration of the rod V which is directly impressed upon the tympanum L. A cap W closes the opening at the

angle of the transmission support G and the removal of this cap gives access to the working parts of the rear end of the transmission.

Insert F3 (13)

When a vertically sinuous record is employed the lever Q is mounted to oscillate about a horizontal axis, as shown in Fig. 10, no change in the lever R being required.

Insert A1 (2)

778826—16

11774

---

1. The combination of a direct sound regenerating machine and a cabinet therefor having apertures on all sides affording substantially free paths for the sound waves from the regenerator containing cavity of the cabinet to the surrounding atmosphere; substantially as described.

[fol. 88] 2. The combination of a direct sound regenerating machine with a bottomless cabinet containing said machine; substantially as described.

[Cls. 1 & 2]

3. The combination of a direct sound regenerating machine and a cabinet containing said machine, said
Sub. B' cabinet having an aperture leading from the regenerator-containing compartment to the surrounding atmosphere.

4. The combination of a cabinet and a direct sound regenerating machine mounted therein and insulated therefrom; substantially as described.

[Matter enclosed between rules erased in copy.]

3

Per A. [5].* The combination of a cabinet having two
Per A. compartments and a partition there between, of a record table and transmission arm located in one of said compartments and a tympanum located in the

---

[*Words and figures enclosed in brackets erased in copy.]

other of said compartments and connected with said transmission arm; substantially as described.

4

Per E. [6].* In a direct sound regeneration machine, the combination of a partition, a transmission arm supported on said partition to swing upon one side thereof and extending therethrough and a tympanum supported upon said transmission arm to swing upon the other side of said partition; substantially as described.

5

[7].* In a direct sound regenerating machine, the combination of a horizontal partition, a transmission support

778826—17

[fol. 89] 11775

mounted upon said partition to swing thereover and extending downwardly therethrough and a tympanum carried upon said support beneath said partition; substantially as described.

6

[8].* In a direct sound regenerating machine, the combination of a horizontal partition, a record holder mounted to rotate above said partition, a transmission support mounted upon said partition to swing above said record holder and extending downwardly through said partition and a tympanum carried by said support beneath said partition and under said record holder; substantially as described.

---

9. In a direct sound regenerating machine, the combination of a record holder, and a transmission support mounted to swing toward, from and across said record holder; substantially as described.

Per A.

[Matter enclosed between rules erased in copy.]

3 [9 7]*

[10].* In a direct sound regenerating machine, the com-

[*Words and figures enclosed in brackets erased in copy.]

bination of a record holder, a transmission support holder,

C. mounted to swing over said record ∧ [support]* and a tympanum carried by said support and extending under said record holder; substantially as described.

4 [10 8]*

[11].* In a direct sound regenerating machine, the combination with a record holder, of a transmission support mounted to swing about vertical and horizontal axes, said support having an arm extended to move

Insert A². above and across said record holder and ∧ a A²

having a free end and at the free end of

Per B. [fol. 90] second arm ∧ a tympanum carried ∧ [by]* said second arm with its axis at an angle to said first arm; substantially as described.

[11.]*

[12.]* in a direct sound regenerating machine,

Per B. the combination of a bottomless cabinet supported upon legs and a downwardly directed tympanum mounted within said cabinet; substantially as described.

[Matter enclosed between rules erased in copy.]

778826—18

11776

5. [12 9]*

[13].* ∧ In a sound regenerating machine, a vibration transmission comprising two ponderous members, fulcra carried by said members, an articulate parallelo-

Per F. gram having opposite sides mounted on said fulcra and means exerting pressure upon said ponderous members to place said parallelogram under tension; substantially as described.

[13]* 6. [10]*

F. [14.]* ∧ In a sound regenerating machine, a vibra-

[*Words and figures enclosed in brackets erased in copy.]

tion transmission comprising two ponderous members, fulcra carried by said members, an articulate parallelogram of non-extensible links and non-flexible levers, the levers of said parallelogram being mounted on said fulcra, and means exerting pressure upon said ponderous
B⁵. members to place said parallelogram under tension; substantially as described.

[fol. 91] [Cls. 7 to 12]

[14]* 7.

[15.]* A. A sound regenerator for directly propagating self-sustaining sound waves in air consisting of a ponderous support having a circular aperture, a light vibratile tympanum having its outer edge mounted on said support, said tympanum being shaped to provide an an-
Per B⁵. nular plane adjacent said support and a conical portion springing from the inner edge of said annular plane, and a cap of nonvibratile material rigidly secured to the apex of said conical portion of said tympanum; substantially as described.

15.

[16.]* A sound regenerator for directly propagating self-sustaining sound waves in air consisting of
Per A. a ponderous support having a circular aperture, a light tympanum mounted upon said support in said aperture, said tympanum having a central conical portion the base of which exceeds in area one-half the effective area of said tympanum; substantially as described.

16

[17.]* A sound regenerator for directly propagating self-sustaining sound waves in air, consisting of a ponder-

ous support having a circular aperture, a light vibratile tympanum exceeding nine inches in diameter having its outer edge mounted on said support; said tympanum being

---

[*Words and figures enclosed in brackets erased in copy.]

shaped to provide an annular plane adjacent said support [fol. 92] and a conical portion spring- from the inner edge of said annular plane, and a cap of non-vibratile material rigidly secured to the apex of said conical portion of said tympanum; substantiallly as described.

17.

[18.]* A sound regenerator for directly propagating self-sustaining sound waves in air consisting of a ponderous support having a circular aperture, a light vibratile tympanum mounted in said aperture and having its outer edge secured upon said support, said tympanum being shaped to provide an annular plane adjacent said support and a conical portion springing from the inner edge of said annular plane, the diameter of the base of said conical portion being substantially eight-tenths of the diameter of the said circular aperture in said support, and a cap of non-vibratile material rigidly secured to the apex of said conical portion of said tympanum; substantially as described.

18.

[19.]* A sound regenerator for directly propagating self-sustaining sound waves in air consisting of a ponderous support having a circular aperture, a light vibratile tympanum mounted in said aperture and having its outer edge secured to said support, said tympanum being shaped to provide an annular plane adjacent said support and a conical portion springing from the inner edge of said annular plane, the altitude of said conical portion being substantially one-quarter of the diameter of its base, and a cap of non-vibratile material rigidly secured to the apex of [fol. 93] said conical portion of said tympanum; substantially as described.

778826—20

19.

[20.]* A sound regenerator for directly propagating self-sustaining sound waves in air consisting of a ponderous support having a circular aperture exceeding nine inches in diameter, a light vibratile tympanum mounted in said aperture and having its outer edge secured to said support, said tympanum being shaped to provide an annular plane adjacent said support and a conical portion springing from

[*Words and figures enclosed in brackets erased in copy.]

the inner edge of said annular plane, the diameter of the base of said conical portion being substantially eight-tenths of the diameter of the said circular aperture in said support and the altitude of said conical portion being substantially one-quarter of the diameter of its base, and a cap of non-vibratile material rigidly secured to the apex of said conical portion of said tympanum; substantially as described.

[Matter enclosed between rules erased in copy.]

13. [20]*

[21. 17]* In a sound regenerating machine, a vibration transmission comprising two ponderous members, fulcra carried by said members, an articulate parallelogram of links and levers, the levers of said parallelo-
Per A. gram mounted upon said fulcra, pressure exerting means acting between said members and tending through said fulcra to hold said parallelogram under tension, and a style holder carried by one of said levers; substantially as described.

14. [21]*

[fol. 94] [22. 18]* In a sound regenerating machine, a vibration transmission comprising two ponderous members, guides for maintaining the relative positions of said members, fulcra carried by said members, an
Per A. articulate parallelogram of links and levers, the levers of said parallelogram mounted upon said fulcra, pressure exerting means acting between said members and tending through said fulcra to hold said parallelogram under tension, and a style holder carried by one of said levers; substantially as described.

778826—21

11779

15. [22 13 19]*

[23.]* In a sound regenerating machine, a vibration transmission comprising two ponderous members, guides for maintaining the relative positions of said members, fulcra carried by said members, an articulate parallelogram of links and levers, the levers of said parallelogram mounted upon said fulcra, pressure exerting means acting

---

[*Words and figures enclosed in brackets erased in copy.]

between said members and tending through said fulcra to hold said parallelogram under tension, and a style holder carried by one of said levers; substantially as described.

16. [23 14 20]*

[24.]* In a sound regenerating machine, a vibration transmission comprising two ponderous members, a vertical fulcrum on one of said members, a horizontal fulcrum on the other of said members, an articulate parallelogram of links and levers, the levers [fol. 95] of said parallelogram mounted upon said fulcra, and pressure exerting means acting between said members and tending through said fulcra to hold said parallelogram under tension; substantially as described.

Per A.

17. [24 21]*

[25.]* In a sound regenerating machine, a vibration transmission comprising two ponderous members, fulcra carried by said members, an articulate parallelogram of links and levers, the levers of said parallelogram mounted upon said fulcra, pressure exerting means acting between said members and tending through said fulcra to hold said parallelogram under tension, a style-holder carried by one of said levers, a direct sound regenerating tympanum connected to another of said levers and a pivoted support for said transmission and said tympanum; substantially as described.

778826—22

11780

[25 22]*

[26.]* 18. In a sound regenerating machine, a vibration transmission comprising a support, two ponderous members carried by said support, one *as* said members being movable upon said support, insulating material between said movable member and said support, fulcra carried by said members, an articulate parallelogram of links and levers, said levers being mounted on said fulcra and pressure exerting means acting between said members and tending through said fulcra to hold said parallelogram under tension; substantially as described.

26

[fol. 96] [27]* In a sound regenerating machine, a ten-

[*Words and figures enclosed in brackets erased in copy.]

sioned vibration transmission, a style-holder upon one end of said transmission and an untensioned tympanum connected with the opposite end of said tranmission; substantially as described.

27
Per B. [28.]* The combination of a direct sound regenerating machine and a bottomless cabinet therefor, having apertures on all side- affording substantially free paths for the sound waves from the regenerator-containing cavity of the cabinet to the surrounding atmosphere; substantially as described.

[Matter enclosed between rules erased in copy.]

19. [28 23]*

[29.]* In a direct sound regenerating machine, the combination of a bottomless cabinet having apertures on all sides and a horizontal partition therein, a record holder mounted upon and above said partition, a motor for driv-
d
Per B. ing said record holder, a right angle ∧ transmission support mounted to swing upon horizontal and vertical axes upon said partition adjacent and periphery of said record holder, one arm of said support adapted to be swung over said record holder, and the other arm of said support extending downwardly through said partition, a vibration transmission mounted within and insulated from said transmission support and comprising two ponderous members carrying fulcra, a parallelogram

[fol. 97] of links and levers, said levers mounted upon said fulcra, pressure exerting means acting between said members and tending through said fulcra to hold said parallelogram under tension, a style-holder carried by one of said levers at the outer end of said transmission support, a spider mounted upon said transmission support below said partition, a ponderous tympanum support carried by said spider, a direct sound regenerating tympanum mounted upon said ponderous tympanum support, said tympanum

---

[*Words and figures enclosed in brackets erased in copy.]

being of light vibratile material and having a conical form throughout the greater part of its area and a positive connection between the apex of the conical portion of said tympanum and the inner end of the parallelogram of the said vibration transmission; substantially as described.

(4)

Insert A3.

[Cls. 20 to 27]

70

778826—24

11782

In testimony whereof I affix my signature, in presence of two witnesses.

Marcus C. Hopkins.

Witnesses: M. A. Bill, Leon W. Rosenthal.

[fol. 98] Oath

Cert. Spec. as Filed 6100

STATE OF NEW YORK,
County of New York, ss:

Marcus C. Hopkins, the above-named petitioner, being duly sworn, deposes and says that he is a citizen of the United States, and resident of Jersey City, County of Hudson and State of New Jersey, and that he verily believes himself to be the original, first and sole inventor of the improvement in sound regenerating machine described and claimed in the annexed specification; that he does not know and does not believe that the same was ever known or used before his invention or discovery thereof, or patented or described in any printed publication in any country before his invention or discovery thereof, or more than two years prior to this application, or in public use or on sale in the United States for more than two years prior to this application; that said invention has not been patented in any country foreign to the United States on an application filed by him or his legal representatives or assigns more than twelve months prior to this application; and that no appli-

cation for patent on said improvement has been filed by him or his representatives or assigns in any country foreign to the United States.

Marcus C. Hopkins.

[fol. 99] Subscribed and sworn to before me this 12th day of July, 1913. M. A. Bill (Signature of Notary Public), Notary Public (Official Character).

Cert. Appln. as filed 6500.

778826—25

2-260

Div. 23, Room 379

Paper No. 2, Rej.

Address only "The Commissioner of Patents, Washington, D. C."

All communications respecting this application should give the serial number, date of filing, and title of invention.

JHY—Sut.

Department of the Interior, United States Patent Office, Washington

Sept. 9, 1913, U. S. Patent Office. Sep. 9, 1913, Mailed.

Pennie, Davis & Goldsborough, #35 Nassau St., New York, N. Y.:

Please find below a communication from the Examiner in charge of the application of Marcus C. Hopkins, for Sound Regenerating Machine, filed July 14, 1913, serial number 778,826.

E. B. Moore, Commissioner of Patents.

[fol. 100] In the preamble, line 5, a should follow "in."

The matter of the first page of the specification is objected to as lacking in clearness and inaccurate in part. It is not clear what applicant means in the first paragraph, but if he means that a sound box without the aid of a horn will not produce audible sound waves he is clearly wrong. Attention is directed to a common form of phonograph wherein

ear-tubes of uniform diameter lead directly from the sound box. What does applicant mean by "self-sustaining sound waves"? The matter of line 15, and to "air" line 16, is objected to as incorrect. What does applicant mean by "high tension disturbances"?

e''' is e'' on figure 1. g'' is g' on figure 8.

Page 8, lines 7 and 8, why are no wave motions set up in the thin material of the cone?

A formal preamble to the claims should be inserted at the end of page 14.

Claims 1, 2 and 3 are rejected on Miller, June 20, 1905, 793,013, (181-3) or Simon, English patent, July 5, 1904, 15060, (181-3) figure 2. Any graphophone or gramophone of which the examiner is

778826—26

778-826——2

aware is a "direct sound regenerating machine" within the ordinary import of the terms used.

Claim 4 is objectionable as claiming the insulation, matter not shown on the drawing. See rule 50.

Claim 4 is rejected on any cabinet talking machine in view of Aiken, Sept. 5, 1911, 1,002,479, (181-9) or Hough, Eng- [fol. 101] lish patent, April 16, 1907, 8833 (181-2).

Claim 5, line 3 "compartment" should be compartments.

Claim 5 is rejected on Shanks, May 29, 1906, 822,024, (181-3), amet, June 23, 1896, 562,753, (181-7), Amet, June 23, 1896, 562,694, (181-7) Repp, Sept. 19, 1911, 1,003,655, (181-7) or Lumiere, Mar. 14, 1911, 986,477, (181-11), figure 7, mounted in any conventional cabinet as Skiff, Mar. 15, 1904, 754,508, (181-3), no invention being found in separating the record and diaphragm spaces by a partition, especially in view of Shields, June 12, 1900, 651,515, (181-2) or Welton, French patent, Feb. 1, 1906, 362,926, (181-3).

Claim 9 is rejected on Repp or Lumiere cited; also as met in terms in Dyer, Dec. 31, 1912, 1,049,215, (181-5), Pumphrey, May 14, 1912, 1,026,178, (181-3) or Macdonald, May 10, 1910, 957,694, (181-3).

Claim 11, line 5, and should follow "arm."

Claim 11 is rejected on Sheble et al., May 3, 1910, 957,004, (181-3), 15 and 10 being the two arms.

Claim 12 is rejected on Rosenthal, English patent, Nov. 17, 1909, 26738, (181-3).

Claim 15 is rejected on Kraemer, June 9, 1908, 890,142, (181-11).

Claim 16 is rejected on Kraemer; English, June 10, 1913, 1,064,062, (181-11); Edison, Feb. 22, 1910, 950,226, (181-10);

778826—27

[fol. 102] 778-826——3

Stroh, English patent, Feb. 16, 1901, 3393, (181-10); Brown, English patent, Jan. 16, 1911, 1157, (181-11) or Gaumont & Co, French patent, April 15, 1903, 331,226, (181-10).

Claim 17 is rejected on Kraemer. The size of the di-phragm is not a patentable limitation.

Claim 18 is rejected as not sufficiently distinguished from Kraemer.

Claims 19 and 20 are rejected on Gaumont in view of Kraemer. Note the dimensions of the diaphragm in figure 2 of Gaumont. No invention is found in providing Gaumont's device with a contact piece as at 16 in Kraemer.

Claim 21, line 6, "member" should be members.

Claim 22, line 3, "position" should be positions.

Claim 24, line 5, "lever" should be levers.

Claim 27 is rejected on Gleason, Aug. 11, 1908, 896,006, (181-11), figure 9, Johnson, Sept. 3, 1907, 865, 105, (181-11) figure 5, or Gleason, April 16, 1907, 850,883, (181-11).

Claim 28 is rejected on Simon, Rosenthal or Miller, no invention being displayed over these structures.

J. T. Newton, Ex.

L. H. S.

778,826—28

[fol. 103] Mail Room, Dec. 14, 1913, U. S. Patent Office.

U. S. Patent Office, Received Dec. 26, 1918, Division 23

11783

Div. 23, Paper No. 3

A

Div. 23, Room 379

Application of Marcus C. Hopkins. Sound Regenerating Machine. Filed July 14, 1913. No. 778,826

New York City, N. Y., Dec. 5, 1913.

To the Commissioner of Patents:—

Sir: Replying to the office action of September 9, 1913, please amend the above entitled case as follows:—

In the preamble, line 5, insert "a" after "in."

In Fig. 1 of the drawing, make "e'" "e''."

In Fig. 8 of the drawing, change "g'" to "g''."

At the end of page 14 insert:—

A[1]. "Having thus described my invention, what I claim and desire to secure by Letters Patent, is:—"

Insert commas in the following places on page 1: line 2, after "sounds"; line 5, before "as"; line 9, after "trumpet"; line 16, before "and"; line 17, before "and"; line 18, after "piece"; line 19, after "waves"; line 21, after "reproducer"; line 23, after "disturbances"; line 24, after "air"; line 26, after "losses"; line 28, after "action"; line [fol. 104] 29, after "tension"; and in the following places on page 2:—line 4, after "record"; line 5, after "air"; line 7, after "reproducer" and after "trumpet"; line 8, after "sounds"; line 10, after "making"; line 17, after "record"; line 19, after "transformer"; line 21, after "regenerator"; line 22, after "invention"; line 23, after "air";

line 25, after "record"; line 26, before "in"; line 27, after "waves"; line 28, after "air"; and on page 3, as follows;—

1 778826—29

11784

line 4, before "which"; line 6, after "sounds" and line 11, before "without."

Page 2, line 24, insert a semi-colon before "and."

Page 3, insert semi-colon after "air" in line 7 and after "function" in line 8.

Page 1, line 4, after "propagation" insert | "in free air, | from a record."

Page 1, line 5, cancel "in air from a record."

Page 1, line 7, cancel "which would not be propagated as sound."

Page 1, line 17, after "and" insert | "which." |

Page 1, line 18, after "dissipated" insert "in heat or."

Page 1, line 19, after "waves" insert | "of small volume | and high tension."

Page 1, lines 19 and 20, cancel "or in heat, as is at once apparent" and substitute | "at any considerable distance."

Page 1, lines 21 and 22, cancel "it would appear that."

Page 1, line 26, after "and" insert | "therefore." |

[fol. 105] Page 2, line 1, substitute | "having" | for "with."

Page 2, line 17, cancel "comparatively unknown" and substitute | "not obtained." |

Page 2, line 18, cancel "or" and substitute | "and without." |

Page 2, line 23, cancel "the." first occurrance, and substitute | "unconfined." |

Page 2, line 24, cancel "as such."

Page 2, line 25, change "vibration" to | "vibrations." |

Page 2, line 27, substitute "such a" for "a |proper,"| and insert |"as"| after "tension."

2 778826—30

11785

Page 2, last line, change "to" first occurrence, to |"in."|
Page 3, line 2, after "wear" insert |"of the record."|
Page 3, line 6, before "imparting" insert |"of."|

It is believed that the foregoing amendments elim-
A. inate the reasons for objection as to lack of clear-
ness and as to inaccuracy.

With reference as to what is meant on page 1 by "self sustaining sound waves," and by "high tension disturbances," it is pointed out that in ordinary phonographs or talking machines, a small diaphragm is mounted in a sound box containing a very small amount of confined air, and all of the energy of the record is projected against this small diaphragm, which is thus violently vibrated, thereby producing air disturbances of so high a tension, that these disturbances cannot, owing to the inertia of air, effect a move-
[fol. 106] ment of a sufficient volume of air to produce sound waves, which, after their production, will be self sustaining so as to carry to a considerable distance and produce sounds which correspond in character, timbre, volume and pitch to the original sounds which made the record, and which, therefore, are the original sounds regenerated.

Inasmuch as these high tension disturbances, which are produced by the small diaphragm in the confined air space of the sound box, cannot, owing to the inertia of air, produce sound waves of large area and of sufficiently low tension suitable for the sound conductivity of air, such sound waves will not be produced as correspond to the sounds which made the record. On the contrary, these high tension disturbances produced by the diaphragm will be squeaky, will have relatively high pitch, and will not be self sustaining so as to carry to any appreciable distance. It is for this

reason that the horn or trumpet is employed to effect a lateral control of these high tension disturbances, resist

3 778826—31

11786

their transformation into heat and convert them into waves of sufficiently low tension and large volume to enable them to overcome the inertia of the air and thereby become self sustained.

But the use of the horn or trumpet amplifies the distortions producer by the small diaphragm being so violently agitated, and introduces distortions due to vibrations set [fol. 107] up in the horn itself. The resultant sound waves are not true reproductions of the original sounds, but are the characteristic sounds known as "phonograph sounds."

In order to obtain faithful reproduction of the original sound waves, that is, to really regenerate the original sounds, applicant has provided a sound regenerating machine which dispenses with the employment of a horn or trumpet for transforming high tension disturbances into waves of lower tension, and in which the vibration of the stylus by the record are mechanically directly transmitted to a diaphragm which is free to vibrate in unconfined air, which has sufficient area to set in motion a large volume of air, which is sufficiently light and rigid to enable it to move in synchronism with the stylus, and the distance of vibration of which is sufficiently short to permit of a relatively slow movement appropriate for the sound conductivity of air, whereby the regenerated sounds will be self sustaining and will be accurate reproductions of the original sounds.

Applicant has thus produced a machine in which the sounds are regenerated directly from the record and in open and unconfined air, without the intervention of a sound box and its confined body of air, and without the intervention of any vibration transforming device, such as a horn or trumpet.

4 778826—32

11787

So far as applicant is aware the machine of this invention is the first which has ever been constructed which will accu-

rately regenerate the original sounds without distortion, [fol. 108] without squeaking, without accentuation of notes of certain pitch, without change in intonation and without any appreciable loss of energy, and which in fact will produce faithful reproductions of the original sounds.

With reference to the statement in lines 7 and 8 of page 8 that no wave motions are set up in the material of the cone portion of the diaphragm, it will be noted that the lower end of the rod V is rigidly secured to the cap M which is secured to the apex of the cone L. The vibrations which are imparted to the cone L through the rod V are mechanical movements which are transmitted directly from the stylus by the levers Q and R and the rods SS and S′. The cone L is therefore moved bodily to and fro and is not molecularly vibrated, the diaphragm not being under tension, as are the transmission rods just referred to. The examiner, of course, understands that the sides of a cone being straight, will not yield when a blow strikes the apex of the cone in the direction of the axis thereof. If the diaphragm were flat where it is connected to the rod V, there would be a local vibration set up in the immediate vicinity of the connecting rod, but a large part of the diaphragm would not be bodily moved, as is the case with the cone, and the resultant sounds would be very feeble, and would not compare in volume to the sounds which are produced by the cone of the applicant's machine. Applicant has demonstrated this practically by employing both flat and conical diaphragms.

[fol. 109]

11788

With reference to claims 1, 2 and 3 which have been rejected on the patent to Miller No. 793,013, or on the patent (British) to Simon, it will — noted that each of these devices has a small diaphragm located in a sound box provided with a horn and is not a direct sound regenerating machine, in which the regenerated sounds are effected without the intervention of a transforming trumpet or horn, as in applicant's structure.

With machines having sound boxes and horns, it is not material that the cabinet has apertures on all sides, as set forth in claim 1; nor whether it has no bottom as set forth

in claim 2. On the other hand it is of great importance that the cabinet, which contains a direct sound regenerating machine having a diaphragm which impresses its vibrations upon unconfined air, shall have an aperture leading to the surrounding atmosphere, as in claim 3; having no bottom as in claim 2, or having apertures on all sides serving for free path for the sound waves from the compartment containing the regenerator to the surrounding atmosphere, as in claim 1. In machines having sound boxes and horns it is only required that the horn communicate with the outside atmosphere.

The references do not disclose any direct sound regenerating machine mounted in a cabinet, so that it is believed that the patent to Aiken, No. 1,002,479, or the British patent to Hough, No. 8833, of 1907, which show insulation between a machine and a table, the machines being of the ordinary sound box type do not apply to claim 4, which [fol. 110] combines a direct sound regenerating machine with a cabinet in which the machine is mounted and from which it is insulated.

As to claim 5, the provision of a partition between the record table and the tympanum effects a variety of functions. It provides a support for the machine, serves as a

guard for the protection of the diaphragm, which in a machine of this character must be large, exposed to the open air and is liable to injury. At the same time it serves the commercial purpose of enabling a user of a *the* machine to readily put on or take off a record without danger of injury to any of the delicate parts. In the ordinary sound box machine the diaphragm is protected, is close to the record and requires no supporting and protecting partition. None of the references discloses a record table and transmission arm in one compartment and a tympanum located in the other compartment, as specified in claim 5. In the French to Welton, No. 362,926 and the patent to Shields, No. 651,515, cited to show a partition separating the record table and the diaphragm, the record on the diaphragm are both in the same chamber. In neither one of these devices is there any partition between the record table and the tym-

panum. All that these two devices show, with reference to a partition is a trumpet leading from one chamber to the outside thereof.

[fol. 111] Cancel "compartment" and substitute | "compartments," | in line 3 of claim 5. Insert a comma before "of" in line 2 of said claim.

Cancel claim 9.

Claim 10, line 1 insert a comma after "machine." Insert a comma after "support" in line 3.

Claim 11, insert a comma after "machine" line 1, and after "holder," line 2. Line 5 after "and," | insert A^2. adapted to carry a stylus, the support having. Same line, before "a tympanum" insert | "and." | Same line cancel "by" and substitute "at the free end of."

7 778826—35

11790

Claim 11, as amended, distinguishes from the patent to Sheble et al, cited, in being restricted to a direct sound regenerating machine, with the diaphragm carried at the free end of the second arm, while in the reference the diaphragm is carried at the junction between the arms and the machine is of the sound box type having a transforming horn.

The British patent to Rosenthal No. 26,738 is not a direct sound regenerating machine, as specified in claim 12 but is a sound box machine having a horn, which closes an opening in the bottom of the cabinet and the tympanum is not directed downwardly as in applicant's construction. In the reference the diaphragm is not free to vibrate in the open air and direct sound waves unrestricted and without transformation through an opening in the bottom of the cabinet.

[fol. 112] Each of the claims 15 to 20 inclusive is drawn to the combinations of elements therein set forth as combined in a sound regenerator for directly propagating self sustaining sound waves in air. Each of the devices of the references is an ordinary reproducer having a small diaphragm operating in a sound box having a small volume of confined air, and requiring, in order to set up self sustaining

waves, the intervention of a transforming device, such as a horn or trumpet, to change the high tension vibrations into lower tension waves of greater amplitude. No one of the diaphragms described and illustrated in the said references can be employed to directly propagate and regenerate the original sounds, but, the sounds produced therewith will be of high pitch and of so great a tension that the disturbances will not set up self sustaining waves in the air, for the reasons hereinbefore given.

For these reasons the references cited against claims 15 to 20 inclusive do not meet the claims. With reference to claims 17 which specifies a tympanum exceeding 9 inches in diameter, it is submitted that the size of the tympanum is what enables it to effect direct regeneration of the sound. When a horn is employed for transforming high tension disturbances, the size of the tympanum is immaterial. Applicant has practically demonstrated that, to effect direct regeneration from the record of the sounds, a light, vibratile [fol. 113] tympanum of substantially 9 inches in diameter or greater must be employed in order to obtain faithful reproductions. With respect to claim 15, there is no apex to the diaphragm of Kraemer, No. 890,142, the plate 16, Fig. 3, being secured to the flat central portion of the diaphragm, which is not a cone as in applicant's construction, but is a frustum of a cone with a flat top, which is considerably larger than the metal plate 16. With a diaphragm of this kind, the center will yield and produce local disturbances. Furthermore the conoidal portion of the Kraemer device, not terminating in an apex, and the plate 16 not reaching to the conoidal portion, said conoidal portion will not be moved bodily to the same extent as would be the case if the metal plate were secured to an apex, as in applicant's construction.

As has already been pointed out, the Kraemer device is a sound box employing a horn and cannot directly regenerate self sustaining sound waves without the employment of the trumpet, while claims 15 to 20 inclusive are drawn to a direct sound regenerator.

Claim 18 distinguishes from Kraemer in the same manner as does claim 15, the cap being secured to the apex of a cone, while in the Kraemer device the cap is secured to the flat top of the frustum of a cone, the top being of greater diameter than the cap.

Claims 15, 17, 18, 19 and 20 each distinguishes from Kraemer in the cap being secured to the apex of a cone. [fol. 114] The dimensions of the diaphragm and of the conical portion thereof, as set forth in claims 15 to 20 inclusive, are essential elements in a direct sound regenerator, but they are not essential in sound boxes which employ horns or trumpets as do all of the references which have been cited against these claims. This has been demonstrated by the applicant by actual trial.

For the foregoing reasons it is submitted that claims 15 to 20 inclusive are not met by the references.

Claim 16, line 2, change "og" to "of."

Claim 21, line 6, change "members" to | "members." |

Claim 22, line 3, change "position" to | "positions." |

Claim 24, line 5, change "lever" to | "levers." |

Claim 26, last line, change "tention" to | "tension." |

Claim 27 distinguishes from the references in being drawn to a structure having an untensioned diaphragm, while the devices of the references have tensioned diaphragms as set forth in lines 15 to 18, page 1 of the Gleason patent, No. 850,883. Claim 27 further distinguishes in the untensioned diaphragm being connected at the end of the tensioned transmission, while in the references the diaphragm is connected intermediate of the ends of the tensioned members.

In the Gleason and Johnson patents, the tension serves only to retain the knife edges seated, and the tension serves to resist the vibration of the stylus. In applicant's struc- [fol. 115] ture, the tension does not interfere at all with the free vibration of the stylus, but is in a direction parallel

with the direction of movement of the stylus. For this reason the tympanum is connected at one end of the ten-

10 778826—38

11793

sioned transmission, in applicant's structure, instead of intermediate of and at right angles to the direction of tension as in the devices of the references.

With reference to claim 28 rejected on Simon, Miller or Rosenthal, it will be noted, as was stated with reference to claims 1 to 3, that the references are all sound box machines which require horns to regenerate the sound waves, and in such structures it is not material whether or not the cabinet is bottomless and has apertures in all of its sides for affording free paths for sound waves to the surrounding atmosphere, as set forth in claim 28, but it is of importance in a direct sound regenerating machine, for the success of such a machine is dependent upon the free vibration of a large diaphragm in unconfined air.

Furthermore, none of the references is provided with a bottomless cabinet nor with apertures on all sides, as set forth in the claims. Simon's machine rests on a table or base, and is not provided with any cabinet. The cabinets of Rosenthal and Miller have no openings on all sides, and each has a bottom provided with an opening which is closed by a horn.

Relative to the criticism in con-ection with claim 4, that the drawings do not illustrate insulation between the re- [fol. 116] generator and the cabinet, attention is directed to Fig. 3, in which there is shown insulation i' between the regenerator and the cabinet.

For the foregoing reasons favorable reconsideration of the rejected claims is requested.

Change the ordinals of claim 10 and the claims following.

11 778826—39

11794

[Please add to the claims the following claims:]*

20.

[24, "29.]* In a sound regenerating machine, a tympanum, a vibration transmission tensioned in the direction

[*Words and figures enclosed in brackets erased in copy.]

of its vibration independently of the tympanum and connected therewith, and a style holder connected with said transmission."

21.

[25, "30."] In a sound regenerating machine, an untensioned tympanum, a vibration transmission tensioned in the direction of its vibration and connected with said tympanum, and a style holder connected with said transmission."

22.

[26, "31."] In a sound regenerating machine, a tympanum, an oscillatory transmission member connected therewith, a style holder for oscillating the transmission member, and means independent of the tympanum for tensioning the transmission member in the direction of its oscillatory movement."

23.

[27, "32."] In a sound regenerating machine, a tympanum, an oscillatory transmission member connected [fol. 117] therewith, a style holder for oscillating said member, and means independent of the tympanum for yielding imparting a tension to said member in the direction of its oscillatory movement."

24.

[28, "33."] In a sound regenerating machine, an untensioned tympanum, a transmission member connected therewith and adapted for oscillation, a style holder for oscillating said member, and means for imparting a tension to said member in the direction of its oscillatory movement."

[Cl. 25 follows]

"34. In a sound regenerating machine, a tympanum, an oscillatory transmission member connected therewith, a style holder for oscillating said member, and means for tensioning said member without affecting its freedom of movement."

Per B.

12 778826—40

11795

"35. In a sound regenerating machine, a style holder, a tympanum, and transmission means under tension connect-

---

[*Words and figures enclosed in brackets erased in copy.]

ing the style holder and tympanum, the freedom of movement of the style holder being unaffected by said tension."

"36. In a sound regenerating machine, an oscillatory style, a tympanum, and longitudinally rigid transmission and arranged to impart to the tympanum vibrations means connecting the style and tympanum / which have less length than the vibrations of the style."

[fol. 118] "37. In a sound regenerating machine, an oscillatory style, a tympanum, and tensioned trans-
A². mission means connecting the style and tympanum and arranged to impart vibrations to the tympanum which have less length than the vibrations of the style."

"38. In a sound regenerating machine, an oscillatory style, a tympanum, and tensioned transmission means connecting the style and tympanum and arranged to impart vibrations to the tympanum having less length than the vibrations of the style, the tension of the transmission being in the direction of its vibration."

25.

[39, 29.]* In a sound regenerating machine,
D⁴. a tympanum $\wedge_{D4}$ having a free area exceeding nine
Per F. inches in diameter and having a portion substantially eight-tenths of the diameter of said free area which is rigid in the direction of the axis of the tympanum."

26.

[30, "40."]* In a sound regenerating machine, a
D⁴. typanum $\wedge_{D4}$ having a free area exceeding nine inches in diameter and having a conical portion substantially eight-tenths of the diameter of said free area."

[fol. 119] 11796

27.

[31, "41."]* In a sound regenerating machine, a
D⁴. tympanum $\wedge_{D4}$ having a free area exceeding nine

[*Words and figures enclosed in brackets erased in copy.]

inches in diameter and having a conical portion substantially eight-tenths of the diameter of said free area, the altitude of said conical portion being substantially one-quarter of the diameter of its base."

"42. In a sound regenerating machine, an oscillatory style, a tympanum having a relatively rigid vibratory portion, and longitudinally rigid transmission means connecting the style and the rigid portion of the tympanum and arranged to impart vibrations thereto having less length than the vibrations of the style."

"43. In a sound regenerating machine, an os-
A². cillatory style, a tympanum having a conical vi-
bratory portion, and transmission means con-
Per B. necting the style with said conical portion and
arranged to impart thereto vibrations having less length than the vibrations of the style."

"44. In a sound regenerating machine, a style holder, a tympanum having a relatively rigid vibratory portion, and a tensional transmission connecting the style holder with said rigid portion, the freedom of movement of the style holder being unaffected by the tension of the transmission."

"45. In a sound regenerating machine, a style holder, a tympanum having a conical vibratory portion, and a tensioned transmission connecting the style holder and said [fol. 120] conical portion, the freedom of movement of the style holder being unaffected by the tension of the transmission."

[Matter enclosed between rules erased in copy.]

25.

[28, 32, "46."]* In a sound regenerating machine, a style holder, a tympanum having a rigid vibratory portion, and a tensioned transmission connecting the style holder with said rigid portion, the tension of said transmission being in the direction of its vibration and independent of the tympanum."

[*Words and figures enclosed in brackets erased in copy.]

[Cl. 26 follows.]

14 778826—42

11797

"47. In a sound regenerating machine, a style holder, a tympanum having a conical vibratory portion, and a tensioned transmission connecting the style holder with said conical portion, the tension of said transmission being in the direction of its vibration."

"48. In a sound regenerating machine, a style holder, an untensioned tympanum having a rigid vibratory portion, and a tensioned transmission connecting the style holder with said rigid portion."

A^2. "49. In a sound regenerating machine, a style holder, an untensioned tympanum having a conical vibratory portion, and a tensioned transmission connecting the style holder with said conical portion."

Per B. "50. In a sound regenerating machine, a style, a tympanum, and longitudinally rigid transmission means connecting the style and tympanum and having means for imparting vibrations to the tympanum having no greater length than the vibrations [fol. 121] of the style."

"51. In a sound regenerating machine, a style, a tympanum, and tensioned transmission means connecting the style and tympanum and having means for imparting vibrations to the tympanum having no greater length than the vibrations of the style."

"52. In a sound regenerating machine, a style, a tympanum, and tensioned transmission means connecting the style and tympanum and having means for imparting vibrations to the tympanum having no greater length than the vibrations of the style, the tension of said transmission being independent of te tympanum."

---

15 778826—43

11798

"53. In a sound regeneratng machine, a style, a tympanum, and tensioned transmission means connecting the

style and tympanum, and having means for imparting vibrations to the tympanum having no greater length than the vibrations of the style, the tension of said transmission being independent of the typmpanum."

[Matter enclosed between rules erased in copy.]

26.

[29 33 "54.]* In a sound regenerating machine, a style, a tympanum, and tensioned transmission means connecting the style and tympanum and having means for imparting vibrations to the tympanum having no greater length than the vibrations of the style, the tension of said transmission being in the direction of its vibra-

A[23]. [fol. 122] tions and independent of the tympanum."

[Cl. 27 follows.]

"55. In a sound regenerating machine, a style, an untensioned tympanum, and transmission means connecting the style and tympanum and having means for imparting vibrations to the tympanum having no greater length than the vibrations of the style."

"56. In a sound regenerating machine, a style, an untensioned tympanum, and tensioned transmission means connecting the style and tympanum and having means for imparting vibrations to the tympanum having

Per. B. no greater length than the vibrations of the style."

"57. In a sound regenerating machine, a tympanum having a conical vibratory portion adapted to be vibrated from a record, the tympanum having a vibratile area of sufficient size to effect, without amplification, the regeneration from the record of sound waves of relatively large volume and carrying power."

"58. In a sound regenerating machine, a style, a tympanum and longitudinally rigid transmission means connecting the style and tympanum and having means for im-

parting vibrations to the tympanum having no greater length than the vibrations of the style, the tympanum hav-

---

[*Words and figures enclosed in brackets erased in copy.]

ing a vibratile area of sufficient size to effect, without am-
[fol. 123] plification, the regeneration of sound waves of relatively large volume and carrying power."

"59. In a sound regenerating machine, a style, a tympanum, and longitudinally rigid transmission means connecting the style and tympanum and having means for imparting vibrations to the tympanum having less
A². length than the vibrations of the style, the tympanum having a vibratile area of sufficient size to effect, without amplification, the regeneration of sound waves of relatively large volume and carrying power."

"60. In a sound regenerating machine, a tympanum having a rigid vibratory portion adapted to be vibrated from a record, the tympanum having a vibratile area of sufficient size to effect, without amplification, the regeneration from the record of sound waves of relatively large volume and carrying power, and longitudinally rigid means connected with said rigid portion for transmitting thereto vibrations of a style."

"61. In a sound regenerating machine, a tympanum having a conical vibratory portion adapted to be vibrated from a record by a style, the tympanum having a vibratile area of sufficient size to effect, without amplification, the regeneration from the record of sound waves of relatively large volume and carrying power, and transmitting means connected with said conical portion and adapted to be actuated by a style."

17 778826—45

11800

[fol. 124] "62. In a sound regenerating machine, a tympanum having a vibratile area of sufficient size to effect, without amplification, the regeneration from a record of sound waves of relatively large volume and carrying power, and tensioned vibration transmitting means connected to the tympanum and adapted to be actuated by a style, the tension thereof not extending to the tympanum."

[Matter enclosed between rules erased in copy.]

27.

[30 34 "63."]* In a sound regenerating machine, a tympanum having a vibratile area of sufficient size to effect,

---

[*Words and figures enclosed in brackets erased in copy.]

without amplification, the regeneration from a record
A². of sound waves of relatively large volume and carrying power, and tensioned vibration transmitting means connected to the tympanum and adapted to be actuated by a style, the tension of the transmission being in the direction of its vibration and not extending to the tympanum."

Insert B⁶.
Cl. 28.

"64. In a sound regenerating machine, a tympanum having a rigid vibratory portion, the tympanum having a vibratile area of sufficient size to effect, without amplification, the regeneration from a record of sound waves of relatively large volume and carrying power,
Sub. B⁶. and tensioned vibration transmitting means connected to said rigid portion and adapted to be actuated by a style, the tension thereof not extending to the tympanum."

"65. In a sound regenerating machine, a tympanum having a conical vibratory portion and having a vibratile area of sufficient size to effect, without amplification, the regeneration from a record of sound waves of relatively large [fol. 125] volume and carrying power, and tensioned vibration transmitting means connected to said conical portion and adapted to be actuated by a style."

"66. In a sound regenerating machine, a style holder having an axis which, when the style carrier thereby is in operative contact with the record, is substantially perpendicular to the record."

"67. In a sound regenerating machine, a style holder having an axis which, when the style carried thereby is in operative contact with the record, is substantially perpendicular to the record, the style holder having means for holding the style at an inclination to the axis."

[Matter enclosed between rules erased in copy.]

Claims 29 to 33 and 38, 46, 47, 52, 54 and 63 distinguish from the references in the tension of the transmission being in the direction of the vibration thereof. By this construction the freedom of movement of the transmission by the style is not affected. In the devices of the Gleason and Johnson, cited as showing tensioned transmission, the tension is in a direction transverse to the vibrations of the style. It will be understood that in such constructions the tension of the transmission resists free movement of the style.

Claims 34, 35, 44, 45, 46 and inclusive distinguish from the references in the feature of the tension of the transmis- [fol. 126] sion means not interfering with the free movement of the style. As above stated, the tension of the Gleason and Johnson devices does not interfere with the free movement of the style.

Claims 30, 33, 48 49, and 56 distinguish from the references in the combination with a tension transmission of an untensioned tympanum. In the references having tensioned transmission, the tympanum is tensioned thereby.

Claims 31, 32, 46, 53, 54, 62, 63 and 64 distinguish from the references in the tensioned transmission which does not extend to the tympanum. This is also true of claim 29.

Claims 36, 37, 38, 42, 43 distinguish from the references in the arrangement by which the tympanum has a less length of vibration than the style. In the references the leverage is the other way, the style holder being pivoted with the style at the shorter end of the lever, whereby the length of vibration of the diaphragm is greater than the length of

vibration of the style. This makes great wear on the record and distorts the sound waves.

With small diaphragms, such as are used in sound boxes, a large amount of vibration is imparted to the diaphragm to compensate for the small amount of air moved. Such a large movement of the diaphragm produces high tension disturbances due to the rapid movement of the diaphragm in its traveling the distance which it is required to travel

during each vibration. The inertia of the air prevents its partaking bodily of these high tension disturbances, so it [fol. 127] becomes necessary to confine them and transform them, by means of a trumpet, into waves of less tension and larger volume to which the air can respond and thereby produce waves of large volume and carrying power and which are self-sustaining.

Applicant eliminates the production of high tension disturbances which require transformation by a horn, and employs a diaphragm having a vibratile area of sufficient size and small range of movement to effect, when vibrated, the regeneration directly, without amplification, and without the use of a horn or sound box, waves which are self-sustaining by reason of their large volume and carrying power. The employment of a large diaphragm moved but a small distance in each vibration reduces the distortions, and permits the style to exert great leverage in vibrating the diaphragm, thereby reducing the wear on the record.

What is meant by "high tension disturbances" may be illustrated as follows: If a paddle be moved flatwise rapidly back and forth in water, at a rate of speed such that the inertia of the water will not permit it to respond, only violent local disturbances will be produced which will not carry to any considerable distance. On the other hand, if the paddle be larger and of considerable area and be moved

back and forth slowly enough for the water to respond, waves of large volume and carrying power will be produced. These two instances, of the use of the small paddle moved [fol. 128] rapidly to and fro for a considerable distance and thereby producing only local disturbances, not capable of generating waves of large volume and carrying power; and the use of a large paddle moved a less distance in the same length of time, and therefore more slowly, and generating waves of large volume and great carrying power, are analogous respectively to the small violently agitated diaphragm of the ordinary sound box and horn phonograph, and applicant's structure, which employs a large relatively slow moving and slightly vibrated diaphragm, which vi-

brates in unconfined air, thus generating sound waves which are "self-sustaining," and which eliminates the sound box and horn and the distortions which accompany their use.

Claims 50 to 56 inclusive and 58, 59 and 60 distinguish from the references in the transmission means which imparts vibrations to the tympanum of no greater length than the vibrations of the style.

Claims 39, 40, 41, 57, 61 and 65 distingunsh from the references in the conical tympanum having a vibratile area of sufficient size to effect, without amplification, the regeneration from the record of sound waves of large volume and carrying power. Each of the references having a conical diaphragm, is of the sound box type having a small tympanum with a range of vibrations greater than that of the stylus and which requires a sound box and horn to transform the high tension disturbances produced into waves to which the air can respond.

Claims 36, 42, 50, 58, 59 and 60 distinguish from the references in the transmission means being longitudinally rigid. This feature is of great importance in direct sound regenerating machines, where the reduction in length of vibration of the tympanum, relative to the stylus, is effected, as specified in the first five of these claims. By having a longitudinally rigid transmission, the vibrations from the style are transmitted to the diaphragm without loss by means of loose joints or by absorption, as would occur with a longitudinally flexible transmission.

Claims 66 and 67 distinguish from the references in the axis of the style holder being substantially perpendicular to the record, when the style is in the operative position on the record. In the references, the axes are either parallel with the surface of the record, or disposed at an inclination thereto. By having the axis substantially perpendicular, the style travels in a plane transversely in the record groove, which is the proper movement, instead of moving in a curve transversely in the record, as it does in the devices of the references.

For the foregoing reasons favorable reconsideration of the rejected claims, and favorable consideration of the new claims is requested.

Annexed hereto find supplemental oath.

Respectfully submitted.

Pennie, Davis & Goldsborough, Attorneys for Marcus C. Hopkins.

23 778826—51

[fol. 130] 11806

Supplemental Oath

STATE OF NEW YORK,
County of New York, ss:

Marcus C. Hopkins, whose application for letters patent for an improvement in Sound Regenerating Machines, serial number 778,826, was filed in the United States Patent Office on or about the 14th day of July, 1913, being duly sworn, deposes and says that the subject matter of the foregoing amendment was part of his invention, was invented before he filed his original application, above identified, for such invention, was not known or used before his invention, was not patented or described in a printed publication in any country more than two years before his application, was not patented in a foreign country on an application filed more than twelve months before his application, was not in public use or on sale in this country for more than two years before the date of his application, and has not been abandoned.

Marcus C. Hopkins.

Subscribed to and sworn before me this 22 day of December, 1913. M. A. Bill, Notary Public for and in Kings County, New York. Certificate filed in N. Y. Co. Notary No. 48.

778826—52

[fol. 131] 2—26

Div. 23, Room 379

Paper No. 4

Address only "The Commissioner of Patents, Washington, D. C.," and not any official by name.

All communications respecting this application should give the serial number, date of filing, title of invention, and name of the applicant.

LCE—Su.

Department of the Interior, United States Patent Office, Washington

Feb. 7, 1914. U. S. Patent Office. Feb. 7, 1914, Mailed.

Pennie, Davis and Goldsborough, 35 Nassau Street, New York, N. Y.:

Please find below a communication from the Examiner in charge of the application of Marcus C. Hopkins, for Sound Regenerating Machine, filed July 14, 1913, Serial No. 778,826.

Thomas Ewing, Commissioner of Patents.

In response to amendment of Dec. 24, 1913.

"e" " has been changed on Fig. 1 to e"', instead of as directed on page 1 of the above noted amendment.

Page 1, lines 15 and 16, "the —— air" is objected to as not true as broadly as stated, for the reasons of record. What authority has applicant for the use of "high tension" and "low tension" in connection with sound waves?

[fol. 132] Claim 1 is rejected on Miller or Simon of record for the reasons of record, as not distinguishing therefrom. "Direct sound regenerating machine" is held to be too vague and indefinite to distinguish from the ordinary talking machine which is broadly such a machine. Nor is invention found in mounting Lumiere of record in a cabinet with provision for sound outlet on all sides, if such is desired.

Claim 2 is rejected on the references and the reasons of record; also as involving no invention in mounting Lumiere is a bottomless cabinet.

Claim 3 is rejected on the references and reasons of record; and also on Lumiere mounted in any conventional cabinet as Skiff et al., of record.

Claims 4 and 5 are rejected on the references for the reasons of record.

778826—53

Claim 6 is rejected as specifying only.

Johnson, 1,015,321, Jan. 23, 1912, (181-3), note 12, with the end partition extended to separate the record compartment from a sound conduit compartment, as in Shields or Welton of record, or in

German patent, 220,412, Mar. 26, 1910, (181-3).

Claim 7 is rejected as specifying no more than the device in

Persichetti, French patent, 397,609, May 13, 1909, (181-3), with a diaphragm at the mouth of the horn, as in

Szek et al., English patent, 8,011, Apr. 3, 1906, (181-27).

Claims 8 and 9 are rejected on Persichetti and Szek, no [fol. 133] invention being found in flaring the mouth of the horn in the former as in the latter.

Claim 10 is objectionable in that it is not positively expressed that the second arm has a free end. Claim 10 is rejected on Johnson above cited. 4 and 7 are the two arms. It is patentably immaterial whether 12 is carried by 7 or 8.

Claim 11 is rejected on Rosenthal of record.

Claims 12 and 13 are allowed.

Claim 14 is rejected as no invention is found in interposing any of the common non-vibratile members employed in this art between the diaphragm and stylus bar as in

Kraemer, 885,490, Apr. 21, 1908, (181—11),
Montgomery, 652,800, July 3, 1900, (181—11),
Hill, 668,183, Feb. 19, 1901, (181—10), or
Berliner, 534,543, Feb. 19, 1895, (181—3)

between the diaphragm and stylus bar of any such structures as in Gaumont, English, Edison, Browne, or Stroh, all of record.

Claim 15 is rejected on the references and for the reasons of record.

Claim 16 is rejected on the references and reasons of rejection of claim 14. The size of the diaphragm is held not a patentable limitation. Note, however, that Lumiere discloses a diaphragm exceeding nine inches in diameter.

Claims 17, 18 and 19 are rejected upon Gaumont of record, in connection with the considerations above given.

[fol. 134] Claims 20 to 25 inclusive are allowed.

Claim 26 is rejected on the references of record. As the tension means acts in the plane of the bar and in the direction of the fulcrum, it is believed it will not tension the diaphragm in these several structures. This claim is also rejected on English, 940,795, Nov. 23, 1909 (181—11), note spring 22.

Claim 27 is rejected on the references of record and also on the additional grounds of rejection of claims 1 and 2.

Claim 28, line 5, "angle" should be —angled—. This claim is otherwise allowable.

Claims 29 to 33 inclusive, 46, 54, and 63 are allowable, as at present advised.

Claims 34, 35, 44 and 45 are objectionable as inaccurately descriptive in the statement that the freedom of movement of the style holder is unaffected by the tension of the transmission. The friction of the moving parts will obviously be increased with the pressure.

Claims 34, 35 and 44 are rejected on the grounds of rejection of claim 26.

Claims 36 and 55 are rejected on any of the following references:

Edison, 703,774, July 1, 1902, (181-10),
Betzold, 633,226, Sept. 19, 1899, (181-11),
Jones, 750,460, Jan. 26, 1904, (181-11), Figs. 1 to 3,
Schwartz, 875,853, Jan. 7, 1908, (181-11), or
German patent, 183,685, Apr. 25, 1907, (181-11)

Claims 37, 51, 53 and 56 are rejected on the references last cited in view of the references cited against claim 26.

[fol. 135] Claim 38 is rejected as no invention is found in tensioning the transmission in any of the references cited against claim 36, in view of the cited art. Thus no invention is found in tensioning Jones' stylus bar as in Berens, 890,754, June 16, 1908 (181—11).

778826—55

778,826—4

Claim 39, 40 and 41 are rejected on Gaumont or English, 1,064,062, in view of Lumiere, the selection of the particular dimensions being held not a matter of invention in the absence of a showing of novel results arising from the par-

ticular dimensions and such as could not be obtained by the ratio of dimensions of the references.

Claims 42 and 43 are rejected on Gaumont or English last cited in view of the references cited against claim 36.

Claim 45 is rejected on any of the references cited against claim 26 in view of any conical diaphragm in the art.

Claim 47 is rejected on any conical diaphragm as in Gaumont or English, 1,064,062, in view of any such tension means as in Berens.

Claims 48 and 49 are rejected on any conical diaphragm mounted in the references cited against claim 26.

Claim 50 is rejected on any of the references cited against claim 36 or Edison, 705,829, July 29, 1902 (181—11).

[fol. 136] Claim 52 is rejected on any of the references cited against claim 36, in view of any such tension means as in Berens.

Claim 57 is rejected on Lumiere; also on any conical diaphragm cited in view of Lumiere.

Claim 58 is rejected on the grounds of rejection of claim 57, the longitudinally rigid transmission means being the common form in this art, as in references cited, and no invention being found in actuating any of the cited diaphragms by such means.

Claim 59 is rejected on the references and the reasons last given, no invention lying in using a reducing lever in view of the art cited against claim 36.

Claim 60 is rejected on any conical diaphragm as English, 1,064,062, in view of Lumiere.

Claim 61 is rejected on the grounds given against claim 57.

Claim 62 is rejected on Lumiere in view of any of the references against claim 26.

778826—56

778,826—5

Claims 64 is rejected on the grounds of rejection of claim 60 in view of any of the references cited against claim 26.

Claim 65 is rejected on the grounds of rejection of claim 64, or on the grounds of rejection of claim 60, in view of any of the tensioning means cited.

Claims 66 and 67 are rejected on

Shue, 842,028, Jan. 22, 1907, (181-11),
English, 1,001,004, Aug. 22, 1911, (181-11), or
Lyons, English patent, 15,675, June 29, 1910, (181-11).

[fol. 137] The claims in this case are many times too numerous for the scope of applicant's invention, and should be reduced to not over twenty.

W. D. Groesbeck, Exr.

L. H. S.

778826—57

11807

#5

Div. 23

"B"

Div. 23—Room 379

United States Patent Office

Application of Marcus C. Hopkins. Filed July 14, 1913. Serial No. 778,826. Sound Regenerating Machine

New York, February 5, 1915.

The Honorable Commissioner of Patents, Washington, D. C.

SIR: In response to Office Action of February 7th, 1914, please amend as follows:

On page 1 of the specification, line 5, after "waves" insert—substantially corresponding to the original
B[1]. recorded sounds in intensity or amplitude as well as in pitch and timbre,—; lines 11 and 12, cancel "self-sustaining" and substitute—such regenerated. Lines 15 and and 16 cancel "self-sustaining" and substitute—such—. [fol. 138] In line 19 strike out the amendment inserted after the word "waves," and which reads "of small volume and high tension." In line 23 cancel "high tension" and substitute—relatively violent—. In line 25, after "conducting" insert—such—and after "disturbances" strike out "of such tension." In the last line strike out "tension" and substitute—violence of the disturbances—.

On page 2, in line 1, change "tension" to—movement—. Cancel the last two lines of page 2, and the first two
B[2]. lines of page 3, and substitute—directly in the free air surrounding it sound waves of an intensity or

amplitude substantially corresponding to the original recorded sound waves. In other words, the original sounds

778826—58

11808

are directly regenerated by the vibrating tympanum without the interposition of a restrictive or sound modifying transformer.

On page 6, in the last line, after "portion" insert—or supporting rim—.

B³. On page 7, in line 7, strike out "called for by the correla," and strike out lines 8, 9 and 10, and line 11 through the period, and substitute—/which are required to regenerate the sound waves in the manner above described.

On page 8 in the last line, change the comma before "but" [fol. 139] to a period, and strike out the remainder of the line, and the first five lines and line 6, through the period, on page 9.

On page 9, in line 15; strike out "It is prob-" and strike out lines 16 to 28 inclusive, constituting the remainder of the paragraph.

Cancel claims 1 to 4, inclusive, and substitute therefor the following:

1. In a machine for directly regenerating
C¹. G². sound from a record of the same ∧, a vibra-
[C¹]*
Insert D¹. tile conical tympanum ∧, and a mechanical
[D¹]*
B⁴. transmission through which the vibrations produced by the record are transmitted to the tympanum, the tympanum being of sufficient area to impart to the surrounding free air, when the tympanum is so vibrated, sound waves substantially corresponding in intensity to the recorded sound waves; substantially as described.

[*Words and figures enclosed in brackets erased in copy.]

2. In a machine for directly regenerating
C^1. sound from a record of the same $_\wedge$, a vibra-
Insert G^x. [C^1]*
D^1. tile conical tympanum $_\wedge$, a mechanical trans-
[D^1]*
mission through which the vibrations produced by the record are transmitted to the tympanum, the tympanum being of sufficient area to impart to the surrounding free air, when the tympanum is so vibrated, sound waves substantially

corresponding in intensity to the recorded sound waves, [fol. 140] and an open-work cabinet inclosing the tympanum but affording substantially free access of the surrounding air thereto; substantially as described.

Change the number of claims 5, 6, 7, 8, 9, and 10 to 3, 4, 5, 6, 7 and 8, respectively. Cancel claim 11 and change the numbers of claims 12 and 13 to 9 and 10.

In claim 8 old claim 10, in line 5, after "arm" insert—having a free end—.

Cancel claims 14 to 19, inclusive, and substitute therefor the following:

7. [11.]* In a machine for directly regenerat-
D. G^x. ing sound from a record of the same $_\wedge$, a tym-
C^1. [C^1]*
panum support having a circular aperture, a
of long area
B^5. light vibratile tympanum $_\wedge$ having its outer
rigidly
edge $_\wedge$ mounted in said support, said tympanum being shaped to provide an annular sustaining rim adjacent said support, and a conical portion springing from the inner edge of said annular rim, a cap of non-vibratile material rigidly secured to the apex of said conical portion of said tympanum, and a mechanical transmission through which the vibrations produced by the record are transmitted

---

[*Words and figures enclosed in brackets erased in copy.]

to the tympanum, the tympanum being of sufficient area to impart to the surrounding free air, when the tympanum is so vibrated, sound waves substantially corresponding in intensity to the recorded sound waves; substantially as described.

[fol. 141] 8. [12].* In a machine for directing " G^x. regenerating sound from a record of the same $\wedge$, D. [C^1]*

a ponderous tympanum support having a circular of long area

D^2. aperture, a light tympanum $\wedge\wedge$ mounted upon said D2

support in said aperture, said tympanum having a central conical portion, the base of which exceeds in area one half the effective area of the said tympanum and

3 778826—60

11810

a mechanical transmission through which the vibrations produced by the record are transmitted to the tympanum, the tympanum being of sufficient area to impart to the surrounding free air; when the tympanum is so vibrated, sound waves substantially corresponding in intensity to the recorded sound waves; substantially as described.

" 9. [13.]* In a machine for directly regenerat-

C^1 G^x. ing sound from a record of the same $\wedge$, a ponder- [C^1]*

ous tympanum support having a circular aperture, a light vibratile tympanum exceeding nine inches in diameter, rigidly

D. having its outer edge $\wedge$ mounted on said support, said tympanum being shaped to provide an annular rim adjacent said support, and a conical portion springing from the inner edge of said annular rim, a cap of non-vibratile material rigidly secured to the apex of said conical portion of said tympanum, and a mechanical transmission through [fol. 142] which the vibrations produced by the record are transmitted to the tympanum, whereby the tympanum imparts to the surrounding free air sound waves substantially corresponding in intensity to the recorded sound waves; substantially as described.

[*Words and figures enclosed in brackets erased in copy.]

10. [14.]* In a machine for directly regenerat-
G^x " ing sound from a record of the same ∧, a ponderous
[C^1]*
support exceeding nine inches in diameter
tympanum ∧ having a circular aperture ∧, a light vibratile tympanum mounted in said aperture and having its outer
rigidly
" edge ∧ secured upon said support, said tympanum being shaped to provide an annular rim adjacent said support, and a conical portion springing from the inner edge of said annular rim, the diameter of the base of said conical portion being not less than eight-tenths of the diameter of the said circular aperture in said support, a cap of non-vibratile material rigidly secured to the apex of said conical portion of said tympanum, and a mechanical transmission through which the

vibrations produced by the record are transmitted to the tympanum, the tympanum being of sufficient area to impart to the surrounding free air, when the tympanum is so vibrated, sound waves substantially corresponding in intensity to the recorded sound waves; substantially as described.

[fol. 143] 11. [15.]* In a machine for directly
G^x C^1. regenerating sound from a record of the same ∧,
[C^1]*
a ponderous tympanum support having a circu-
of long area
D. lar aperture, a light vibratile tympanum ∧
mounted in said aperture, and having its outer
rigidly
edge ∧ secured to said support, said tympanum
D^3. being shaped to provide ∧ [an annular rim ad-
Insert G^1.
jacent said support.]* ∧ [and a conical por]* tion
[D^3]*
springing from the inner edge of said annular rim, the altitude of said conical portion being substantially one fourth

[*Words and figures enclosed in brackets erased in copy.]

of the diameter of its base, a cap of non-vibratile material rigidly secured to the apex of said conical portion of said tympanum, and a mechanical transmission through which the vibrations produced by the record are transmitted to the tympanum, the tympanum being of sufficient area to impart to the surrounding free air, when the tympanum is so vibrated, sound waves substantially corresponding in intensity to the recorded sound waves; substantially as described.

12. [16.]* In a machine for directly regenerating sound from a record of the same ∧, a ponderous [C¹]* tympanum support having a circular aperture exceeding nine inches in diameter, a light vibratile tympanum mounted rigidly in said aperture, and having its outer edge ∧ secured to said support, said tympanum being shaped to provide an annular rim adjacent said support, and a conical portion [fol. 144] springing from the inner edge of said annular rim, the diameter of the base of said conical portion being not less than eight-tenths of the diameter of said

G^x "

circular aperture in said support, and the altitude of said conical portion being substantially one quarter of the diammeter of its base, a cap of non-vibratile material rigidly secured to the apex of said conical portion of said tympanum, and a mechanical transmission through which the vibrations produced by the record are transmitted to the tympanum, whereby the tympanum imparts to the surrounding free air sound waves substantially corresponding in intensity to the recorded sound waves; substantially as described.

[Cl. 13 follows—see fol. 11778]

Change the numbers of allowed claims 20, 21, 22, 23, 24 and 25 to 17, 18, 19, 20, 21 and 22 respectively.

Cancel claims 26 and 27. Change the number of claim 28 to 23, and in line 5 change "angle" to —angled—.

[*Words and figures enclosed in brackets erased in copy.]

Change the numbers of allowed claims 29, 30, 31, 32 and 33 to 24, 25, 26, 27 and 28.

Cancel claims 34, 35, 36, 37 and 38. Change the numbers of claims 39, 40 and 41 to 29, 30 and 31. Cancel claims 42, 43, 44 and 45. Change the number of allowed claim 46 to [fol. 145] 32. Cancel claims 47 to 53 inclusive. Change the number of allowed claim 54 to 33.

Cancel claims 55 to 62 inclusive. Change the number of allowed claim 63 to 34. Cancel the remaining claims and substitute:

28. [31—35.]* In a sound regenerating machine, a
B[a]. tensioned vibration transmission, a style-holder upon one of said transmission and an untensioned tympanum connected with the opposite end of said transmission, the tension of the transmission being in the direction of its vibration; substantially as described.

Insert F4

[Cls. 29 to 31]

6 778826—63

11813

Remarks

The specification has been amended, and many of the claims have been cancelled, without prejudice, to reduce the number of claims, in deference to the Examiner's suggestion. Other claims have been redrawn to express more clearly the essential novelty of applicant's invention.

New claims 1 and 2 will, perhaps, bear upon their faces the distinguishments relied upon, but they will hereinafter be discussed in connection with the redrawn claims numbered 11 to 16.

Reconsideration of claims now numbered 3 to 8, inclusive, is respectfully requested.

Claim 3 is rejected on Shanks and Amet, No. 562, 753 and No. 562,694; Rep. No. 1,003,655, and Lumiere, in view of [fol. 146] Skiff, Shields and Weeton. We do not find in any one of these patents a cabinet having two compartments, one of which contains a record tablet and the other a tym-

[*Words and figures enclosed in brackets erased in copy.]

panum with a transmission arm extending from one compartment to the other. We are at a loss to understand why the Examiner says there is no invention in this arrangement. As pointed out, the cabinet, having a partition between the record tablet and the tympanum, effects a variety of functions, which are enumerated in the argument filed December 24, 1913. In the absence of such a construction in the prior art, we respectfully submit that the claims should be allowed.

Claim 4 contains the limitation that the transmission arm swings on one side of the partition and the tympanum is mounted upon the transmission arm and swings upon the other side of the partition. We do not understand how the patent to Johnson has any bearing upon this claim. Where

is the partition upon which the transmission arm is supported and through which it extends? In the German patent the tympanum, which is in the small reproducer, is immediately above the record tablet, and we do not see any partition through which the transmission arm extends, or, indeed, any transmission arm at all.

With respect to claim 5, we do not see that Persichetti shows any partition at all, much less a transmission arm extending downwardly through such a partition and carry- [fol. 147] ing a tympanum there beneath, and the same remark applies to Szek British patent.

With respect to claims 6 and 7, we ask for further application of the references or an allowance. We do not understand what relation the flaring of the mouth of the horn in Persichetti would have to these claims, which call for a particular cabinet structure and arrangement, including a transmission arm swinging over the record support and a tympanum carried by the arm and extending under the record support. So far as we can see the references cited against this group of claims have no relation to the invention herein disclosed. The differences are so great that there can be no objection to defining them but it seems to us that they are defined in the claims as now presented.

Claim 8 falls with the group just discussed, and the Examiner is asked to specifically apply the Johnson reference.

We respectfully solicit a careful consideration of the new claims 11 to 16 inclusive, which have been redrawn, following somewhat the form of new claims 1 and 2, to define a tympanum of such area as to produce directly regenerated sound waves substantially corresponding in intensity or amplitude to the recorded sound waves. That is to say, a

tympanum adapted to regenerate by its own movements when vibrated by the record, the original sounds, without [fol. 148] the interposition of any horn or other confining transformer. The Examiner will recognize, we believe, that such a tympanum has long been sought for by those most skilled in the art, and this is evidenced by the patents cited, such as Shanks, Amet and Lumiere. Those patented devices were certainly failures, and, so far as we are aware, no one before the present applicant succeeded in producing such a tympanum. That the applicant has fully succeeded we can prove by the Examiner by demonstration, if he so desires. It is suggested that size is not a patentable limitation, and that in any case Lumiere disclosed a diaphragm more than nine inches in diameter. The fact is that the problem which the applicant endeavored to solve does not exist until the tympanum is made of very large diameter, that is, of diameter large enough to regenerate the original sounds. When work is attempted on such a large diameter it is found that the diaphragm vibrates at different rates and different intensities in different parts, so that it is divided into nodes of great activity, alternating with portions of little or no activity. Lumiere encountered this difficulty and attempted to solve the problem by the structure disclosed in his patent No. 986,477. We believe it can easily be proved that that attempt was a failure. The Lumiere patent belongs to the Victor Talking Machine Company, but that Company has never put upon the market any machines embodying the invention. However that may be, the applicant's claims are carefully distinguished from Lumiere, which is not cited directly as a reference against [fol. 149] them. In our opinion the suggestion that there is

no invention in the form of regenerating tympanum devised by the applicant, is entirely refuted by the Lumiere patent. If the small reproducer diaphragms of conical shape were in themselves sufficient to show those skilled in the art that the difficulties encountered by Lumiere could be overcome by adopting the form adopted by the applicant, then Lumiere would have adopted that form. The fact is that the applicant has succeeded where others, and those most skilled in the art, have failed, and under those circumstances deductions which might otherwise be drawn from the earlier different, but now suggestive, patented structures, are overcome by the historical fact. We do not believe that the Examiner is justified in rejecting the applicant's tympanum claims unless he can find in the prior art a structure which in itself corresponds to those claims.

With respect to old claims 29, 40 and 41, now numbered 29, 30 and 31, we ask the Examiner to take into consideration the foregoing remarks. We believe that it will now be apparent to the Examiner that the selection of the particular dimensions is of the essence of the invention and attains novel results arising from the particular dimensions and such as could not be obtained by the devices shown in the references. If the Examiner desires to hear the results, we can arrange to make a demonstration for him here in New York, paying his traveling expenses for that purpose, or perhaps we can arrange to have one of the [fol. 150] machines taken to the Patent Office.

An early and favorable reconsideration is respectfully solicited.

Pennie, Davis & Goldsborough, Attorneys for Applicant.

2—269

Div. 23—Room 379

Paper No. 6

Address only "The Commissioner of Patents, Washington, D. C.," and not any official by name.

All communications respecting this application should give the serial number, date of filing, title of invention, and name of the applicant.

LCE-Su.

Department of the Interior, United States Patent Office, Washington

February 23, 1915, U. S. Patent Office.
Feb. 23, 1915, Mailed.

Pennie, Davis and Goldsborough, 35 Nassau Street, New York, N. Y.:

Please find below a communication from the Examiner in charge of the application of Marcus C. Hopkins, for Sound Regenerating Machine, filed July 14, 1913, Serial No. 778,-826.

Thomas Ewing, Commissioner of Patents.

[fol. 151] In response to amendment of Feb. 6, 1915.

Page 7, line 7, "which are" should be canceled as duplicated in the following amendment.

It is doubtful to the examiner if a structure as disclosed by applicant will by itself produce sound waves corresponding in intensity to the recorded sound waves, as such requires that the entire energy represented by the recorded waves be transmitted without loss of energy to the diaphragm and that the diaphragm offer substantially no resistance to the movement so transmitted. If applicant insists on claims embodying such a limitation, he should satisfy this office by competent affidavits or by demonstration that such is true.

Claim 1 is rejected on Lumiere, of record, in view of the conical diaphragms of record. As such conical diaphragms are designed to be transversely rigid and operate in producing sound analogously to a piston, there would seem to be no apparent limit within a moderate range on the diameter which could be employed. Therefore, to increase the diameter of any such diaphragm, as in the reference cited, to perform an old function where there is no apparent limit to the diameter than may be employed, is not seen to be a display of invention.

In re Pein, 201 O. G., 570.

Claim 2 is rejected on the above references and reasons.

778826—68

778,826—2

No invention is seen, further, in enclosing Lumiere, or a similar structure, in a cabinet, especially in view of Miller, [fol. 152] of record, Fig. 6, or such structures as in

Eckhardt, 903,364, Nov. 10, 1908, (181-3), or

Zappert, English, 17,827, July 31, 1909, (181-3), 1 sheet.

Claim 3 is rejected on the references and for the reasons of record. It is not seen that applicant's partition effects any different function from the partition in any cabinet that separates the record and needle compartment from the sound emitting compartment, as in

English, 947,227, Jan. 25, 1910, (181-3),

or from the partitions in Shields or Welton, of record. Therefore, to mount any of the long arm transmission devices of record in a cabinet with such a separating wall is thought but a matter of wise selection and adaption, and not of invention.

Claim 4 is rejected on the references and for the reasons of record. In Johnson, 12 is a tympanum and 4 a transmitting arm. There would seem to be no invention in mounting Johnson in a cabinet, as in the German structure cited. So, also, e in Welton is a tympanum.

Claim 5 is rejected on the references and for the reasons of record. In Persichetti, a, f, is clearly a partition, and if his transmitting arm h were provided with a diaphragm at the mouth, as in Szek, or with a diaphragm, as in Johnson or Welton, the structure would meet the terms of this claim.

Claims 6 and 7 are rejected on the references and reasons of record and above given. If the mouth of h were flared, as in Szek, it would underlie e. See Fig. 2. The [fol. 153] claims fail to bring out applicant's invention, being so broad and indefinite as to be met in widely different structures not involving invention.

Claim 8 is rejected on Johnson, for the reasons of record.

Claims 9 and 10 are allowed.

Claims 11, 13, 14, 15 and 16 are rejected on the grounds of rejection of claim 1. The interposition of the cap of

778826—69

778,826—3

non-vibratile material in Lumiere, or any other type of diaphragm substituted in Lumiere, is not seen to involve invention, in view of the common use of such in the art, for the same purpose as it is employed by applicant.

Claim 12 is rejected on the grounds of rejection of claim 1.

Claims 17 to 28 inclusive are allowed.

Claims 29, 30 and 31 are rejected on Lumiere, in view of the conical diaphragms of record, for the reasons above given.

Claims 32 to 35, inclusive, are allowed.

Claim 7, line 3, "support" should be—holder—.

L. H. S.

W. D. Groesbeck, Exr.
778826—70

[fol. 154] Application Room, Feb. 23, 1916, 1, U. S. Patent Office

Div. 23—Room 379

#7

C

United States Patent Office

Application of Marcus C. Hopkins. Serial No. 778,826. Filed July 14, 1913. Sound Regenerating Machine

New York, February 22, 1916.

The Honorable Commissioner of Patents, Washington, D. C.

SIR: In response to Office Action of February 23, 1915, please amend as follows:

In the specification, page 7 line 16, change "substantially to —at least—, and in line 19 change "substantially" to —at least—.

Page 8, line 20, strike out "that" at the beginning of the line.

Page 7, line 7, cancel "which are."

In the second line of claim 1 and the second line of claim 2, after the word "same" insert/—without an amplifying horn or chamber—/ and [fol. 155] make the same insertion in the second line of claim 11, claim 12, claim 13, claim 14, claim 15 and claim 16.

Per G[x]. C[1].

In claim 7, change "support" to —holder— in line 3.

Remarks

In the last Office Action the Examiner expressed doubt whether the structure disclosed by applicant will itself produce sound waves corresponding in intensity to the recorded sound waves "as such requires that the entire

energy represented by the recorded waves be transmitted without loss of energy to the diaphragm and that the diaphragm offers substantial non-resistance to the movement to be transmitted" and called for affidavits or a demonstration. A demonstration of the machine was made to the Principal Examiner and his assistant last week, and we believe they were satisfied that the machine would produce, without an amplifying horn or chamber, sound waves substantially corresponding in intensity to the original recorded sound waves. Of course, the Assistant Examiner who wrote the last Office Action was mistaken in supposing that there is any necessary relation between the energy represented by the recorded waves and the energy delivered to the air by the diaphragm. Only a minute part of the energy of the recorded waves is gathered in by the recording trumpet and made use of to actuate the recording device. The energy put upon the air by the vibrating [fol. 156] diaphragm is not at all the same energy that existed in the recorded waves, but is the energy of the motor which drives the record tablet in the reproducing machine.

We have amended claims 1 and 2 and claims 11 to 16,

inclusive, to emphasize the fact that the machine has no horn or amplifying chamber. We do not believe that the Examiner will suggest that this is a negative limitation, and its purpose is consistent with the purpose which we have continually followed, that is, to distinguish the present machine from the ordinary machine in which the regenerator comprises a reproducer and a trumpet. In the opening part of the specification, we tried to make it clear that in ordinary machines, the reproducer, or sound box,

is incapable of generating sound waves of such a character as will persist in the air to any substantial extent. The character of the sound made by an ordinary phonograph sound box disconnected from the amplifying horn or chamber, is well known to the Examiner, and is, of course, easily distinguished in his mind from the sound produced by the sound box acting together with the amplifying horn or chamber. It has been demonstrated to the Examiner that the applicant's machine, without any amplifying horn or chamber, will produce a volume of sound which corresponds to the sound produced by the conjoint action of the sound box and amplifying chamber in an ordinary phonograph. In other words, the applicant's machine does, with its large dia- [fol. 157] phragm, what the old machines do with the combined diaphragm and amplifying horn or chamber, and in so doing the applicant's machine overcomes the limitations which necessarily reside in the use of a horn or chamber. This accomplishment is a perfectly definite thing which anyone can understand, which has often been tried before, and which is done by the applicant for the first time. We have done everything we possibly could do to define this distinction in the claims, and it seems to us that they do define it. The additional words inserted in the claims have not been inserted with the intent or purpose of changing their scope, nor is it intended that they shall in any way result in prolonging the prosecution of the case. They are merely an earnest of our purpose to distinguish definitely from the old machines in which an amplifying horn or chamber is used.

We hardly know what we can say in regard to that paragraph of the Examiner's letter which suggests that the

applicant's accomplishment does not involve invention. As we understand it, the argument is that Lumiere proposed

to use a large diaphragm, but not a conical diaphragm; that small conical diaphragms are old in sound boxes, and that consequently there is no invention in using a large conical diaphragm. It seems to us that this proposition need only be stated to refute itself. The fact is that, although small conical diaphragms were old in sound boxes, Lumiere, who is one of the most skilled men in the art, not only did not know that a large conical diaphragm would accomplish his purpose, but was unable to accomplish that [fol. 158] purpose at all. The Lumiere patent is owned by the Victor Talking Machine Company and it is well known to those skilled in the art that the suggestions of Lumiere were abortive and never resulted in an operative machine. The applicant's claims clearly differentiate from the Lumiere patent and that is all that is necessary. On the question of invention the Lumiere patent is pertinent to the present discussion only because it shows that prior to the applicant, the art did not know how to accomplish the applicant's result.

This ground of rejection was applied by the Assistant Examiner to claims 1, 2, 11 to 16 inclusive and 29, 30 and 31, and we do not believe that the present Examiner will insist upon it with respect to any one of those claims.

With respect to claim 2, the suggestion is that there is no invention in enclosing Lumiere by a cabinet of the character specified in claim 2, in view of Miller, Eckhardt or Zappert. In the first place, claim 2 distinguishes from Lumiere so enclosed, and in the second place the other references do not show a phonograph in which the sound producing means could be enclosed in an open-work cabinet, affording substantial free access of the surrounding

air thereto. These other references show horn machines, the very essence of which is that they should be open only on one side. Claim 2 defines an arrangement in which a direct reproducer is surrounded by an open-work cabinet so

that the sound may be given off in every direction. There [fol. 159] is nothing of the sort in the prior art.

With respect to claims 3 to 8, inclusive, the grounds of rejection are not well understood. Many patents have been cited against these claims and the Examiner has applied them in different ways in successive actions. It will, perhaps, be best to discuss each of the claims separately, referring to all of the references cited against them.

Claim 3, which was originally claim 5, was, in the first Office Action, rejected on Shanks, two Emet patents, Repp or Lumiere, mounted in any conventional cabinet as Skiff, "no invention being found in separating the record and diaphragm spaces by a partition," especially in view of Shields or Welton. As we understand it, the Shanks, Emet, Repp and Lumiere patents were cited to show devices in which the sound was reproduced without the use of an amplifier, by a sounding device connected to the needle holder by a transmission arm. It is not suggested that any one of these patents disclosed the combination of claim 3, wherein the record table is located in one compartment, and the sounding device in another, the transmission arm extending through the partition. In Skiff, the record table and the regenerator, comprising a sound box and an amplifying horn, are enclosed in a single compartment, which is pre-

cisely what the applicant does not do. His idea is to have the record table in one compartment which may easily be opened to remove and replace the record, to have the [fol. 160] sounding device in another compartment which is permanently closed, and to so arrange the transmitting arm that it can swing over the record and yet extend through the partition from the record table to the sounding device. In Shields the record holder and sound box are enclosed in the same compartment. There is no transmission arm proper, unless it be considered that the stylus 14 is a transmission arm, in which case it results that the record holder, the transmission arm and the sound box, are all in the same casing. There is no amplifier, because the phonograph illustrated is one of that type which was provided with a branched tube, the terminals of which were to be

placed in the ears of the listener. In Welton the record table, transmission arm and sound box are in one compartment, through the wall of which the tone arm extends, an amplifying horn being attached to the tone arm outside of the casing. There is here no cabinet with two compartments, and we are unable to imagine in what respect the Examiner supposed that it has any bearing on claim 3.

In the second Office Action this claim was rejected on the references of record without any application of those references. In the last Office Action the claim was rejected on the references of record, together with the patent to English No. 947,227, which shows the ordinary Victrola type of machine with encased horn. It is true that in this machine, as in all machines of the Victrola type, there are

two compartments, one containing the record disk, the [fol. 161] transmission arm and the sound box, together with the tone arm, and the other containing the amplifying chamber. It seems to us that claim 3 definitely distinguishes from such an arrangement, in that it specifies a transmission arm extending from one compartment to another with a tympanum located in one compartment and connected with the transmission arm. It would be a great mistake for the Examiner to assume that it was an easy thing to devise and construct a transmission arm capable of carrying the vibrations from the record groove to the outer edge of the record and through a partition to the tympanum. That was a very difficult thing to do, and in our judgment warrants the allowance of claim 3.

Claim 4 was originally claim 6, and was allowed in the first Office Action. In the second Office Action it was rejected on Johnson No. 1,015,321, together with Shields or Welton or the German patent No. 220,412. The Johnson patent shows merely a usual type of tone arm and the mechanism of the phonograph, excepting the motor, is entirely unenclosed. The Shield and Welton patents have already been considered. The German patent is practically the same as Welton, excepting that the record table is covered by movable cover d. We do not understand how this is to be applied to the claim. In the last Office Action the Examiner says, referring to the Johnson patent, that "12

is a tympanum and 4 a transmitting arm." That is certainly putting an extraordinary construction upon the [fol. 162] language of claim 4, but let us apply that interpretation. If 4 is the transmission arm, then what is the partition upon which it is supported and through which it extends, and how can the tympanum 4 swing?

The Examiner apparently recognized that the Johnson reference is lacking in the cabinet structure claimed, and says that there would be no invention in mounting Johnson in the cabinet of the German patent. We do not understand how this mounting is to be made so that the claim will read upon it, but even if that can be done, it would be to reject the claim on references which lack the very thing claimed. The Examiner also suggests that in Welton e is the tympanum, but in this case he is no better off than in the Johnson patent. There is no partition upon which the transmission arm is mounted and through which it extends.

Claim 5, which was originally claim 7, was allowed in the first Office Action. In the second Office Action it was rejected on the combination of the French patent No. 397,609 and the British patent No. 8011 of 1906. In the French patent the tympanum is the ordinary sound box diaphragm and there is a horn which extends downwardly through a bracket arm f which cannot by any stretch of the imagination be considered a partition. Even if it were a partition, the claim would not be met. It is not pretended that the British patent meets the claim, and by combining the two the Examiner has added the very thing which characterizes the claim. Furthermore, the combination suggested by the [fol. 163] Examiner would still not have any transmission arm extending through a partition.

Claim 6 originally claim 8, was allowed in the first Action and rejected in the second on the same references as claim 5, originally claim 7, and the same remarks apply to this claim. We may point out that it is one thing to bend a horn or tone arm, and another thing to produce a transmission arm which will change the direction of the vibra-

tions, as is necessary in claims 5 and 6. Really, the only difference between the action on claim 5 and the action on claim 6, is that claim 6 includes the further limitation that the tympanum is beneath the support and since this is not found in either of the references, the Examiner proposes to modify them so as to include it. Why should he not, having already injected into the references the characteristic element of the claim, which they did not disclose? Claim 7, originally claim 9, is rejected on the same references, and nothing need be said about it. Claim 8, originally claim 11, was rejected in the first action on Shelbe No. 957,994, and has been amended. In the second Office Action, as claim 10, it was rejected on Johnson, and in the last Office Action this rejection was repeated. To sustain this rejection the Examiner says "4 and 7 are two arms," whereas the fact is that 4 and 7 are one arm; but even considering them as two arms, the tympanum is not carried by the arm 7.

[fol. 164.] It seems to us that the real explanation of the somewhat extraordinary application of references just discussed is found in the last Office Action, where the Examiner says:

'The claims fail to bring out applicant's invention, being so broad and indefinite as to be met in wisely different structures not involving invention."

We have carefully considered this suggestion, and it seems to us that the claims are not open to that criticism. If they are, we would be glad to amend them, but after re-reading the specification, we think these claims properly define the intended structure and could not be misunderstood. If the

Examiner thinks otherwise, we would be glad to know it and have him say specifically wherein the claims are indefinite.

Although we understand that the Assistant Examiner who will act upon the case in response to this amendment is not the Assistant Examiner who has heretofore acted

upon the case, yet we would like, if possible, to get a final action at this time.

Respectfully submitted.

Pennie, Davis & Goldsborough, Attorneys for Applicant.

10 778826—80

[fol. 165] 2—260

Room 379, Div. 23

Paper No. 8

Address only "The Commissioner of Patents, Washington, D. C.," and not any official by name.

All communications respecting this application should give the serial number, date of filing, title of invention, and name of the applicant.

FE.

Department of the Interior, United States Patent Office, Washington

March 4, 1916, U. S. Patent Office.
Mar. 4, 1916, Mailed.

Pennie, Davis and Goldsborough, 35 Nassau Street, New York, N. Y.:

Please find below a communication from the Examiner in charge of the application of Marcus C. Hopkins, for Sound Regenerating Machine, filed July 14, 1913, Serial No. 778,826.

Thomas Ewing, Commissioner of Patents.

In response to amendment of Feb. 23, 1916.

Claims 1, 3, 11 to 16 and 29 to 31 are rejected as indefinite. The specification of the size according to results is believed to be too indefinite. The examiner understands that the base diameter and the altitude must have a definite relative proportion, and that the base diameter must be substantially nine inches in order that satisfactory results can be obtained. To merely specify this size by the result is be- [fol. 166] lieved to be too indefinite. The basis of reference

which is stated to be the recorded sound waves is believed to be an indefinite reference base, and that such a range would be too great and variable to be readily determined. For instance, a limitation such as from eight to ten inches for the base diameter might be given. The statement in some of the claims that the diameter exceeds nine inches is not believed to be sufficiently definite. If it is immaterial what the size is within a considerable range, then it is a mere question of expediency, or selection of any size one desires for any loudness, and would not involve invention.

Claims 3 to 6 are rejected on the references and reasons of record. It is not believed to require invention to put a

778826—81

partition anywhere one desires. If there is any invention, it is in the adaptation of the partition to the particular device. In other words, the construction by which the partition can be used is what involves the invention, if any, and not merely the idea of using a partition, as the claims now state. Attention is called to the decision in Thatcher Heating Co. vs. Burtis et al., C. D. 1887, 320 (or 39 O. G., 587), in which the U. S. Supreme Court held that there was no invention in the combination involved, no matter how or by what means it was effected; that the invention was in the means employed in making the adaptation.

[fol. 167] The case appears otherwise allowable, as now advised.

W. D. Groesbeck, Exr.

F.

778826—82

11817

Application Room, Mar. 28, 1916, U. S. Patent Office

Room 379

#9

United States Patent Office

Marcus C. Hopkins. Filed July 14, 1913. Serial No. 778,826. Sound Regenerating Machines

Hon. Commissioner of Patents.

SIR: In response to the Official action of March 4, 1916, please amend as follows:

Page 6, last line, after "gripped between" insert — and rigidly supported —.

Claims 1 and 2, line 3, after "panum" insert — of
D¹ large area rigidly supported at its periphery and freely exposed to unconfined air —.

Claims 11 and 12, line 3, after "tympanum" insert — of large area —.

D² Claim 11, line 4, before "mounted" insert — rigidly —.

[fol. 168] Claim 12, line 4, before "mounted" insert — having its outer edge rigidly —.

Claim 13, line 5, before "mounted" insert — rigidly —.

Claim 14, line 3, after "aperture" insert — exceeding nine inches in diameter —. Line 4, before "secured" insert — rigidly —.

Claim 15, line 3, after "tympanum" insert — of large area —. Line 4, before "secured" insert —
per G¹ rigidly —. Line 6, after "support," insert —/
D³ [the inner diameter of said rim exceeding nine]* inches, —.

Claim 16, line 5, before "secured" insert — rigidly —.

778826—83

[*Words and figures enclosed in brackets erased in copy.]

11818

Claims 29, 30 and 31, line 1, after "tympanum" in-
D' sert —/[rigidly supported at its periphery]*—./

The foregoing amendments are made as the result of an oral interview recently had with the Examiner, at which it was agreed that the said amendments would not only more clearly define the invention, but would also render the material distinctions between the same and the prior art, including a number of patents which show horns or amplifiers of paper or other similar material directly associated with the reproducer needle, clearly apparent. It is essential to the success of applicant's machine that the tympanum be of large area and that the base of the vibra- [fol. 169] tile portion thereof exceed nine inches in diameter, and furthermore that the peripheral edge of the tympanum, exterior of the vibratile portion, be rigidly secured or tightly gripped between the rings of the supporting frame. These definitions of the essential characteristics of the invention have been included in the claims by the amendments aforesaid, and said claims are, therefore, believed to be allowable.

The Examiner's objection that applicant indicates only the lower limit of the diameter of the tympanum and does not include both limits, is believed to be without substantial foundation. Applicant has demonstrated that his invention is not wholly satisfactory when the conical tympanum is made with a basal diameter of less than nine inches. He has also found that tympanums of much larger diameter are eminently successful, but he is not prepared to even indicate any maximum limit in respect of such diameter, nor should a statement of such an upper limit be required. He has produced a highly successful device which is novel and useful, and as the prior art discloses no similar device either structurally or operatively considered, it is submitted

11819

that he has properly defined his invention in the claims, when he has distinguished the device, as so defined in the claims, from the prior art.

For example, in claims 1 and 2, it is stated that the vibratile conical tympanum is of large area rigidly supported at

[*Words and figures enclosed in brackets erased in copy.]

[fol. 170] its periphery and freely exposed to unconfined air, so that when the tympanum is vibrated, it imparts to the surrounding free air, sound waves corresponding in intensity to the recorded sound waves. At a recent demonstration before the Examiner and his assistants, at the offices of applicant's attorneys in this city, it was made clearly manifest that the machine embodying the present invention did reproduce sounds or sound waves substantially corresponding in intensity to the recorded sound waves. The demonstrating machine was without any amplifying devices whatever in the form of a horn or sound-box, and the Examiner will recall that the sounds reproduced were clear, resonant, self-sustained and of admirable quality and timbre, and of an intensity which obviously approximated that of the recorded sound waves. It is, therefore, believed that the expression "substantially corresponding in intensity with the recorded sound waves" is correct and perspicuous and can give rise to no uncertainty or ambiguity. Of course, the term substantially implies a certain latitude, which the facts in the case would appear to justify, as all of the reproductions of recorded sounds by applicant's machine clearly indicate to the ordinary ear that they necessarily approximate the recorded sounds not only in intensity, but in timbre and quality.

In the other claims, as amended, the characteristic feature of mounting or supporting the outer edge of the vibratile tympanum rigidly on a support is brought out, and in [fol. 171] some of the claims, the lower limit of the diameter of the vibratile portion of the tympanum is set forth, and as all of these amendments go to structure and differentiate such structure from the prior art, it is urged that the claims are no longer open to the objection of indefiniteness.

In respect of the prior art patents, not of record, but to which attention has been called, and which show horns or other amplifying devices made of paper or the like and directly associated with the needle or stylus, attention is called to the fact that these devices do not differ in character from the ordinary amplifying horn or sound-box, and

are not per se vibratile tumpanæ, but mere amplifiers or condensers of sound waves. Furthermore, none of these prior art devices show any equivalent of a tympanum having its outer edge rigidly mounted in a support. In short, the horn-like reproducers are nothing more than the ordinary horn or amplifying megaphone having the stylus directly attached to its wall, so that the stylus sets up a localized vibration, which is confined within the flaring body of the horn and amplified and reproduced as sound waves, not by any vibration of the horn as a whole, but merely by the condensation and amplification of the vibrations of the stylus and the portion of the material of the horn immediately adjacent the stylus connection.

[fol. 172] It is respectfully submitted that as amended, the claims clearly define the essential novelty of applicant's invention and should be allowed.

Respectfully submitted.

Marcus C. Hopkins, by Pennie, Davis & Goldsborough, Attorneys.

4 778826—86

2—260

Div. 23, Room 379

Paper No. 10

Address only "The Commissioner of Patents, Washington, D. C.," and not any official by name.

All communications respecting this application should give the serial number, date of filing, title of invention, and name of the applicant.

FE.

Department of the Interior, United States Patent Office, Washington

Apr. 1, 1916, U. S. Patent Office. Apr. 1, 1916, Mailed.

Pennie, Davis and Goldsborough, 35 Nassau Street, New York, N. Y.:

Please find below a communication from the Examiner in charge of the application of Marcus C. Hopkins, for Sound

Regenerating Machine, filed July 14, 1913, Serial No. 778,826.

Thomas Ewing, Commissioner of Patents.

[fol. 173] In response to amendment of March 28, 1916.

No reply was made to the rejection of claims 3 to 6, made in the last office action. It is thought that this was an oversight by applicant.

The amendment above mentioned must therefore be held to be an incomplete response to the last office action.

W. D. Groesbeck, Exr.

F. 778826—87

United States Patent Office

Room 379

#11

E

M. C. Hopkins. Filed July 14, 1913. Serial No. 778,826.
Sound Regenerating Machine

Hon. Commisioner of Patents.

SIR: In the matter of the above entitled application, please cancel claims 3 to 6 inclusive and re-arrange the numerals of the other claims accordingly.

It was intended to cancel these claims by the last amendment, but through an inadvertence the matter was overlooked. The case is now believed to be in condition for allowance, and it is respectfully requested that it be passed to issue.

Respectfully submitted.

M. C. Hopkins, by Pennie, Davis & Goldsborough, Attorneys.

778826—88

[fol. 174] 2—181

BU. Serial No. 778,826

Address only the Commissioner of Patents, Washington, D. C.

Department of the Interior, United States Patent Office, Washington

April 11th, 1916.

Marcus C. Hopkins, Assor.

SIR: Your application for a patent for an improvement in Sound Regenerating Machine, filed July 14th, 1913, has been examined and allowed.

The final fee, twenty dollars, must be paid not later than six months from the date of this present notice of allowance. If the final fee be not paid within that period, the patent on this application will be withheld, unless renewed with an additional fee of $15, under the provisions of Section 4897, Revised Statutes.

The office delivers patents upon the day of their date, and on which their term begins to run. The printing, photolithographing, and engrossing of the several patent parts, preparatory to final signing and sealing, will require about four weeks, and such work will not be undertaken until after payment of the necessary fee.

When you send the final fee you will also send, distinctly and plainly written, the name of the inventor, title of inven-[fol. 175] tion, and serial number as above given, date of allowance (which is the date of this circular), date of filing, and, if assigned, the names of the assignees.

If you desire to have the patent issue to assignees, an assignment containing a request to that effect, together with the fee for recording the same, must be filed in this office on or before the date of payment of final fee.

After issue of the patent uncertified copies of the drawings and specifications may be purchased at the price of five cents each. The money should accompany the order. Postage stamps will not be received.

Final fees will not be received from other than the applicant, his assignee or attorney, or a party in interest as shown by the records of the Patent Office.

Respectfully, Thomas Ewing, Commissioner of Patents.

Pennie, Davis & Goldsborough, 35 Nassau St., New York, N. Y.

[On left margin:] In remitting the final fee give the serial number at the head of this notice.

[On right margin:] Uncertified Checks will not be Accepted.

778826—89

[fol. 176] 122. 2036. 23

$15 Rec'd. Mar. 22, 1918. C. C. U. S. Pat. Office.

#12

Petition

Honorable Commissioner of Patents, Washington, D. C.

SIR: Your petitioner, Marcus C. Hopkins, a citizen of the United States, residing in the Borough of Manhattan, City, County and State of New York, whose post office address is No. 35 Nassau Street, New York City, N. Y. represents that on July 14, 1913, he filed an application for Letters Patent for an improvement in sound regenerating machines, Serial Number 778,826, which application was allowed April 11, 1916, but that he failed to make payment of the final fee within the time allowed by law. He now makes renewed application for Letters Patent for said invention, and prays that the original specification, oath and drawings, may be used as a part of this application.

Signed at New York City, New York, on this 21st day of March, 1918.

Marcus C. Hopkins, by Pennie, Davis & Goldsborough, His Attorneys.

778826—90

[fol. 177] 2036 11821

#13

F

Div. 23, Room 379

United States Patent Office

Application of Marcus C. Hopkins. Renewal Serial Number 224,048. Filed March 22, 1918. Sound Regenerating Machine

New York, March 28, 1918.

Honorable Commissioner of Patents, Washington, D. C.

SIR: Prior to the examination on the merits of the above case, please enter the following amendments as hereby directed:

Page 6, erase from "The," line 13, through which," line 14, and substitute:/—Two of the three arms of the said spider—/; same page, line 24, correct the spelling of "underly" to underlie; change the last line as amended to read:/—[which peripheral portion or supporting rim 1 is tigthly gripped and rigidly supported between the]*—./

F[1]

F[2].

Page 14, between lines 5 and 6, insert the following:

F[3]. It will be noted that the distance between the point of the style q′ and the axis of the lever Q is greater than the length of the arm U which projects from the center of the lever R and to which the rod V is connected. By reason of this fact, and of the fact that the levers Q and R, and [fol. 178] the rod links S, S′ form a parallelogram, the length of vibration of the tympanum is relatively much less than that of the style, and the tympanum thus offers little resistance.

778826—91

11822

to the movement of the style, thereby greatly reducing the wear on the record. To compensate for this small movement

[*Words and figures enclosed in brackets erased in copy.]

of the tympanum, its large area enables it to move a large body of air, so as to obtain sound waves of large volume and great carrying power.—

In line 2 of each of claims 5 and 6, insert a comma after "members."

Cancel claims 25, 26 and 27.

Add the following claims:

---

29. In a sound-regenerating machine, a vibratile conical tympanum of large area rigidly supported at its periphery and freely exposed to unconfined air, a sound-vibrated element, and vibration transmission means connecting said element and said tympanum and arranged to impart to the tympanum vibrations which are relatively much shorter than the vibrations imparted to the said element.

F⁴.

30. In a sound-regenerating machine, a vibratile conical tympanum rigidly supported at its periphery and freely exposed to unconfined air, a sound-vibrated element, and vibration transmission means connecting said element and said tympanum arranged to impart to the tympanum vibrations which are relatively much shorter than the vibra-
[fol. 179] tions imparted to the said element; the tympanum having an area sufficiently large to effect, without amplification, sound waves of large volume and carrying power.

31. In a sound-regenerating machine, a vibratile conical tympanum of large area, rigidly supported at its periphery and freely exposed to unconfined air, a sound-vibrated element, and tensioned transmission means connecting said element and said tympanum and arranged to impart to the

tympanum vibrations which are relatively much shorter than the vibrations imparted to the record end of the style.

Remarks

It is desired to acknowledge the courtesy of the several extended interviews recently accorded in the matter of the

above case. The added claims are based on claims standing allowed in the case and are assumed for that reason to be allowable. A short explanation has been incorporated in the specification as regards the relative length of the vibrations of the tympanum and the style or the sound vibrated element.

Claims 25, 26 and 27 have been canceled, as those claims will be incorporated, together with others, in a divisional application directed to the tympanum or diaphragm per se.

Respectfully submitted.

Pennie, Davis & Goldsborough, Attorneys for Hopkins.

3 778826—93

[fol. 180] 2—260

Div. 23, Room 217

Paper No. 14

Address only "The Commissioner of Patents, Washington, D. C.,- and not any official by name.

All communications respecting this application should give the serial number, date of filing, title of invention, and name of the applicant.

WBB.

Department of the Interior, United States Patent Office, Washington

April 5, 1918, Patent Office.
Apr. 5, 1918, Mailed.

Pennie, Davis & Goldsborough, 35 Nassau St., New York.

Please find below a communication from the Examiner in charge of the application of Marcus C. Hopkins, Serial No. 224,048, filed March 22, 1918, Sound Regenerating Machine.

James T. Newton, Commissioner of Patents.

Responsive to amendment filed March 22, 1918.

Before this case can be passed to issue it will be necessary for applicant to certify over his own signature that his

address as given in the renewal petition is correct, as it does not correspond with the address given in his original petition.

[fol. 181] When properly certified the case may then be allowed.

W. D. Groesbeck, Examiner.

778826—94

Application Div., Apr. 18, 1918, U. S. Patent Office

#15. GX. Letter attached

In the United States Patent Office

Before the Examiner

Room 217, Div. 23

In re Application of Marcus C. Hopkins. Sound Regenerating Machine. Filed March 22, 1918. Serial No. 224,048.

Hon. Commissioner of Patents, Washington, D. C.

Sir: In response to the Official action of April 5, 1918, entry of the following amendments is hereby directed:

In line 2, of each of present claims 1, 2, 7, 8, 9, 10, 11, 12, erase "without an amplifying horn or chamber."

The matter to be erased is incorporated as an amendment in the communication filed February 23, 1916. Upon consideration, it appears that said matter is unnecessary to [fol. 182] the claims from which it is erased.

Enter the attached signed statement as to applicant's post office address.

Allowance of the case is asked.

Respectfully submitted.

Marcus C. Hopkins, by Pennie, Davis & Goldsborough, Attorneys.

Washington, D. C., April 18, 1918.

778826—95

Apr. 18, 1918, U. S. Patent Office

22. 2036

Div. 23, Room 379

Application Div.

United States Patent Office

Application of Marcus C. Hopkins. Renewal Serial Number 224,048. Filed March 22, 1918. Sound Regenerating Machines

New York, N. Y., April 6, 1918.

Honorable Commissioner of Patents, Washington, D. C.

SIR: I hereby certify that my address as given in the renewal petition in the above-entitled application is correct; [fol. 183] that I now reside in the borough of Manhattan, city, county and State of New York, and that my post office address is No. 35 Nassau Street, New York City.

Respectfully, Marcus C. Hopkins.

778826—96

Application Div., Apr. 20, 1918, U. S. Patent Office

12—3. 2036. 11824

#16

G

Room 217, Div. 23

In the United States Patent Office

Application of Marcus C. Hopkins. Filed March 22, 1918. Serial No. 224,048. Sound Regenerating Machine

New York, N. Y., April 19, 1918.

Honorable Commissioner of Patents, Washington, D. C.

SIR: Claim 11, change line 6, as amended, to read, an

G'. annular rim adjacent said support, the outer diameter of said rim exceeding nine inches, and a conical por-

---

[fol. 184] Remarks

Claim 11 has been amended to correct an inaccuracy which renders it inconsistent with, e. g., Claim 12. The circular aperture in the support exceeds nine inches in diameter.

Respectfully submitted.

Pennie, Davis and Goldsborough, Attorneys for Hopkins.

778826—97

2—181

Address only the Commissioner of Patents, Washington, D. C.

AH. Serial No. 778,826. 224,048

Department of the Interior, United States Patent Office, Washington

May 1, 1918.

Marcus C. Hopkins, Assor.

SIR: Your application for a patent for an improvement in Sound Regenerating Machine, filed Mar. 22, 1918, has been examined and allowed.

The final fee, twenty dollars, must be paid not later than six months from the date of this present notice of allowance. If the final fee be not paid within that period, the patent on this application will be withheld, unless renewed

[On left margin:] In remitting the final fee give the serial number at the head of this notice.

[On right margin:] Uncertified checks will not be accepted.

[fol. 185] with an additional fee of $15, under the provisions of Section 4897, Revised Statutes.

The office delivers patents upon the day of their date, and on which their term begins to run. The printing, photolithographing, and engrossing of the several patent parts, preparatory to final signing and sealing, will require about four weeks, and such work will not be undertaken until after payment of the necessary fee.

When you send the final fee you will also send, distinctly and plainly written, the name of the inventor, title of invention, and serial number as above given, date of allowance

(which is the date of this circular),* date of filing, and, if assigned, the names of the assignees.

If you desire to have the patent issue to assignees, an assignment containing a request to that effect, together with the fee for recording the same, must be filed in this office on or before the date of payment of final fee.

After issue of the patent uncertified copies of the drawings and specifications may be purchased at the price of five cents each. The money should accompany the order. Postage stamps will not be received.

Final fees will not be received from other than the applicant, his assignee or attorney, or a party in interest as [fol. 186] shown by the records of the Patent Office.

Respectfully, J. T. Newton, [Thomas Ewing],* Commissioner of Patents.

Pennie, Davis & Goldsborough, 35 Nassau Street, New York, N. Y.

778826—98

Mail Room, Jun. 3, 1918, U. S. Patent Office

Washington, D. C., June 3, 1918.

Hon. Commissioner of Patents, Washington, D. C.

Sir: Final fees are being paid to-day in the following cases of Marcus C. Hopkins, 778,826, Renewal 224,048, Sound Regenerating Machine; 808,577, Renewal 224,049, Sound Regenerating Machine; and 229,014, Acoustic Device. It is requested that the case first identified be given the lowest patent number.

Very respectfully, Pennie, Davis, Marvin & Edmonds.

778826—99

[fol. 187] 2—327

2036

$20 Rec'd Jun. 3, 1918. C. C., U. S. Pat. Office

Memorandum of Fee Paid at United States Patent Office

(Be careful to give correct Serial No.)

778,826

Serial No. Re. 224,048. June 1, 1918.
Inventor: Marcus C. Hopkins.

[*Words and figures enclosed in brackets erased in copy.]

Patent to be issued to Lektophone Corporation.

Name of invention, as allowed: Sound regenerating machine.

Date of payment: June 3, 1918.

Fee: Twenty dollars.

Date of filing: March 22, 1918.

Date of circular of allowance: May 1, 1918.

The Commissioner of Patents will please apply the accompanying fee as indicated above.

Pennie, Davis & Goldsborough, Attorneys.

[fol. 188] Send patent to Pennie, Davis, Marvin & Edmonds, 35 Nassau Street, New York City.

778826—100

Pennie, Davis, Marvin and Edmonds, Counsellors at Law, 35 Nassau Street

John C. Pennie, William H. Davis, Arba B. Marvin, Dean S. Edmonds, F. E. Barrows, W. B. Morton

Walter J. Gill, Jr., G. J. Hesselman, Merton W. Sage, E. H. Merchant, A. S. McDaniel, W. H. Taylor, Jr., V. T. Houghton, M. T. Fisher, David Weild

Washington Offices: 910 Washington Loan & Trust Bldg., Washington, D. C.

New York Cable Address: Penangold, New York, Western Union Code

Telephone: 1127 Rector

B. 2036

New York, August 24, 1920.

Honorable Commissioner of Patents, Washington, D. C.

Sir: In comparing our office copy of the file-wrapper with the original deed of patent No. 1,271,527 issued on the second day of July, 1918, to Marcus C. Hopkins, for Sound Regenerating Machine, we note the following errors occurring in the printed copy:

Page 1, line 25, "magaphone" appears for —megaphone—;

Page 5, lines 75 and 95; page 6, line 25, "long" appears for —large—.

[fol. 189] We are enclosing the original patent deed herewith and request that you kindly issue a certificate of correction covering these inaccuracies.

Very respectfully, Pennie, Davis, Marvin & Edmonds.

Enclosure.

Approved Sep. 16, 1920. R. F. Whitehead, Commissioner of Patents.

778826—101

Address only the Commissioner of Patents, Washington, D. C.

Letter No. —

Department of the Interior, United States Patent Office, Washington

7 September, 1920.

In the Matter of Letters Patent No. 1,271,527. Marcus C. Hopkins. Sound-regenerating Machines. July 2, 1920. Pennie, Davis, Marvin and Edmonds, Attorneys.

Report of the Acting Chief of the Issue and Gazette Division

The attorneys return the Letters Patent with a request that a certificate of correction be issued correcting the following errors:

1. Page 1, line 25, "magaphone" should be megaphone.

[fol. 190] 2. Page 5, lines 75 and 95, page 6, line 25 the word "long" should be large.

The first error is chargeable to the printer. The second error is caused through the incorrect entry of a portion of amendment "D" paper 9, filed March 28, 1916.

Respectfully John Hans, Acting Chief of Issue and Gazette Division.

To the Commissioner of Patents:

have been checked and are found

The errors referred to [appear]* to have occurred in

[*Words and figures enclosed in brackets erased in copy.]

the manner alleged by the Chief of the Issue and Gazette Division.

Respectfully, W. D. Groesbeck, Exr., Div. 23.

778826—102

October 6, 1920.

Messrs. Pennie, Davis, Marvin & Edmonds, 35 Nassau Street, New York, N. Y.

SIRS: Herewith please find Letters Patent No. 1,271,527, granted July 2, 1918, upon the application of Marcus C. Hopkins, returned to you with a certificate of correction endorsed thereon in accordance with your request.

Respectfully, Wm. I. Wyman, Chief Clerk.

Encl. 778826—103

[fol. 191] Mail Room, Nov. 12, 1924, U. S. Patent Office

#17

UNITED STATES DISTRICT COURT, SOUTHERN DISTRICT OF NEW YORK

Honorable Commissioner of Patents, Washington, D. C.

SIR: In compliance with the Act of February 18, 1922 42
([41]* Stat. L. 392), you are advised that there was filed on the 10th day of November, 1924, in this court an action, suit, or proceeding No. E30-256, entitled Name: Lektophone Corporation, Plaintiff, Address: Jersey City, New Jersey, versus Name: Western Electric Company, Inc., Defendant, Address: New York, N. Y., brought upon the following patents:

	Patent No.	Date of patent	Patentee
1.	1,271,527	July 2nd, 1918	Lektophone Company.
2.			
3.			
4.			
5.			

[*Words and figures enclosed in brackets erased in copy.]

[fol. 192] In the above-entitled case on the — day of ——, 192-, the following patents have been included by — (insert amendment, answer, cross bill, or other pleading):

	Patent No.	Date of patent	Patentee
1.	.....	.....	.....
2.	.....	.....	.....
3.	.....	.....	.....
4.	.....	.....	.....
5.	.....	.....	.....

In the above-entitled case the following decision has been rendered or decree issued:

.....

.....

In witness whereof I have affixed my hand this 11th day of November, 1924, at New York, N. Y.

Alex Gilchrist, Jr., Clerk of said Court.

778826—104

Mail Room, Feb. 18, 1925, U. S. Patent Office

#18

UNITED STATES DISTRICT COURT, SOUTHERN DISTRICT OF NEW YORK

Honorable Commissioner of Patents, Washington, D. C.

SIR: In compliance with the Act of February 18, 1922 42
[fol. 193] ([41]* Stat. L. 392), you are advised that there was filed on the 13th ady of February, 1925, in this court an E31—
action, suit, or proceeding No. [E31]*—171, entitled Name: Lektophone Corporation, Plaintiff, Address: Jersey City, N. J., versus Name: Vitalis Himmer, Jr., Defendant, Address: N. Y., N. Y., brought upon the following patents:

[*Words and figures enclosed in brackets erased in copy.]

	Patent No.	Date of patent	Patentee
1.	1,271,527	July 2, 1918	Marcus C. Hopkins.
2.			
3.			
4.			
5.			

In the above-entitled case, on the — day of ——, 192-, the following patents have been included by — (insert amendment, answer, cross bill, or other pleading):

	Patent No.	Date of patent	Patentee
1.			
2.			
3.			
4.			
5.			

[fol. 194] In the above-entitled case the following decision has been rendered or decree issued:

. . . . . .

. . . . . .

In witness whereof I have affixed my hand this 14th day of February, 1925, at New York, N. Y.

Alex Gilchrist, Jr., Clerk of said Court.

778826—105

Mail Room, May 28, 1925, U. S. Patent Office

#19

UNITED STATES DISTRICT COURT, SOUTHERN DISTRICT OF NEW YORK

Honorable Commissioner of Patents, Washington, D. C.

SIR: In compliance with the Act of February 18, 1922
42
[41]* Stat. L. —), you are advised tha tthere was filed on the 3rd day of March, 1925, in this court an action, suit, or

[*Words and figures enclosed in brackets erased in copy.]

proceeding No. 2075, entitled Name: Lektophone Corp., Plaintiff, Address: Jersey City, N. J., versus Name: Sylo Lighting Fixture Co., Defendant, Address: 166 Flatbush Ave., Brooklyn, New York, brought upon the following patents:

[fol. 195]

	Patent No.	Date of patent	Patentee
1.	1,271,527	July 2, 1918	Plaintiff as Assignee.
2.	1,271,529	July 2, 1918	Plaintiff as Assignee.
3.	.....	.....	.....
4.	.....	.....	.....
5.	.....	.....	.....

In the above-entitled case, on the — day of ——, 192-, the following patents have been included by — (insert amendment, answer, cross bill, or other pleading):

	Patent No.	Date of Patent	Patentee
1.	.....	.....	.....
2.	.....	.....	.....
3.	.....	.....	.....
4.	.....	.....	.....
5.	.....	.....	.....

In the above-entitled case the following decision has been rendered or decree issued:

.....

.....

[Matter enclosed between rules erased in copy.]

In witness whereof I have affixed my hand this 25th day of May, 1925, at Brooklyn, New York.

Percy G. B. Gilken, Clerk of said Court.

[fol. 196] Mail Room, Nov. 3, 1925, U. S. Patent Office

20

UNITED STATES DISTRICT COURT, DISTRICT OF NEW JERSEY

Honorable Commissioner of Patents, Washington, D. C.

SIR: In compliance with the Act of February 18, 1922

42

[41]* Stat. L. —), you are advised that there was filed on the 4th day of September, 1925, in this court an action, suit, or proceeding No. E-1431, entitled Name: Lektophone Corporation, Plaintiff, Address: Jersey City, N. J., versus Name: De Forest Radio Company, Defendant, Address: 139 Franklin St., Jersey City, N. J., brought upon the following patents:

	Patent No.	Date of patent	Patentee
1.	1,271,527	July 14, 1913	Marcus C. Hopkins
2.	1,271,529	July 14, 1913	Marcus C. Hopkins
3.			
4.			
5.			

In the above entitled case, on the — day of ——, 192-, the following patents have been included by — (insert amend-

[fol. 197] ment, answer, cross bill, or other pleading):

	Patent No.	Date of patent	Patentee
1.			
2.			
3.			
4.			
5.			

In the above-entitled case the following decision has been rendered or decree issued:

In witness whereof I have affixed my hand this 28th day of October, 1925, at Trenton, N. J.

George T. Cranmer, Clerk of said Court, R. S. Chevrier, Deputy.

778826—107

(Here follow drawings, side folios 198, 199, 200, 201, and 202)

[*Words and figures enclosed in brackets erased in copy.]

M. C. HOPKINS.

SOUND REGENERATING MACHINE.

APPLICATION FILED JULY 14, 1913. RENEWED MAR. 22, 1918.

1,271,527. Patented July 2, 1918.

3 SHEETS—SHEET 1.

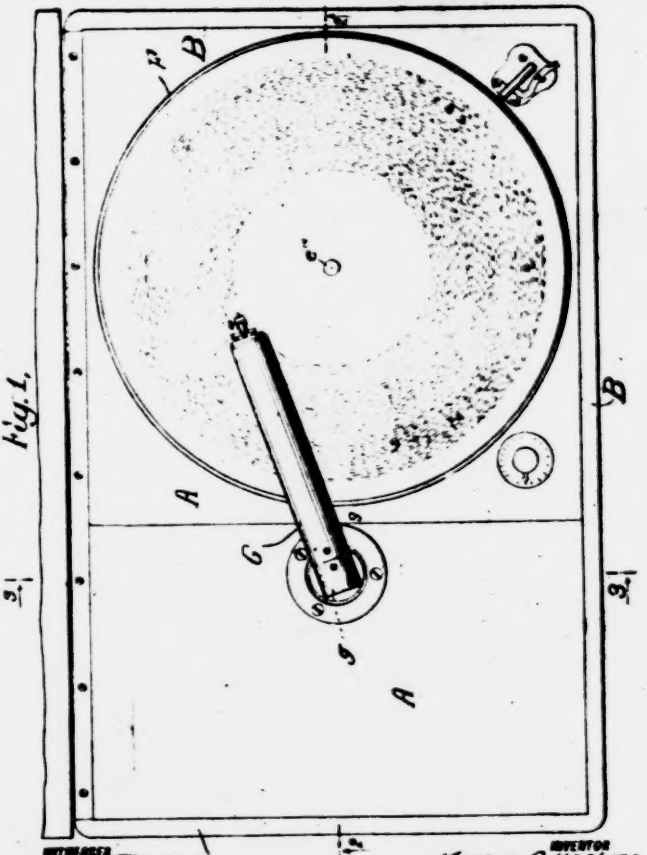

Fig. 1.

WITNESSES
M. A. Bill

INVENTOR
Marcus C. Hopkins

ATTORNEYS

110

M. C. HOPKINS.

SOUND REGENERATING MACHINE.

APPLICATION FILED JULY 14, 1913. RENEWED MAR. 22, 1918.

1,271,587. Patented July 2, 1918.

3 SHEETS—SHEET 2

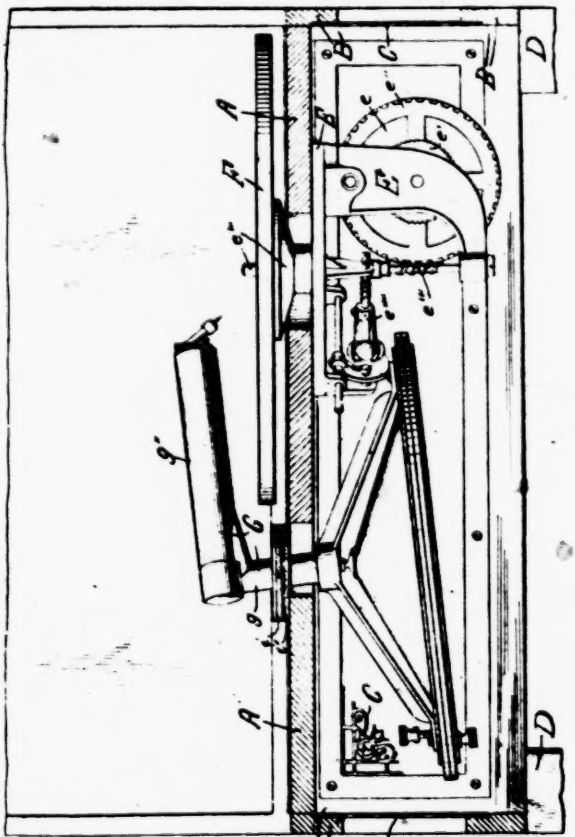

Fig. 2.

WITNESSES
M. A. Hill

INVENTOR
Marcus C. Hopkins

ATTORNEYS

111

SOUND REGENERATING MACHINE.

APPLICATION FILED JULY 14, 1913. RENEWED MAR. 22, 1918.

1,271,527. Patented July 2, 1918.

3 SHEETS-SHEET 3.

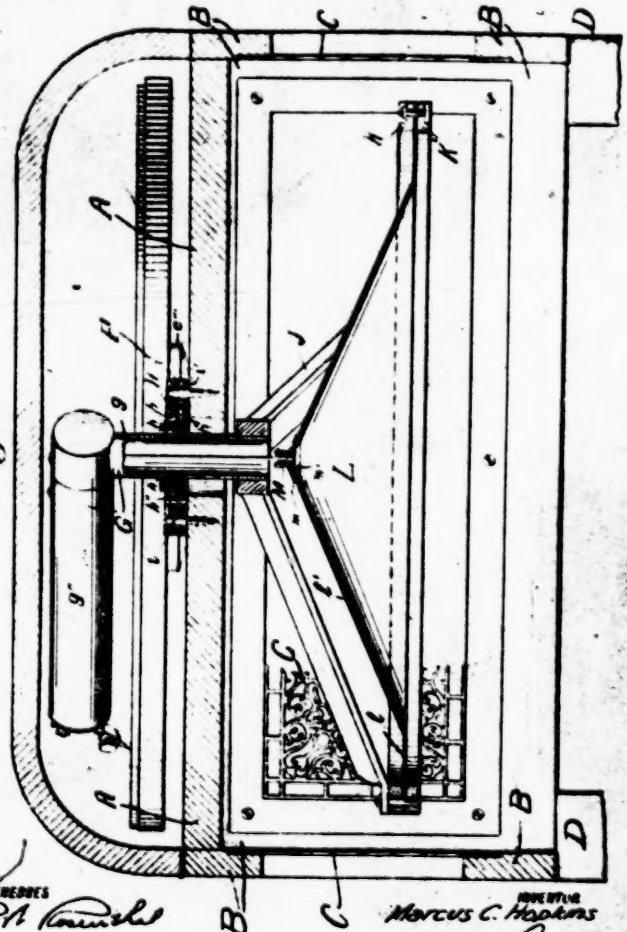

Fig. 3.

WITNESSES

Leon A. Rosenthal

M. A. Bell

INVENTOR

Marcus C. Hopkins

BY

Prince Lawrence Goldsborough

ATTORNEYS

112

M. C. HOPKINS.

SOUND REGENERATING MACHINE.

APPLICATION FILED JULY 14, 1913. RENEWED MAR. 22, 1918.

1,271,627. Patented July 2, 1918

3 SHEETS—SHEET 1.

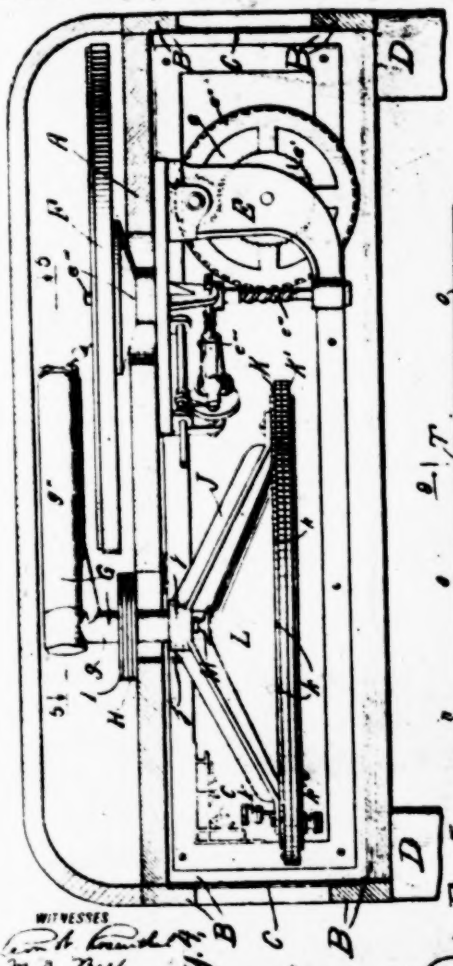

Fig. 4.

Fig. 5.

WITNESSES

INVENTOR

Marcus C. Hopkins

ATTORNEYS

M. C. HOPKINS.

SOUND REGENERATING MACHINE.

APPLICATION FILED JULY 14, 1913. RENEWED MAR. 22, 1918.

1,271,527. Patented July 2, 1918.

5 SHEETS—SHEET 3.

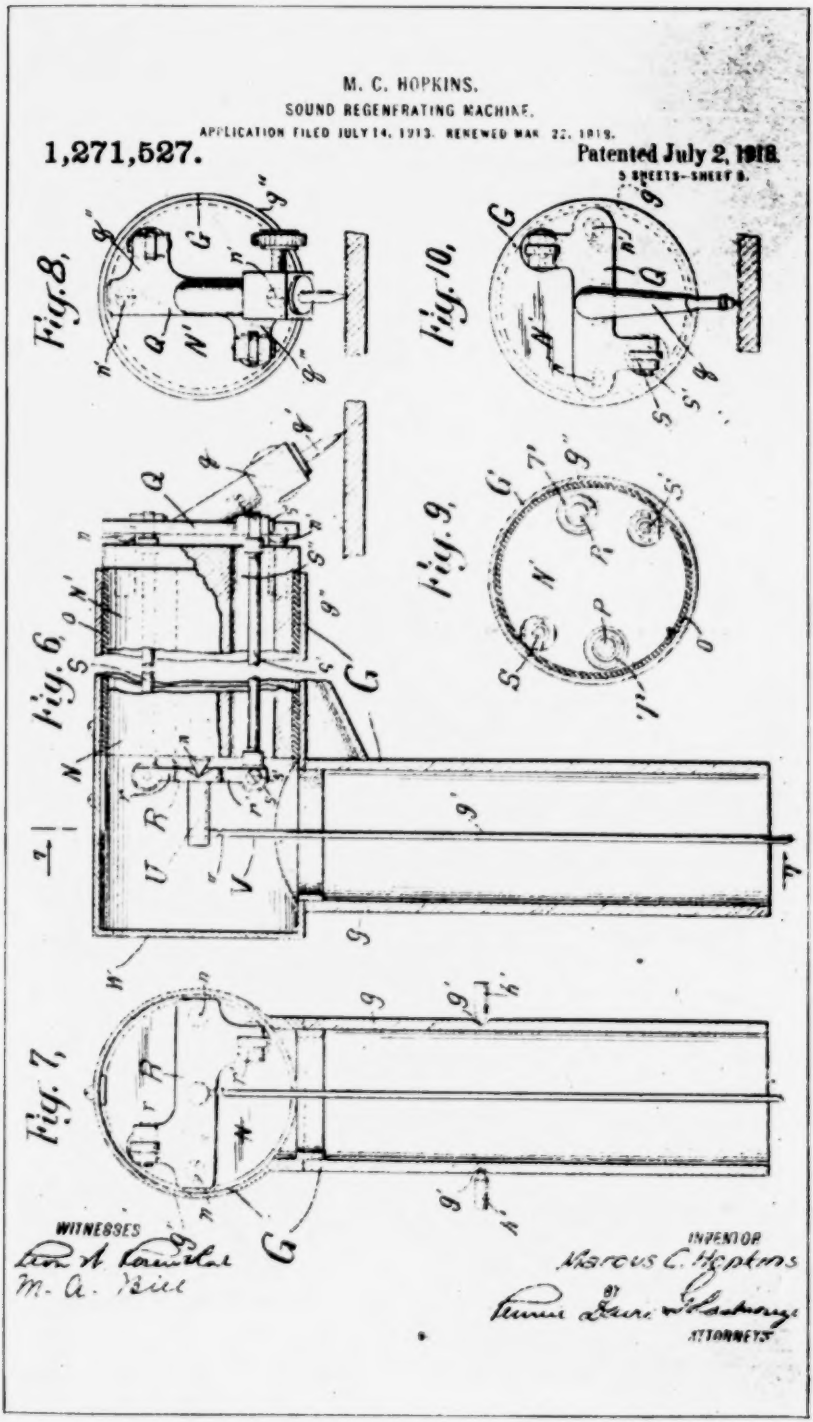

[fol. 203] United States Patent Office

Marcus C. Hopkins, of Jersey City, New Jersey, Assignor, by Mesne Assignments, to Lektophone Corporation, of New York, N. Y., a corporation of Delaware.

Sound-regenerating Machine

Specification of Letters Patent

1,271,527. Patented July 2, 1918

Application filed July 14, 1913. Serial No. 778,826. Renewed March 22, 1918. Serial No. 224,048.

To all whom it may concern:

Be it known that I, Marcus C. Hopkins, a citizen of the United States, residing at No. 2859 Boulevard, Jersey City, county of Hudson, and State of New Jersey, have invented certain new and useful Improvements in Sound-Regenerating Machines; and I do hereby declare the following to be a full, clear, and exact description of the invention, such as will enable others skilled in the art to which it appertains to make and use the same.

This invention relates to instruments which reproduce sounds, such as the talking machine and the phonograph, and is particularly directed to the attainment of a direct propagation in free air from a record of self-sustaining sound waves substantially corresponding to the original recorded sounds in intensity or amplitude as well as in pitch and timbre, as distinguished from an initial generation of violent air disturbances in a confined space, and a subsequent transformation of such disturbances into self-sustaining sound waves by means of the magaphone or trumpet, commonly employed with most existing machines.

The device employed to propagate such regenerated sound waves in air from a record I herein term a "regenerator," and, this device in the phonograph and talking machine comprises the "reproducer" together with the trumpet. The "reproducer" alone is incapable of generating such sound waves in air, and the violent air disturbances which are produced by this diaphragm, and which issue through its mouth piece, are almost immediately dis-

sipated in heat or in waves, which are not heard at any considerable distance if the horn be removed.

In the case of the "reproducer," all of the energy received from the record issues from its mouth as relatively violent disturbances, which are impressed upon a very small amount of free air, quite incapable of conducting such disturbances without transformation losses, and therefore the trumpet is resorted to to resist transformation into heat and to control the lateral form of the wave during a progressive spreading action, which is accompanied by a lessening of the violence of the disturbances, until a wave front of great area is attained having a movement appropriate to the sound conductivity of air. In this way it has been found practicable to transform a satisfactory part of the energy obtained from a moving record, into self-sustained sound waves in air, but in every instance this method has been accompanied by distortions of the true recorded sounds in the reproducer, and more particularly in the trumpet, giving rise to those characteristic sounds, known as phonograph and horn sounds. These distortions of the true sounds are in a measure impressed upon the record in its making, but are more noticeable in the reproduction where a suppression of character and overtones, the loss of "timbre" in instruments and the voice, and the accentuation of notes of certain pitch, so change the recorded number that a faithful reproduction is not obtained.

It is an object of the present invention to regenerate the recorded sounds directly from the record, without the interposition of a confined body of air and without the employment of a restrictive transformer, such as a horn.

The "sound regenerator" in the case of the present invention, comprises a tympanum of relatively great area freely exposed to unconfined air, in which the sounds are to be propagated and a mechanical transmission which faithfully transmits the vibrations produced by the record, to the tympanum, in such manner that the tympanum excites directly in the free air surrounding it sound waves of an intensity or amplitude substantially corresponding to the original recorded sound waves. In other words, the original sounds are directly regenerated by the vibrating tympanum without the interposition of a restrictive or sound modifying transformer.

The invention consists in providing a tympanum of novel construction, which is capable of responding to the high frequency vibrations employed in the reproduction of sounds, and of imparting these vibrations to a large body of air; in providing a suitable mounting for this tympanum to permit it to exercise its function; and in providing a vibration transmission for receiving the vibratory movement from the record and transmitting this movement to the tympanum, without change of character and appreci- [fol. 204] able loss of energy. The invention also comprehends certain combinations of parts and details of construction and location hereinafter particularly described and specifically pointed out in the appended claims.

I have illustrated in the accompanying drawings a sound reproducing machine embodying the several novel features of the invention as they may be employed in regenerating sounds from records made with either laterally or vertically sinuous grooves.

In the drawings,

Figure 1 is a plan view of the machine with the cover raised.

Fig. 2 is a vertical section on line 2—2 of Fig. 1, with cover and transmission arm raised.

Fig. 3 is a vertical section on line 3—3 of Fig. 1 with cover closed.

Fig. 4 is a vertical section on line 2—2 of Fig. 1 with cover closed and transmission arm in playing position.

Fig. 5 is a longitudinal section through the transmission arm on line 5—5 of Fig. 4.

Fig. 6 is a vertical longitudinal section through the transmission arm on line 6—6 of Fig. 5.

Fig. 7 is a vertical section on line 7—7 of Fig. 6.

Fig. 8 is an end view of the transmission arm.

Fig. 9 is a cross-section on line 9—9 of Fig. 5, and

Fig. 10 is a view similar to Fig. 8 of a modified arrangement for vertically sinuous records.

Referring to the drawings, the illustrated machine is mounted within a cabinet having a deck A upon which the motor and sound regenerator are supported. Side walls B downwardly extending from the edges of the deck

A are preferably apertured on all sides and provided with open work grilles C which afford substantially uninterrupted air paths for the sound waves from the interior of the cabinet in all directions laterally to the surrounding atmosphere. In the machine shown the cabinet is bottomless and provided with legs D at its four corners.

The motor may be of any suitable type, that shown having a frame E, spring drums e, winding gear e', spiral drive gear e'', high pitch spiral table shaft e''' and governor e''''. The frame E of the motor is secured against the under side of the deck A depending therefrom and the table shaft projects upwardly through the deck A and carries the circular record table F above the deck. The motor frame E is preferably insulated from the deck A by rubber washers not shown.

The sound regenerator has a right-angled tubular support G, the vertical arm g of which has diametrically opposite conical depressions g' which are engaged by pointed screws h' which project inwardly from and are threaded through a ring h of larger internal diameter than the external diameter of the vertical arm g of the right-angled support G. The pointed screws h' engage the depressions g' forming a horizontal axis perpendicular to the horizontal arm g'' of the right-angled support G about which axis the arm g'' can swing in a vertical plane, the vertical arm g the while being inclined within the ring h. The ring h comprises the ring h proper and an annular retaining plate h'' screwed upon the lower face of the ring h, an annular groove at the junction of the ring h and plate h'' receiving the inner edge of a holding plate H in such manner that the ring h and the right-angled support G may be turned about a vertical axis in the holding plate H.

The holding plate H is clamped between two rubber or felt rings, i, i', the lower ring i' resting upon the deck A. A ring I is placed upon the top of the upper ring i and screws i'' have their heads seated in the ring I and are screwed down into the deck A. The ring H and the rubber or felt rings i and i' have large holes through which the screws i'' pass, so that these screws do not come into contact with the ring H and the right-angled support G is therefore entirely insulated from the deck A by the rubber or felt rings. The vertical arm g of the right-angled sup-

port G extends downwardly through an aperture in the deck A at a point near the periphery of the record table F. A conical spider J shown as having three arms has its hub *j* fitted to the lower extremity of the vertical arm *g* of the right-angled support G, and is secured thereon by a set screw *j'*. To the ends of the arms of the spider J is secured by screws an annulus consisting of two ponderous rings K, K′ of metal, these two rings being clamped together by screws *k* spaced at short intervals. Two of the three arms of the said spider are screwed tightly to the rings K, K′ and the third is as tightly secured to said rings but by adjustable screws *k' k''* arranged in such manner that the rings, K, K′ can be secured at varying distances from the foot of this third leg, there being sufficient spring in the spider legs to permit of an adjustment at this point of one-quarter of an inch or so, if desired. It will be seen that owing to the proximity of the mounting of the vertical arm *g* of the right-angled support G to the edge of the record table F, the spider J and the rings K, K′ will underlie the record table and permit of a very compact arrangement of the working parts within the cabinet.

A tympanum L of light vibratile material has an annular plane peripheral portion l, the outer edge of which pe- [fol. 205] ripheral portion or supporting rim *l'* is tightly gripped and rigidly supported between the ponderous rings K, K′, and a central conical portion l′ rising from the inner edge of the annular plane peripheral portion. If satisfactory regeneration of sounds from a record is to be had, the whole diameter of the tympanum, that is, the diameter of the aperture in the rings K, K′, should exceed nine inches in order that the conditions shall be fulfilled which are required to regenerate the sound waves in the manner above described. The base of the central conical portion l′ of the tympanum should exceed in area one-half the effective area of the entire tympanum, that is, the area of the aperture in the rings K, K′; or in other words, the diameter of the base of said conical portion should be at least eight-tenths of the diameter of the circular aperture in the supporting rings K, K′. The altitude of the conical portion l′ of the tympanum should be at least one-quarter of the diameter of its base. It is, of course, possible to make some variation from the approximate sizes given without materially alter-

ing the result, but if the tympanum is made as shown in the drawings, any great variation from these proportions will be found to affect the character of the reproduction. It is of vital importance that the tympanum be made of crisp, strong material, having considerable rigidity within itself, and it is also of vital importance that the tympanum as a whole be extremely light and have as little inertia as possible without a weakening effect. The tympanum is shown of conical form with a smooth surface, and this has been found to be very satisfactory. The conical shape is given the tympanum so that shocks or vibrations impressed upon the apex of the cone in a direction toward its base will move the whole cone bodily, the strains being imparted edgewise of the material and no wave motions being set up in the thin material of the cone. The curvature of the walls of the cone preclude the setting up of waves in the material and the intended object, a simultaneous movement of the whole conical portion of the tympanum, is attained. While I prefer to construct the tympanum in the form described and shown with a smooth surface, especially in view of the ease of construction, yet it is possible to form radial corrugations in the conical portion l' and radial or concentric corrugations in the plane peripheral portion l and produce a light, stiff and very satisfactory article for the purpose. It is possible that when the tympanum is provided with corrugations as just suggested, some variation from the proportions above given may be found possible, and perhaps advisable, but such variations from the proportions given will not be great. The tympanum should preferably be constructed of a colloidal substance and should be from 3 to 20 thousandths of an inch in thickness according to the crispness or stiff character of the material used. Compressed fibrous material, such as hot pressed paper or fiber, has been found to act satisfactorily. It will be noted that the arms of the spider J incline downwardly to correspond with the conical shape of the tympanum L and that the apex of the conical portion of the tympanum is pointed upwardly toward *to* deck A of the cabinet, and that the concave side of the tympanum is open to the surrounding atmosphere through the open bottom of the cabinet, no obstructions being presented to the sound waves issuing from the concave surface of the tympanum.

A cap M is secured to the apex of the conical portion l′ of the tympanum L, and this cap should be of more rigid construction than the remainder of the tympanum and should preferably be three-eighths of an inch or more in diameter. I prefer to make the cap M of metal, extremely light but very rigid, and in the form of two cones m, m′ screwed tightly together upon opposite sides of the tympanum and gripping with their edges the material of the conical portion of the tympanum. In order that a tight and positive application of the cones forming the cap M to the conical portion of the tympanum may be had, it is preferable to form the cone m′ of lesser angle than the conical portion of the tympanum, and the cone m of greater angle than the conical portion of the tympanum in which case their edges will securely grip the tympanum material when they are secured together. The cap M is applied to the tympanum to receive the shocks which are to be applied to the tympanum as a whole, and convey them to sufficient of the material of the tympanum to insure the movement of the tympanum as a whole. This will be better understood when it is considered that if the shock were applied to paper or hard rubber at a single small point, the inertia of the tympanum as a whole would be sufficient to resist the atttack and the material would be distorted or dented at that point, the effect of the shock upon the tympanum as a whole being entirely lost. The cap M being of hard material such as metal will resist the bending action and distribute the shock to so much of the surface of the material of the tympanum as is capable of successfully resisting the shock, and it will then be transmitted to the tympanum as a whole. The plane peripheral portion l of the tympanum maintains the place of the conical active portion of the tympanum and yields sufficiently to permit of the required motion of the conical portion, resisting, however, displacement of the coni- [fol. 206] cal portion in just that degree necessary to maintain the form and neutral position of the active conical portion. Were the plane peripheral portion l of considerably greater width or markedly narrower than described, its function would be destroyed to a degree corresponding to the remoteness of the departure from the approximate proportion given and the effective portion of the conical portion of the tympanum would be proportionately lessened.

In the tubular arm g″ of the transmission support G are located two ponderous members or weights N and N′. These members N and N′ are shown as insulated from the wall of the arm g″ by a tube o of insulating material, such as soft rubber or felt. One at least of the ponderous members N and N′ must be moveable relatively to the other and therefore it cannot be rigidly secured to the support G, and the insulating material becomes necessary to avoid rattling. I preferably insulate both of the ponderous members or weights N, N′ from the wall of the transmission support G. Pins P projecting from the ponderous member N, and sliding in holes in the other ponderous member N′, act as guides and prevent disalinement and angular displacement of the moveable ponderous member. Knife edge fulcra n and n′ are secured in and project from the ends of the ponderous members N and N′ and in the form of the device shown in Figs. 1 to 9 the fulcra n are arranged horizontally and the fulcra n′ are arranged vertically. A lever Q is mounted on the fulcra n′ and is capable of movement upon a vertical axis. A style holder q projects from the lever Q downwardly at an incline so that the point of a style q′ held in the style holder is considerably removed from the axis of the lever Q and movement given the style q′ by the record will effect an oscillation of the lever Q about its vertical axis upon the fulcra n′. The lever Q has arms q″ and q‴ projecting from opposite sides thereof, the arm q″ being near the top of the lever Q and the arm q‴ being near the bottom of said lever. The reason for this arrangement of the arms upon the lever will presently appear.

A lever R is mounted upon the fulcra n and oscillates upon a horizontal axis. This lever has arms r and r′ extending upwardly and downwardly from its opposite sides, the arm r projecting from a point near one end of the lever R, and the arm r′ projecting from a point near the other end of the lever R. It will now be seen that a point upon the arm r of the lever R is opposite a similar point on the arm q″ of the lever Q and these two points are connected by rod link S. It will also be seen that a point upon the arm r′ of the lever R is opposite a point upon the arm q‴ of the lever Q, and these two points are connected by a rod link S′. The rod links S and S′ have eye-ends arranged in planes removed 90° from one another, and these eye-ends s are en-

gaged by pivot screws s′ upon the arms of the levers Q and R. A parallelogram is formed by the levers Q and R and the rod links S and S′ and in the form just described, which is adapted for a laterally sinuous groove in the record, oscillation of the lever Q about a vertical axis will produce like oscillations of the lever R about a horizontal axis. Spring T preferably mounted upon the pins P press the ponderous members N and N′ apart forcing the knife edge fulcra n and n′ tightly against the levers R and Q, and put the parallelogram of levers and links under tension, precluding any rattle or looseness of the levers upon the fulcra or of the eye-ends of the links upon their pivot screws, and as the movable ponderous member of the combination is insulated from the transmission support G, no rattle or displacement of the parts can take place when the record groove oscillates the lever Q, but such oscillation will be faithfully transmitted to the lever R. The ponderous members N and N′ have clearance holes s″ for the rod links S and S′.

An arm U projects from the central portion of the lever R and to its end is rigidly secured a rod V which extends downwardly through the interior of the arm g of the transmission support G, its lower end being rigidly secured to the cap M of the tympanum. The rod V is nicked or thinned at r close to the arm U of the lever R to permit of a slight springing action which compensates for the very slight angular motion of the arm U when the lever R is oscillated. It will now be seen that the oscillation of the lever R about its horizontal axis imparted to it from the lever Q, will effect an endwise vibration of the rod V which is directly impressed upon the tympanum L. A cap W closes the opening at the angle of the transmission support G and the removal of this cap gives access to the working parts of the rear end of the transmission.

It will be noted that the distance between the point of the style q′ and the axis of the lever Q is greater than the length of the arm U which projects from the center of the lever R and to which the rod V is connected. By reason of this fact, and of the fact that the levers Q and R, and the rod links S, S′ form a parallelogram, the length of vibration of the tympanum is relatively much less than that of the style, and the tympanum thus offers little resistance to the movement of the style, thereby greatly reducing the

wear on the record. To compensate for this small movement of the tympanum, its large area enables it to move a large body of air, so as to obtain sound waves of large volume and great carrying power.

When a vertically sinuous record is employed the lever Q [fol. 207] is mounted to oscillate about a horizontal axis, as shown in Fig. 10, no change in the lever R being required.

Having thus described my invention, what I claim and desire to secure by Letters Patent, is:—

1. In a machine for directly regenerating sound from a record of the same, a vibratile conical tympanum of large area rigidly supported at its periphery and freely exposed to unconfined air, and a mechanical transmission through which the vibrations produced by the record are transmitted to the tympanum, the tympanum being of sufficient area to impart to the surrounding free air, when the tympanum is so vibrated, sound waves subtantially corresponding in intensity to the recorded sound waves; substantially as described.

2. In a machine for directly regenerating sound from a record of the same, a vibratile conical tympanum of large area rigidly supported at its periphery and freely exposed to unconfined air, a mechanical transmission through which the vibrations produced by the record are transmitted to the tympanum, the tympanum being of sufficient area to impart to the surrounding free air, when the tympanum is so vibrated, sound waves substantially corresponding in intensity to the recorded sound waves, and an open-work cabinet inclosing the tympanum but affording substantially free access of the surrounding air thereto; substantially as described.

3. In a direct sound regenerating machine, the combination of a record holder, a transmission support mounted to swing over said record holder, and a tympanum carried by said support and extending under said record holder; substantially as described.

4. In a direct sound regenerating machine, the combination with a record holder, of a transmission support mounted to swing about vertical and horizontal axes, said support having an arm extended to move above and across said record holder and adapted to carrying a stylus, the support having a second arm having a free end, and a tympanum carried at the free end of said second arm with its

axis at an angle to said first arm; substantially as described.

5. In a sound regenerating machine, a vibration transmission comprising two ponderous members, fulcra carried by said members, an articulate parallelogram having opposite sides mounted on said fulcra and means exerting pressure upon said ponderous members to place said parallelogram under tension; substantially as described.

6. In a sound regenerating machine, a vibration transmission comprising two ponderous members, fulcra carried by said members, an articulate paralellogram of non-extensible links and non-flexible levers, the levers of said parallelogram being mounted on said fulcra, and means exerting pressure upon said ponderous members to place said paralellogram under tension; substantially as described.

7. In a machine for directly regenerating sound from a record of the same, a tympanum support having a circular aperture, a light vibratile tympanum of long area having its outer edge rigidly mounted in said support, said tympanum being shaped to provide an annular sustaining rim adjacent said support, and a conical portion springing from the inner edge of said annular rim, a cap of non-vibratile material rigidly secured to the apex of said conical portion of said tympanum, and a mechanical transmission through which the vibrations produced by the record are transmitted to the tympanum, the tympanum being of sufficient area to impart to the surrounding free air, when the tympanum is so vibrated, sound waves substantially corresponding in intensity to the recorded sound waves; substantially as described.

8. In a machine for directly renegerating sound from a record of the same, a ponderous tympanum support having a circular aperture, a light tympanum of long area having its outer edge rigidly mounted upon said support in said aperture, said tympanum having a central conical portion, the base of which exceeds in area one half the effective area of the said tympanum and a mechanical transmission through which the vibrations produced by the record are transmitted to the tympanum, the tympanum being of sufficient area to impart to the surrounding free air, when the tympanum is so vibrated, sound waves substantially corresponding in intensity to the recorded sound waves; substantially as described.

9. In a machine for directly renegerating sound from a record of the same, a ponderous tympanum support having a circular aperture, a light vibratile tympanum exceeding nine inches in diameter, having its outer edge rigidly mounted on said support, said tympanum being shaped to provide an annular rim adjacent said support, and a conical portion springing from the inner edge of said annular rim, a cap of non-vibratile material rigidly secured to the apex of said conical portion of said tympanum, and a mechanical transmission through which the vibrations produced by the record are transmitted to the tympanum, whereby the tympanum imparts to the surrounding free air sound waves substantially corresponding in intensity to the recorded sound waves; substantially as described.

10. In a machine for directly renegerating sound from a record of the same, a ponderous tympanum support having [fol. 208] a circular aperture exceeding nine inches in diameter, a light vibratile tympanum mounted in said aperture and having its outer edge rigidly secured upon said support, said tympanum being shaped to provide an annular rim adjacent said support, and a conical portion springing from the inner edge of said annular rim, the diameter of the base of said conical portion being not less than eight-tenths of the diameter of the said circular aperture in said support, a cap of non-vibratile material rigidly secured to the apex of said conical portion of said tympanum, and a mechanical transmission through which the vibrations produced by the record are transmitted to the tympanum, the tympanum being of sufficient area to impart to the surrounding free air, when the tympanum is so vibrated, sound waves substantially corresponding in intensity to the recorded sound waves; substantially as described.

11. In a machine for directly regenerating sound from a record of the same, a ponderous tympanum support having a circular aperture, a light vibratile tympanum of long area mounted in said aperture, and having its outer edge rigidly secured to said support, said tympanum being shaped to provide an annular rim adjacent said support, the outer diameter of said rim exceeding nine inches, and a conical portion springing from the inner edge of said annular rim, the altitude of said conical portion being substantially one-fourth of the diameter of its base, a cap of non-vibratile material rigidly secured to the apex of said conical portion

of said tympanum, and a mechanical transmission through which the vibrations produced by the record are transmitted to the tympanum, the tympanum being of sufficient area to impart to the surrounding free air, when the tympanum is so vibrated, sound waves substantially corresponding in intensity to the recorded sound waves; substantially as described.

12. In a machine for directly regenerating sound from a record of the same, a ponderous tympanum support having a circular aperture exceeding nine inches in diameter, a light vibratile tympanum mounted in said aperture, and having its outer edge rigidly secured to said support, said tympanum being shaped to provide an annular rim adjacent said support, and a conical portion springing from the inner edge of said annular rim, the diameter of the base of said conical portion being not less than eight-tenths of the diameter of said circular aperture in said support, and the altitude of said conical portion being substantially one quarter of the diameter of its base, a cap of non-vibratile material rigidly secured to the apex of said conical portion of said tympanum, and a mechanical transmission through which the vibrations produced by the record are transmitted to the tympanum, whereby the tympanum imparts to the surrounding free air sound waves substantially corresponding in intensity to the recorded sound waves; substantially as described.

13. In a sound regenerating machine, a vibration transmission comprising two ponderous members, fulcra carried by said members, an articulate parallelogram of links and levers, the levers of said parallelogram mounted upon said fulcra, pressure exerting means acting between said members and tending through said fulcra to hold said parallelogram under tension, and a style holder carried by one of said levers; substantially as described.

14. In a sound regenerating machine, a vibration transmission comprising two ponderous members, guides for maintaining the relative positions of said members, fulcra carried by said members, an articulate parallelogram of links and levers, the levers of said parellelogram mounted upon said fulcra, pressure exerting means acting between said members and tending through said fulcra to hold said parallelogram under tension, and a style holder carried by one of said levers; substantially as described.

15. In a sound regenerating machine, a vibration transmission comprising two ponderous members, guides for maintaining the relative positions of said members, fulcra carried by said members, an articulate parallelogram of links and levers, the levers of said parallelogram mounted upon said fulcra, pressure exerting means acting between said members and tending through said fulcra to hold said parallelogram under tension, and a style holder carried by one of said levers; substantially as described.

16. In a sound regenerating machine, a vibration transmission comprising two ponderous members, a vertical fulcrum on one of said members, a horizontal fulcrum on the other of said members, an articulate parallelogram of links and levers, the levers of said parallelogram mounted upon said fulcra, and pressure exerting means acting between said members and tending through said fulcra to hold said parallelogram under tension; substantially as described.

17. In a sound regenerating machine, a vibration transmission comprising two ponderous members, fulcra carried by said members, an articulate parallelogram of links and levers, the levers of said parallelogram mounted upon said fulcra, pressure exerting means acting between said members and tending through said fulcra to hold said parallelogram under tension, a style-holder carried by one of said levers, a direct sound regenerating tympanum connected to another of said levers and a pivoted support for said transmission and said tympanum; substantially as described.

[fol. 209] 18. In a sound regenerating machine, a vibration transmission comprising a support, two ponderous members carried by said support, one of said members being movable upon said support, insulating material between said movable member and said support, fulcra carried by said members, an articulate parallelogram of links and levers, said levers being mounted on said fulcra and pressure exerting means acting between said members and tending through said fulcra to hold said parallelogram under tension; substantially as described.

19. In a direct sound regenerating machine, the combination of a bottomless cabinet having apertures on all sides and a horizontal partition therein, a record holder mounted upon and above said partition, a motor for driving said record holder, a right angled transmission support mounted to swing upon horizontal and vertical axes upon said par-

tition adjacent the periphery of said record holder, one arm of said support adapted to be swung over said record holder, and the other arm of said support extending downwardly through said partition, a vibration transmission mounted within and insulated from said transmission support and comprising two ponderous members carrying fulcra, a parallelogram of links and levers, said levers mounted upon said fulcra, pressure exerting means acting between said members and tending through said fulcra to hold said parallelogram under tension, a style-holder carried by one of said levers at the outer end of said transmission support, a spider mounted upon said transmission support below said partition, a ponderous tympanum support carried by said spider, a direct sound regenerating tympanum mounted upon said ponderous tympanum support, said tympanum being of light vibratile material and having a conical form throughout the greater part of its area and a positive connection between the apex of the conical portion of said tympanum and the inner end of the parallellogram of the said vibration transmission; substantially as described.

20. In a sound regenerating machine, a tympanum, a vibration transmission tensioned in the direction of its vibration independently of the tympanum and connected therewith, and a style holder connected with said transmission.

21. In a sound regenerating machine, an untensioned tympanum, a vibration transmission tensioned in the direction of its vibration and connected with said tympanum, and a style holder connected with said transmission.

22. In a sound regenerating machine, a tympanum, an oscillatory transmission member connected therewith, a style holder for oscillating the transmission member, and means independent of the tympanum for tensioning the transmission member in the direction of its oscillatory movement.

23. In a sound regenerating machine, a tympanum, an oscillatory transmission member connected therewith, a style holder for oscillating said member, and means independent of the tympanum for yieldingly imparting a tension to said member in the direction of its oscillatory movement.

24. In a sound regenerating machine, an untensioned tympanum, a transmission member connected therewith

and adapted for oscillation, a style holder for oscillating said member, and means for imparting a tension to said member in the direction of its oscillatory movement.

25. In a sound regenerating machine, a style holder, a tympanum having a rigid vibratory portion, and a tensioned transmission connecting the style holder with said rigid portion, the tension of said transmission being in the direction of its vibration and independent of the tympanum.

26. In a sound regenerating machine, a style, a tympanum, and tensioned transmission means connecting the style and tympanum and having means for imparting vibrations to the tympanum having no greater length than the vibrations of the style, the tension of said transmission beng in the direction of its vibrations and independent of the tympanum.

27. In a sound regenerating machine, a tympanum having a vibratile area of sufficient size to effect, without amplification, the regeneration from a record of sound waves of relatively large volume and carrying power, and tensioned vibration transmitting means connected to the tympanum and adapted to be actuated by a style, the tension of the transmission being in the direction of its vibration and not extending to the tympanum.

28. In a sound regenerating machine, a tensioned vibration transmission, a style-holder upon one end of said transmission and an untensioned tympanum connected with the opposite end of said transmission, the tension of the transmission being in the direction of its vibration; substantially as described.

29. In a sound-regenerating machine, a vibratile conical tympanum of large area rigidly supported at its periphery and freely exposed to unconfined air, a sound-vibrated element, and vibration transmission means connecting said element and said tympanum and arranged to impart to the tympanum vibrations which are relatively much shorter than the vibrations imparted to the said element.

30. In a sound-regenerating machine, a vibratile conical tympanum rigidly supported at its periphery and freely ex- [fol. 210] posed to unconfined air, a sound-vibrated element, and vibration transmission means connecting said element and said tympanum arranged to impart to the tympanum vibrations which are relatively much shorter than

the vibrations imparted to the said element; the tympanum having an area sufficiently large to effect, without amplification, sound waves of large volume and carrying power.

31. In a sound-regenerating machine, a vibratile conical tympanum of large area, rigidly supported at its periphery and freely exposed to unconfined air, a sound-vibrated element, and tensioned transmission means connecting said element and said tympanum and arranged to impart to the tympanum vibrations which are relatively much shorter than the vibrations imparted to the record end of the style.

In testimony whereof I affix my signature, in presence of two witnesses.

Marcus C. Hopkins.

Witnesses: M. A. Bill, Leon W. Rosenthal.

Corrections in Letters Patent No. 1,271,527

It is hereby certified that in Letters Patent No. 1,271,527, granted July 2, 1918, upon the application of Marcus C. Hopkins, of Jersey City, New Jersey, for an improvement in "Sound-Regenerating Machines," errors appear in the printed specification requiring correction as follows: Page 1, line 25, for the word "magaphone" read *megaphone;* page 5, lines 75 and 95, claims 7 and 8, and page 6, line 25, claim 11, for the word "long" read *large;* and that the said Letters Patent should be read with these corrections therein that the same may conform to the record of the case in the Patent Office.

Signed and sealed this 28th day of September, A. D., 1920.

M. H. Coulston, Acting Commissioner of Patents.
(Seal.)

Cl. 274—16.

[fol. 211] 2—421

1913

Contents.

1. Application, papers.
2. Rejection Sept. 9, 13.
3. Amdt. A. & Sup. Oaths, Dec. 24/13.

4. Rej. Feb. 7, 1914.
5. Amdt. B. Feb. 6/15.
6. Rej. Feb. 23, 1915.
7. Amdt. C. Feb. 23/16.
8. Rej. March 4, 1916.
9. Amdt. I. Mar. 28/16.
10. Letter April 1, 1916.
11. Amdt. E. Apl. 6/16.
12. Renewal Mar. 22/18.
13. Amdt. F. 3/29/18.
14. Lett. Apr. 5, 1918.
15. Letter (per address) 4/18/18.
16. Amdt. G. 4/18/18.
17. Notice of Suit—Nov. 12—1924.
18. Notice of Suit—Feb. 18—1925.
19. Notice of Suit—May 26—1925.
20. Notice of Suit—Nov. 3—1925.
21. .....
22. .....
23. .....
24. .....
25. .....
26. .....
27. .....
28. .....

[fol. 212] 29. .....

30. .....
31. .....
32. .....
33. .....
34. .....
35. .....
36. .....
37. .....
38. .....
39. .....
40. .....
41. .....
42. .....
43. .....
44. .....
45. .....

M. C. HOPKINS.

SOUND REGENERATING MACHINE.

APPLICATION FILED JULY 14, 1913. RENEWED MAR. 22, 1918.

1,271,527. Patented July 2, 1918.

3 SHEETS—SHEET 1.

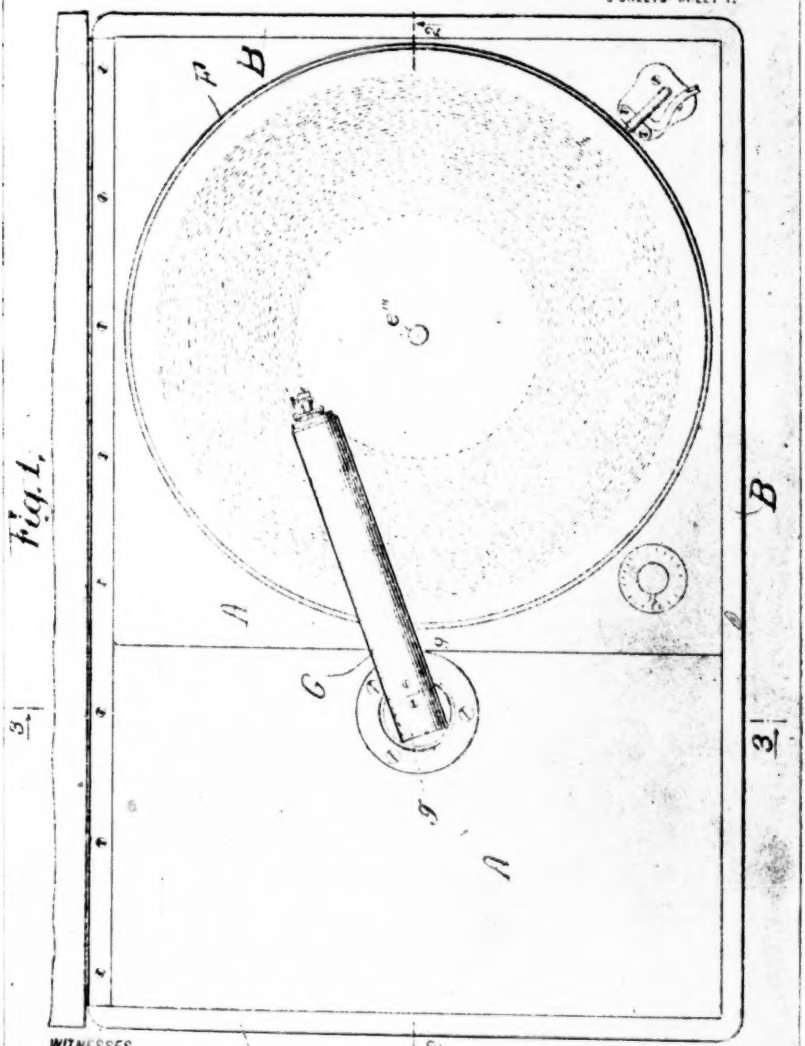
Fig. 1.
B
B
C
C
C

M. C. HOPKINS.

SOUND REGENERATING MACHINE.

APPLICATION FILED JULY 14, 1913. RENEWED MAR. 22, 1918.

1,271,527. Patented July 2, 1918

5 SHEETS—SHEET 2

Fig. 2.

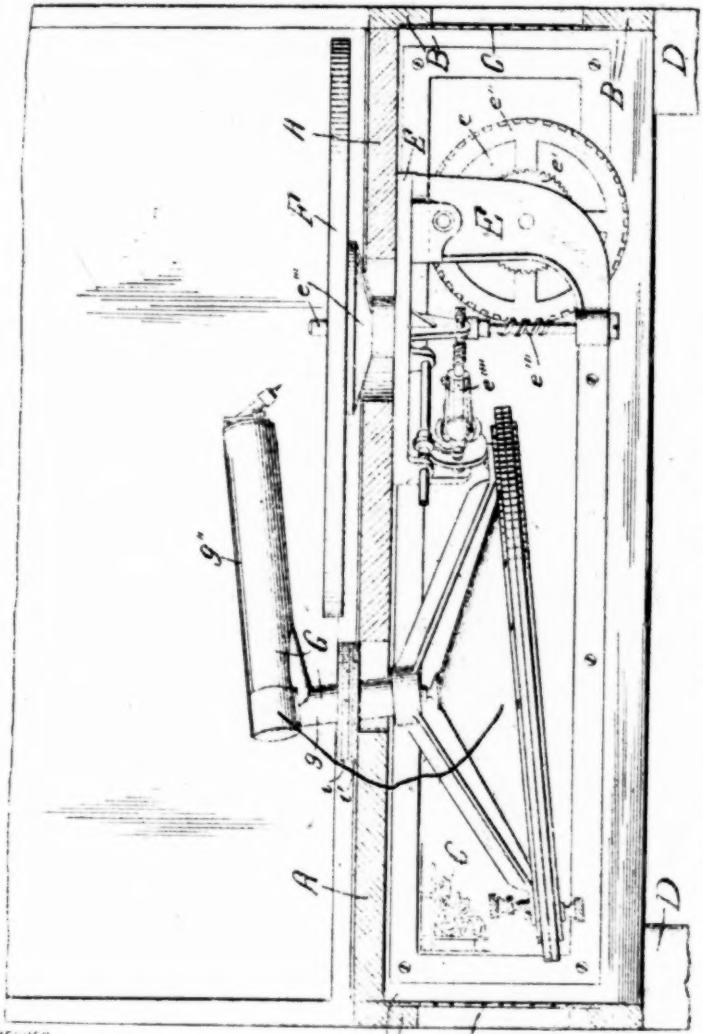

WITNESSES

Leon H. Rosenthal

M. A. Bell

INVENTOR

Marcus C. Hopkins

BY

Pennie Davis & Goldsborough

ATTORNEYS

M. C. HOPKINS.

SOUND REGENERATING MACHINE.

[illegible] JULY 14, 1913. RENEWED MAR. 22, 1918.

1,271,527. Patented July 2, 1918.

[illegible] 5 SHEETS-SHEET 3.

Fig. 3.

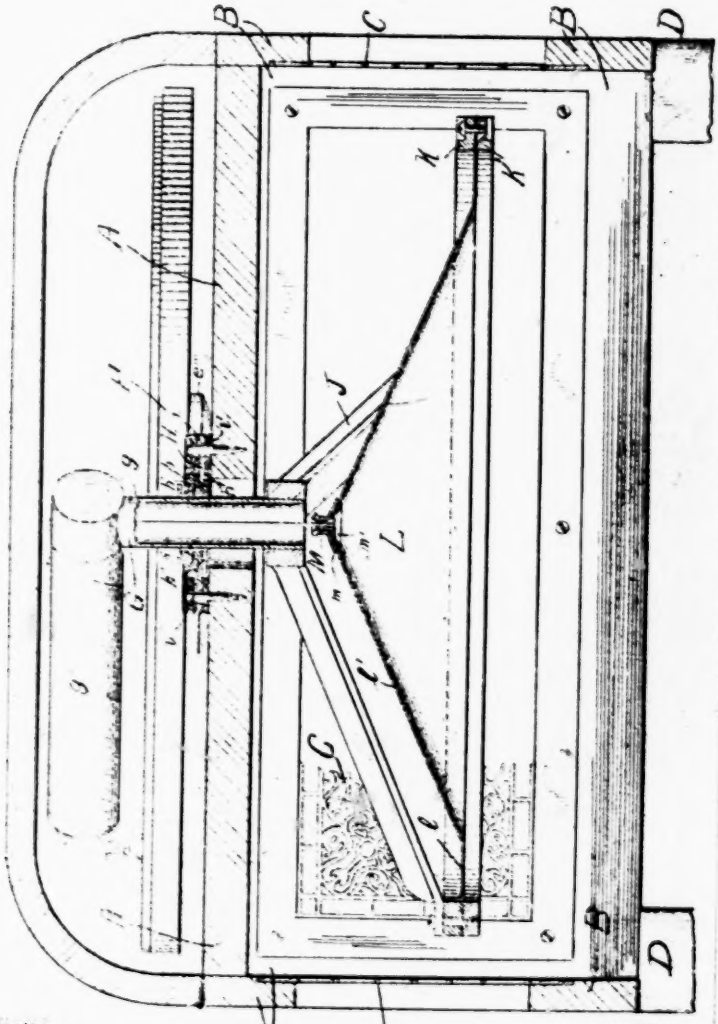

WITNESSES

Leon A. Rosenthal

M. A. Bell

INVENTOR

Marcus C. Hopkins

BY

Prince, Grant & Gladwright

ATTORNEYS

M. C. HOPKINS.

SOUND REGENERATING MACHINE.

APPLICATION FILED JULY 14, 1913. RENEWED MAR. 22, 1918.

1,271,527. Patented July 2, 1918.

3 SHEETS—SHEET 1.

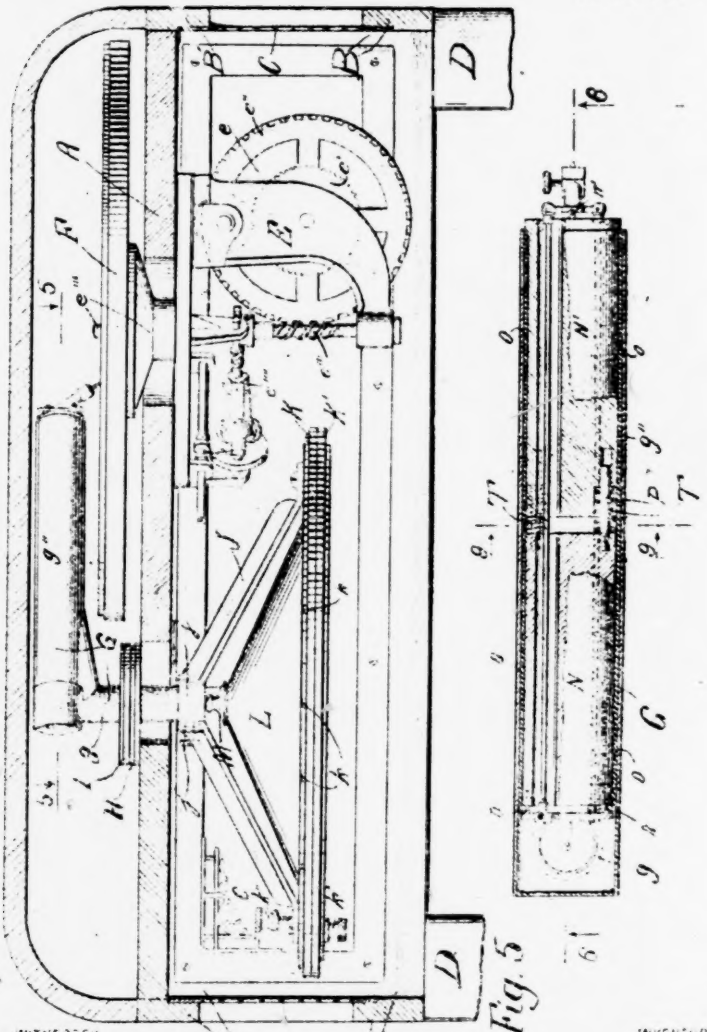

WITNESSES

INVENTOR

MARCUS C. HOPKINS

BY

ATTORNEYS

M. C. HOPKINS.

SOUND REGENERATING MACHINE.

APPLICATION FILED JULY 14, 1913. RENEWED MAR. 22, 1918.

1,271,527. Patented July 2, 1918.

5 SHEETS—SHEET 5.

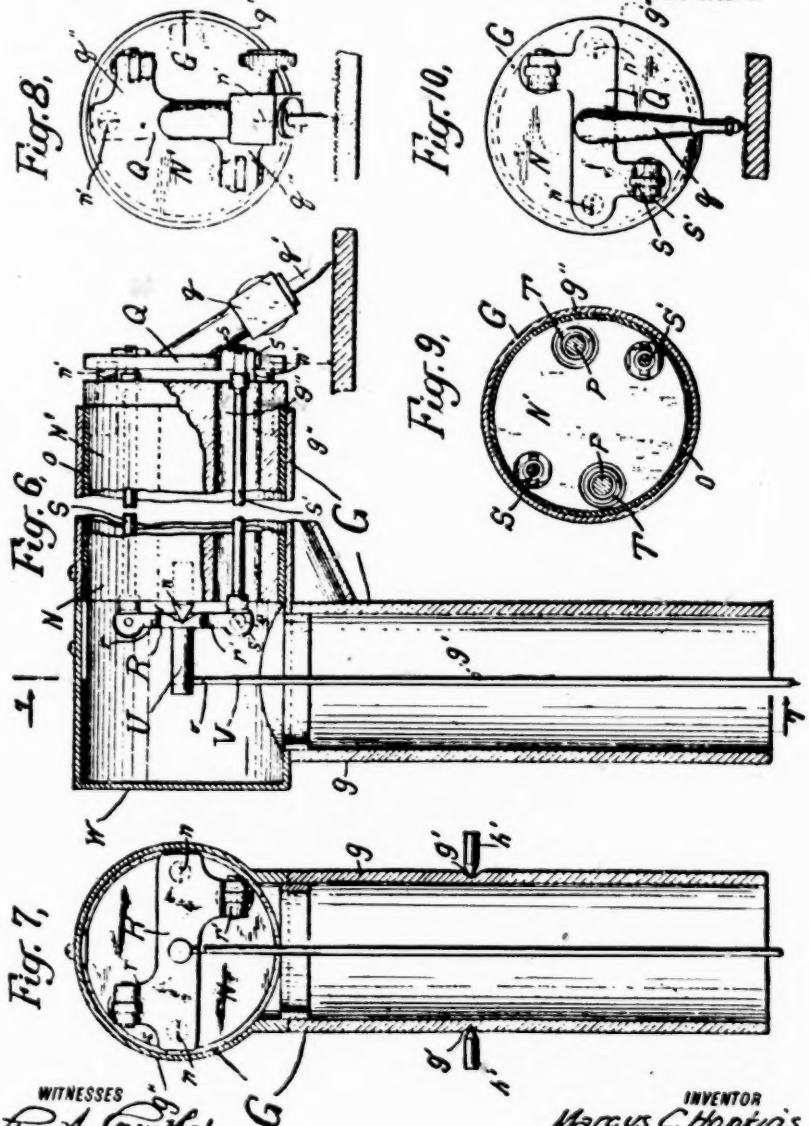

WITNESSES

Leon A. Rosenthal

M. A. Bill

INVENTOR

Marcus C. Hopkins

BY

Pennie Davis & Glasmough

ATTORNEYS

46. .....
47. .....
48. .....
49. .....
50. .....

778826—108

(Here follow drawings, side folios 213, 214, 215, 216, and 217)

[fol. 218] [Endorsed:] No. 1726. United States District Court. Lektophone vs. Rola. Pltfs. Exhibit No. 7. Filed 5/10/28. Walter B. Maling, Clerk. By A. C. Aurich, Deputy Clerk.

No. 5712. United States Circuit Court of Appeals for the Ninth Circuit. Filed Feb. 5, 1929. Paul P. O'Brien, Clerk.

[fol. 219] PLAINTIFF'S EXHIBIT No. 25

PLAINTIFFS EXHIBIT P 17

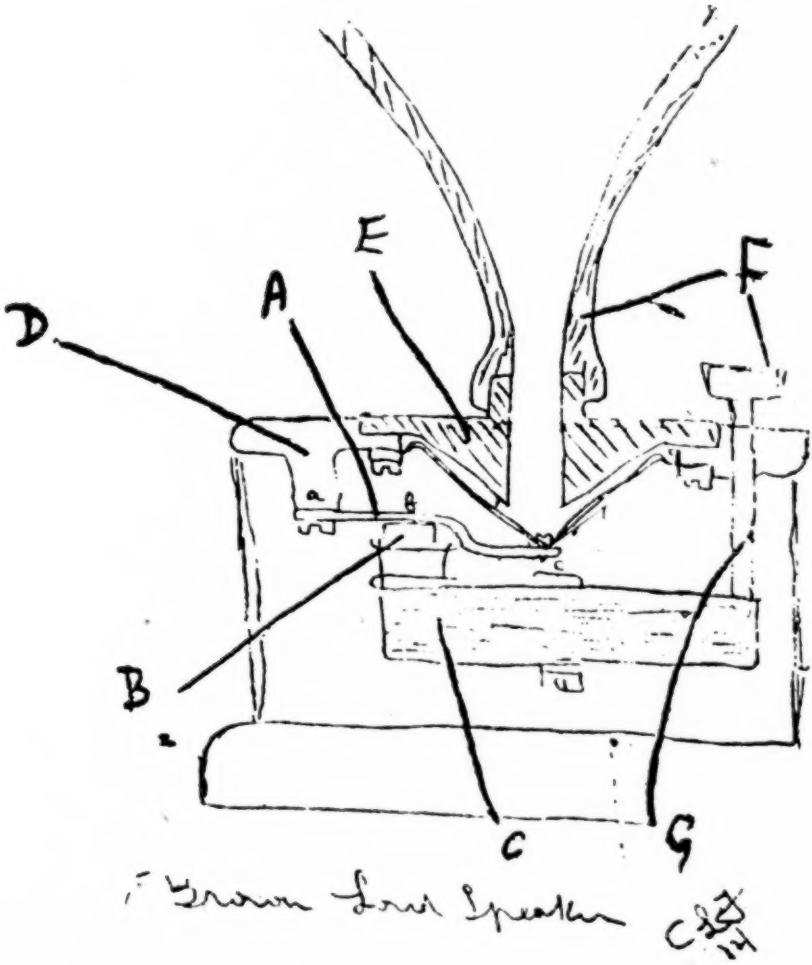

[Endorsed:] No. 1726. United States District Court. Lektophone vs. Rola. Pltfs. Exhibit No. 25. Filed 5/11/28. Walter B. Maling, Clerk. By A. C. Aurich, Deputy Clerk.

No. 5712. United States Circuit Court of Appeals for the Ninth Circuit. Filed Feb. 5, 1929. Paul P. O'Brien, Clerk.

[fol. 220] DEFENDANT'S EXHIBIT No. 9

[Endorsed:] No. 1726. United States District Court. Lektophone vs. Rola. Defendant's Exhibit No. 9. Filed

5/10/28. Walter B. Maling, Clerk. By A. C. Aurich, Deputy Clerk. No. 5712. United States Circuit Court of Appeals for the Ninth Circuit. Filed Feb. 5, 1929. Paul P. O'Brien, Clerk. Lektophone vs. Rola.

Copies of Patents Set Up in Answer

United States Patents

Number.	Date.	Patentee.
216,051	June 3, 1879	Maxwell
252,024	Jan. 10, 1882	Farrington
254,642	Mar. 7, 1882	Hale
599,867	Mar. 1, 1898	Rogers
654,360	July 24, 1900	Schopf
674,575	May 21, 1901	Duwelius
822,024	May 29, 1906	Shanks
857,209	June 18, 1907	Smith
890,142	June 9, 1908	Kraemer
963,362	July 5, 1910	Edison
986,477	Mar. 14, 1911	Lumiere
1,036,529	Aug. 20, 1912	Lumiere
1,064,062	June 10, 1913	English
1,096,676	May 12, 1914	Brown
1,180,401	Apr. 25, 1916	Johnson
1,182,078	May 9, 1916	Elfering
1,192,289	July 25, 1916	English

[fol. 221]

British Patents

Number.	Date.	Patentee.
9,712	1898	Lodge
9,418	1899	Stroh
3,393	1901	Stroh
15,060	1904	Simon, et al.
8,011	1906	Szek, et al.
8,833	1907	Hough
1,194	1908	Curteis
17,827	1909	Zappert
26,738	1909	Rosenthal
15,675	1910	Lyons
29,833	1910	Rogers
1,157	1911	Brown

French Patents

Number.	Date.	Patentee.
127,180	1878	Ader
331,226	1903	Gaumont et Cie.
362,926	1906	Welton
397,609	1908	Persichetti

German Patents

183,685	1906	Muller
220,412	1909	Otto

"Talking Machine News," title page and pages 243 and 244.

(Here follows drawing, side folio 222)

[fol. 223] United States Patent Office

Joseph W. Maxwell, of Louisville, Kentucky

Improvement in Mechanical Telephones

Specification Forming Part of Letters Patent No. 216,051, Dated June 3, 1879; Application Filed November 7, 1878

To all whom it may concern:

Be it known that I, Joseph W. Maxwell, of the city of Louisville, county of Jefferson, and State of Kentucky, have invented certain Improvements in Telephony, of which the following is a specification.

Whereas in an application made by myself for Letters Patent of the United States, filed in the United States Patent Office on the 14th day of October, 1878, for improvement in telephony, I have shown and described an apparatus (among other things) consisting of two sounding-boards and their vibrators, of the same construction and material, placed together apex to apex, apart a few inches only, on the same transmitting-wire, and connected together by another short wire, which extends from the apex of one to the apex of the other, the means of fastening being knots formed on the extremities of the short wire after they had been extended through the vibrators; one apparatus consisting of this

J. W. MAXWELL.
Mechanical-Telephone.

No. 216,051. Patented June 3, 1879.

Fig. 1.

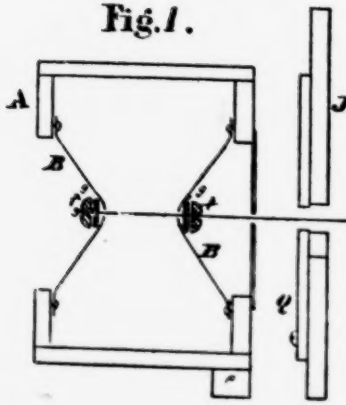

Fig. 2.

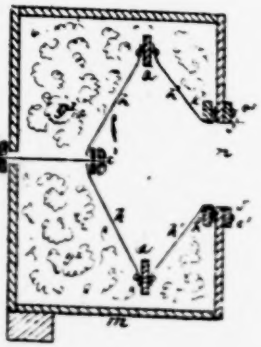

Witnesses.
A. M. Stout
F. B. Webb

Inventor,
J. W. Maxwell.

combination of parts is placed at each end of a long transmitting-wire, which is passed through the centers of the vibrators, and over and along which vibrations of air or sounds are transmitted from one end of the line to the other, and each apparatus is held to its connection with the wire by a button on each end thereof, and the wire is held taut or otherwise, as the one apparatus may be moved to or from the other.

The sounding-boards may be made of soft pine wood, or any other suitable material, and should have openings in their central portions, over which the vibrators are to be fastened, and should be mounted upon suitable supports or inclosed in suitable boxes, and should be made quite thin, in order to increase their capacity for vibration; and the vibrators are made of sheep-skin or like material, and should be fastened upon the sounding-boards over the openings therein while in a wet and plastic condition, and then have their central portions drawn out and stretched until they assume a funnel-like form, and then be allowed to dry and retain that form.

Now my invention herein claimed relates to the construction of a vibratory apparatus of quite different form and of a much better result from the one hereinbefore described.

It consists, to some extent, of an inclosing-box, within which the vibrators are operated, the box having a suitable opening in and through the end of it which is opposite to the other end of the line of communication, into which vibrations are received and out of which they are delivered; but the apparatus proper consists of two diaphragms of vibrators of the same material before mentioned, and one of them of exactly the same form, and the other of the same general form, but having a central opening in it, to correspond in form and size with the one in the end of the containing-box before mentioned; and these two vibrators, which are in a circular form, by their outer edges are fastened to and upon the two opposite sides of a thin board of soft pine wood, or other vibratory wood or material, with their concave sides next to each other, and the board is cut away in the center, so as to leave a large opening in circular form in it, and the residue of the board serves as a frame for the two vibrators to hold their outer edges distended, and it does not touch the containing-box at all; and the one of the vibrators having the opening in it has the

edge around the opening fastened upon another board, which has also an opening in it, corresponding in size and form with the one in the vibrator and the one in the end of the containing-box, and the board is attached to the inside of the end of the box, so that the openings in the vibrator, board, and box constitute an avenue for the reception and delivery of air-vibrations into and out of the apparatus. The transmitting-wire is passed in through the opposite end of the box, and through the apex of the vibrator that has no central opening in it, and is there held by a button on the end of it on the inside of the vibrator, and when the wire is stretched taut both vibrators are stretched and held taut likewise, and the whole apparatus is held suspended upon the wire at one apex, and the attachment to the board (which is attached to the end of the box) at the other, and the result of this construction is a high degree of vibratory power.

My said invention will be more particularly described with reference to the accompanying drawings, in which Figure 1 represents a central vertical longitudinal section of the said apparatus described in my said application filed [fol. 224] October 22, 1878; and Fig. 2, a like view of the containing box and operative parts of this my improvement claimed herein.

In Fig. 2, a indicates the board to which the outer edges of the vibrators are fastened; h, the vibrator, attached to the transmitting-wire T by the button e and h'; the other one of said vibrators, and the same which has the central opening, n, in it; and k, the board to which that vibrator is attached by the edge around its opening, and it is fastened upon the inside of the end of the box, so that the opening at n is through vibrator, board, and box. g' indicates the cotton or wool placed around the vibrators within the box, in order to destroy the ring of the wire T. The vibrators are stretched and held taut by means of the button e on the wire T; and but for the button i on the wire outside of the box the vibrators would collapse when the wire was relaxed.

In this construction it will be observed that a large portion of the apparatus is made of the sheep-skin or other animal membrane, and there is in it no more of wood, which is itself capable of a high degree of vibration, than enough for a frame to hold the vibrators in position and proper shape, and that it is therefore very efficient for the

(No Model.)

G. K. & H. C. FARRINGTON.

MECHANICAL TELEPHONE.

No. 252,024. Patented Jan. 10, 1882

Fig. 1.

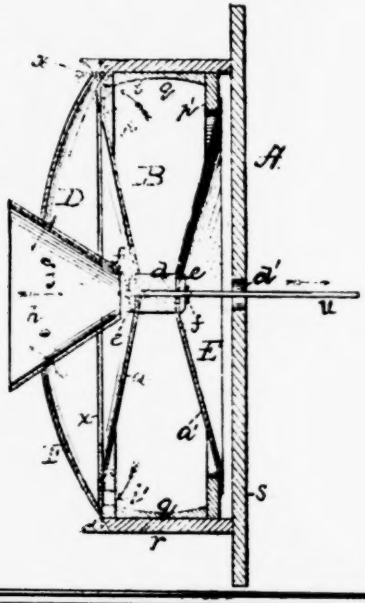

Fig. 2.

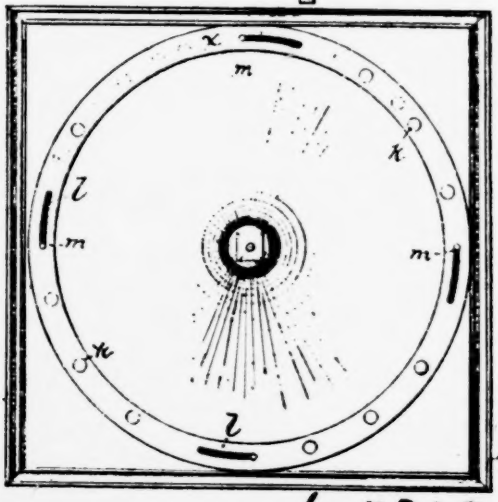

Attest:
J. W. Fowler.
A. G. Heylmun.

Inventors;
George K. Farrington
Homer C. Farrington.
By Wm Freedom Lyonage
attys.

purpose of condensing and strengthening air-vibrations for transmission, and I have found it to be so by actual experiment, much more so than the one shown in Fig. 1.

I have found also by experiment that a vibrator that is from seven to eight inches in diameter through the center from one outer edge to the other is the most efficient, and that when they are much smaller than this the vibrations made by the vocal organs are of a nasal character; but when an apparatus of proper size is used at one end of the line, then a much smaller one may be used at the other without impairing perceptibly the effect.

A very good effect is secured by using the construction shown in Fig. 2 at one end of the line, and that shown in Fig. 1 at the other.

What I claim as my invention, and desire to secure by Letters Patent, is—

The vibratory apparatus composed of the vibrator h and the vibrator h′, having the opening n, and the suspended board a and the fixed board k′, constructed and arranged substantially as and for the purpose described.

J. W. Maxwell.

Witnesses: I. M. Stephens, A. M. Stout

(Here follows drawing, side folio 225)

[fol. 226] United States Patent Office

George K. Farrington and Homer C. Farrington, of Kirksville, Missouri, Assignors of One-third to Bradford S. Potter, of Shippensburg, Pennsylvania

Mechanical Telephone

Specification Forming Part of Letters Patent No. 252,024, Dated January 10, 1882. Application Filed September 14, 1881. (No model.)

To all whom it may concern:

Be it known that we, George K. Farrington and Homer C. Farrington, citizens of the United States of America, residing at Kirksville, in the county of Adair and State of Missouri, have invented certain new and useful Improvements in Mechanical Telephones, of which the following is a speci-

fication, reference being had therein to the accompanying drawings.

Figure 1 is a vertical section of our improved telephone; Fig. 2, a front view of the same with the sound-collector and mouth-piece removed.

Like letters refer to like parts in each figure.

This invention relates to improvements in the class of telephones termed "mechanical," in which the transmission of a sound-wave or tone depends entirely upon the vibration of the sound-wave conducted by wire or other substance.

It is a well-established fact in physics that if two tuning-forks having the same pitch stand near each other and one be made to vibrate the other will vibrate also, giving forth the same note or tone, because it responds readily to corresponding wave-lengths in the air; but if they have a different pitch or are not in unison and are placed in the same position and one be made to vibrate the other will not respond, because it does not vibrate with the same wave as the air or sound wave that strikes upon it.

The object of our invention, therefore, is the construction of a telephone in which the diaphragms can be rendered uniform in pitch and vibration, and so arranged in position that the sound-wave, in its impact upon the diaphragms, is magnified or intensified in the transmitting and receiving instruments, thereby producing a clear and distinct repetition of sounds from one instrument to the other.

The nature of our invention will be herein described fully, and then pointed out in the claims.

In the annexed drawings, the letter A represents a suitable box or casing, having attached thereto the diaphragms a a′, which are drawn into a concavo-convex shape by means of the buttons e e, drawn together by screw-tap f on the conducting-wire u. These diaphragms are firmly secured at their outer rim or edge to the framing p p′, said framing being held in place by ends r and sides s of the box. The box, diaphragms, and frames form an air-chamber, B, and are provided with segmental blocks q, inserted above and below, to overcome sharp angles of corners to render the sound more smooth.

The letter D represents a sound-collecting chamber, formed by the curved cover F and the diaphragm a, with its framing p, in which is inserted a mouth-piece, h, having a number of holes, j, in its surface, opening into the sound-

chamber, as shown, and through which air-vibrations are transmitted to the ear. The mouth piece h converges with a hole over the button e on the diaphragm. There are also communicating openings i i from air-chamber B into sound-collector chamber D, said openings being opened or closed by a circular valve or plate, x x, having counter-openings therein, as shown at k k k, Fig. 2, which are brought over the holes i i i at pleasure by moving the valve by the knob or projection, the valve turning on pins m m m m in slots l l l l.

The letter E represents an air-chamber formed by diaphragm a', and back of the box and sides s s r r.

The letters d d' represent corks or other insulating substances, through which the conducting-wire passes, and which serve to regulate the excessive vibration of the diaphragms and the twanging sound of the wire. The cork d' also closes the chamber E, rendering it a dead-air chamber, the same as B when the valves are closed.

The diaphragms are brought to the same degree of tension by the screw-top f, and being of the same size and texture and shape (concavo-convex) and on the same degree of tension, the vibration or impact of sound upon one is taken up by the other and transmitted by the conducting wire or cord to the other instrument.

In transmitting sounds the air-chamber B is closed, the air-chamber in the receiving-instrument being open, and vice versa. The air-chambers B and E both being closed when transmitting sounds and containing inert air, but subject to expansion and contraction by the impact of the sound-wave and alternation upon the diaphragms, the force [fol. 227] or intensity of the wave is increased or magnified to an extent that a whisper at one instrument is heard in a clear and audible whisper at the other, though a long distance may intervene between the two instruments connected by a wire or other conducting substance. The two telephones are brought in unison of vibration by using a straight conducting-wire between the same at a convenient distance and adjusting the diaphragms with the screw-tap until a clear and equal tone or wave length is received or given off by each.

The diaphragms are made of parchment, skin, or other suitable material, and have a vibrating surface seven or eight inches (more or less) in diameter each. Diaphragms,

however, can be made of metal, animal, or vegetable substances.

The conducting-line may be made of copper, steel, or galvanized-iron wire, or hemp or linen cord.

Having thus described our invention, what we claim as new, and desire to secure by Letters Patent, is—

1. In a telephone, the double concavo-convex-shaped diaphragm, of the same size, material, and texture and degree of tension, in combination with the conducting-wire, buttons, adjusting screw-tap, and insulating-cork, substantially as described.

2. In a telephone, the combination of the diaphragms, a a′ and framing p, with openings i, forming the front and rear walls of an air-chamber, substantially as set forth.

3. In a telephone, the combination, with the diaphragms a a′ and framing p, with openings i, of a valve-plate for opening or closing the openings in the framing p, substantially as and for the purpose set forth.

4. In a telephone, the combination of the chambers D, B, and E, formed by the casing A, diaphragms a a′, and curved cover F, substantially as shown and described.

5. In a telephone, the combination, with the curved cover F, diaphragm a, and transmitting-wire, of the mouth-piece h, with its inner open end registering over the button e of the transmitting-wire, and provided with a plurality of openings, j.

6. The combination, in a telephone, of the curved cover F, mouth-piece h, diaphragm a, perforated framing p, slid-in valve x, diaphragm a, casing A, and transmitting-wire, substantially as described.

In testimony whereof we affix our signatures in presence of two witnesses.

George K. Farrington, Homer C. Farrington.

Witnesses: Charles Still, Henry W. Eckert.

(Here follows drawing, side folio 228)

(No Model.)

W. B. HALE.

TELEPHONIC RECEIVING INSTRUMENT.

No. 254,642. Patented Mar. 7, 1882.

Fig. 1.

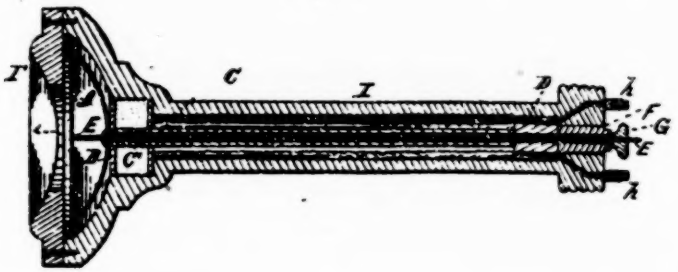

Fig. 2.

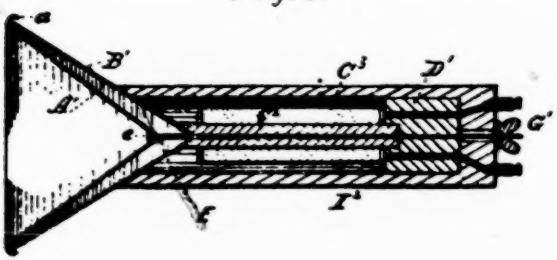

Witnesses
Phil. W. Hale
Charles E. Burdett

Inventor.
William B. Hale

[fol. 229] United States Patent Office

William B. Hale, of Washington, District of Columbia, Assignor to the United States Telephone Manufacturing Company, of New York, N. Y.

Telephonic Receiving-instrument

Specification Forming Part of Letters Patent No. 254,642, Dated March 7, 1882. Application filed July 26, 1881. (No model.)

To all whom it may concern:

Be it known that I William B. Hale, a citizen of the United States, residing at Washington, in the District of Columbia, having invented certain new and useful Improvements in Telephonic Receiving-Instruments; and I do hereby declare the following to be a full, clear, and exact description of the invention, such as will enable others skilled in the art to which it appertains to make and use the same, reference being had to the accompanying drawings, and to the letters or figures of reference marked thereon, which form a part of this specification.

This invention relates to a telephonic receiving-instrument in which the vibrations of a diaphragm are caused by the action thereupon of an iron or steel core, which lengthens and shortens under the influence of electric currents traversing a surrounding coil of wire.

A telephonic receiver of this class has heretofore been invented in which the core acts directly upon the center of a diaphragm which is confined at its periphery.

The object of my invention is to give a more effective vibration to the diaphragm, and to concentrate the air-vibrations produced thereby. This I accomplish by confining the diaphragm at a single central point only and exerting upon its outer margin the mechanical force which causes it to vibrate, this margin being left free to move in response to the action of the core.

In the accompanying drawings, Figure 1 is a central longitudinal section of a telephonic receiving-instrument constructed according to my invention, and Fig. 2 is a similar section of a modification thereof.

Referring to Fig. 1, the letter A indicates a diaphragm of any suitable material, either magnetic or non-magnetic—say, for instance, thin sheet metal, mica, hard rubber, or wood. The margin of this diaphragm rests freely against the edge of a cup, B, which has at its center an aperture, in which is screwed one end of a hollow or tubular core, C, of either iron or steel, which core has its other end abutted against a block of lead, D, which is bored centrally.

To the center of the diaphragm is secured one end of a non-magnetic rod, E, which extends through the tubular core C, the lead block D, and a washer, F, and has its other end screw-threaded to receive a thumb-nut, G, by which its strain upon the diaphragm may be regulated.

The letter C′ indicates a coil of wire surrounding a portion of the hollow core C, and having its terminals connected respectively with the binding-posts h, arranged at the end of the case I, in which the described parts are inclosed, said case having a front ear-piece, I′, with a central aperture, i, through which the air-vibrations pass outward from the diaphragm A.

It is known that when an electric current traverses a coil of wire which includes an iron or steel core the core expands, and resumes its normal position as the circuit is made or broken or the current is varied in strength. When, therefore, an electrical current is caused to traverse the coil C′, the core C elongates, driving the edge of the cup B against the margin of the diaphragm A, giving said diaphragm an outward half-vibration all around the central point which is confined by the rod E; and if the current ceases to flow, or its strength is decreased, the core C contracts wholly, or in proportion to the decrease in the strength of the current, drawing backward the cup B, allowing the diaphragm to resume or approach its normal position. When an electrical current is transmitted over the coil C′ by means of any suitable telephonic transmitting apparatus the lengthening and shortening of the core C, and consequently the vibrations of the diaphragm A, correspond to the variations of the current, the air vibrations or undulations emanating from the diaphragm producing sounds similar to those which cause the action of the transmitting apparatus.

It will be understood that when the current ceases in the coil or its strength becomes less, the core does not shorten to less than its normal length, but simply resumes or approaches that length, and therefore the diaphragm does not move rearwardly on its return vibration beyond its normal position. It therefore has no tendency toward an out- [fol. 230] wardly-convex form; but by the action of the edge of the cup upon its margin it is concaved rather toward a central line, this action tending to cause a convergence of the air-vibrations, resulting in the production of louder sounds than is the case where the center of the diaphragm is projected outward, giving the diaphragm a convexity tending to disperse the air vibrations or undulations.

The abutment D, I make of lead, because that metal is magnetically inert and non-vibratory, so that it is a perfect stop for the core C, the effective lengthening of which therefore takes place in the direction of the diaphragm.

In the modification illustrated in Fig. 3, the diaphragm is formed with an especial view to the condensing of the air vibrations or undulations toward a focus.

The letter A′ designates a hollow conical diaphragm having a flange, a, against which rests the base edge of a surrounding larger hollow cone, B′, having an opening in its apex in line with an opening in the apex of the center of the diaphragm A′.

The letter C^2 denotes the hollow core of an electro-magnet, of which C^3 is the coil. The core C^2 has one end bearing against the end of the cone B′, and the other end abutted against the end of a centrally-bored cylinder, D′, of lead, and preferably arranged in a socket or countersink in said cylinder.

A non-magnetic tension-rod, E′, (preferably of brass or other metal of considerable tensile strength, and not appreciably or but little affected by electric currents,) has a head, e, fitted snugly in the tip of the diaphragm A′, and extends through the same and through the opening of the cone B′, the hollow core C^2, and the bore of the lead cylinder D′, having a screw-threaded portion extending beyond said cylinder and through the end of the case I^2, outside of which it is provided with a thumb-nut, G′, and a suitable washer. The thumb-nut being screwed up to press its washer firmly against the case, the flange a is drawn against the edge of

the cone B^2, the tip of which is pressed against the adjacent end of the core C^2, the other end of which is drawn against the lead cylinder. The force with which the parts are thus pressed together is regulated by the thumb-nut, and should be such (as also in the form shown in Fig. 1) that none of the effect of the elongation of the core will be lost. When, now, electric currents of proper character are passed over the coil C^3, the core C^2 will be elongated and contracted in correspondence with said currents, driving the edge of the cone B′ against the flange a of the diaphragm, causing said diaphragm to vibrate and generate from its surface air vibrations or undulations, which converge toward a common focus, their united sound-producing effect being more intensified as the lines of vibration approach their ultimate point of convergence.

What I claim is—

1. In a telephonic receiving-instrument, the combination, with a diaphragm which is fixed at its center, but capable of vibrating at its perimeter and between its perimeter and center, of an electro-magnet having its core fixed at one end, and mechanical means for transmitting motion from the other end of said core to the margin of the diaphragm when said core is caused to expand by the influence of electric currents, substantially as described.

2. In a telephonic receiving-instrument, the combination, with a vibratory diaphragm having its center confined, of an electro-magnet having its core provided with an extension impinging against the margin of said diaphragm and arranged to cause the same to vibrate in response to the action of the core under the influence of electric currents traversing the coil of the magnet, substantially as described.

3. In a telephonic receiving-instrument, the combination, with the vibratory diaphragm, of an electro-magnet having a tubular core provided with an extension impinging against the margin of said diaphragm, a rod having one end secured to the center of said diaphragm and passing through the tubular core of the magnet, its other end being fixed, and a suitable stop for the end of the core opposite to that next the diaphragm.

4. The combination, with a suitably-supported concave diaphragm, of the tubular core of an electro-magnet ar-

(No Model.)

J. H. ROGERS.

TELEPHONE TRANSMITTER.

No 599,867 Patented Mar. 1, 1898.

Fig. 1.

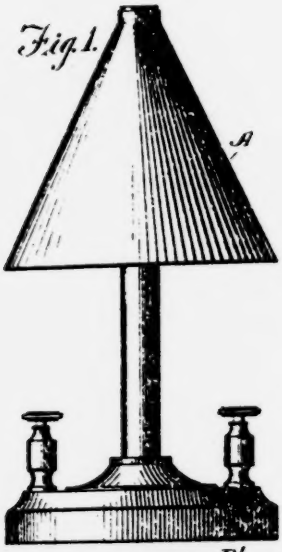

Fig. 2.

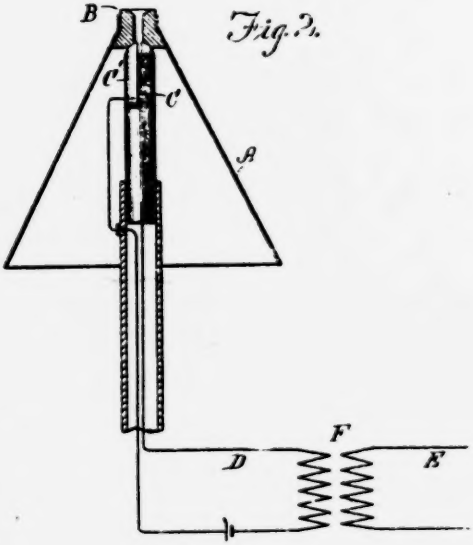

Fig. 3.

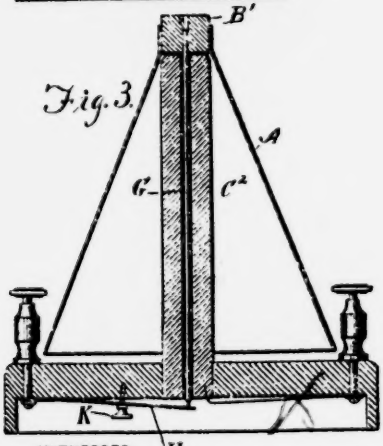

Fig. 4.

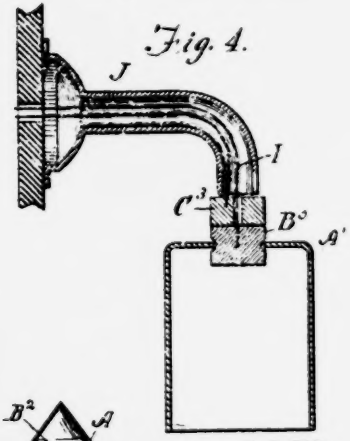

Fig. 5.

WITNESSES:

C. L. Belcher

H. H. Capel

INVENTOR

James H. Rogers

BY

A. L. Sommond

ATTORNEY

ranged to bear against said diaphragm, a rod extending from the apex of said diaphragm through the core of the magnet, and arranged to hold the center of the diaphragm in a fixed position with relation to the core, substantially as described.

5. The combination, with the vibratory diaphragm, of an electro-magnet having a tubular core, one end of which is provided with an extension bearing against the margin of said diaphragm, and the other end resting against a magnetically inert support, a rod secured to the center of said diaphragm and extending through the tubular core of the magnet, and arranged to hold the center of the diaphragm in a fixed position with relation to the core, substantially as described.

In testimony whereof I affix my signature in presence of two witnesses:

William B. Hale.

Witnesses: Wm. H. Bates, Charles E. Buell.

(Here follows drawing, side folio 231)

[fol. 232] United States Patent Office

James Harris Rogers, of Bladensburg, Maryland

Telephone-Transmitter

Specification forming part of Letters Patent No. 599,867, dated March 1, 1898. Application filed March 9, 1897. Serial No. 626,572. (No model.)

To all whom it may concern:

Be it known that I, James Harris Rogers, a citizen of the United States, and a resident of Bladensburg, in the county of Prince George's and State of Maryland, have invented a certain new and useful Telephone-Transmitter, of which the following is a specification.

This invention relates to telephone-transmitters, and particularly to electrical transmitters in which a variation in the extent of contract between the electrodes is depended upon for the transmission of electrical impulses or undula-

tions corresponding to the vibrations of undulations of the air caused by vocal or other sounds.

The object of this invention is the production of a reliable, convenient, and inexpensive transmitter; and to this end the invention consists in the construction, combination, and arrangement of parts hereinafter fully described and set forth in the claims.

In the accompanying drawings, which form a part of this specification, Figure 1 represents in side elevation one form of the improved transmitter. Fig. 2 represents in vertical section the effective parts of the transmitter and also shows diagrammatically its connection in circuit. Fig. 3 shows a modification of that form of transmitter adapted for use upon a table or desk. Fig. 4 represents a modification in the transmitter and shows it attached to a wall-bracket. Fig. 5 represents a modification in the construction of the electrodes.

In transmitters heretofore constructed diaphragms or membranes for receiving the impact of sound-waves have been connected to movable electrodes, but have been confined in one way or another within casings of various sorts and have been generally of very limited area. They have also generally been associated with a tube or mouthpiece for directing the sound-waves thereagainst. In the present invention that upon which the sound-waves impinge or against which they are directed is entirely exposed and free to vibrate in response to the impinging waves whatever their form, source, or velocity. In so far as this part receives the sound-waves it resembles the diaphragm or membrane of the ordinary transmitter, but its construction, operation, and effectiveness being materially different from the ordinary diaphragm it has been deemed advisable to give to it the name of "target" or "sounding-board."

In the drawings, A indicates this sounding-board or target, which is connected to a movable part or member of the electrodes of the transmitter, and consists of some light elastic material, such as celluloid. Said movable part or member of the electrodes may be made in various forms and adapted to cooperate with the fixed or otherwise supported electrode or electrodes in various ways, four different forms therefor being indicated in the drawings at B B′ B^2 B^3.

In Fig. 2 the part B of the electrodes acts to span the portions C and C′ of the fixed electrode, these portions being insulated from one another, as indicated, and connected in the local circuit B, which, as usual, has communication with the line E through the inductorium F.

In Fig. 3 the part B′ is indicated as resting directly upon the flat end of the fixed electrode C^2, the part B′ serving in this instance as one of the electrodes and being connected to the circuit of the transmitter by means of the insulated conductor G, which in this form of the instrument is passed through the fixed electrode and engages at its lower end with a spring H, electrically connected to one of the binding-posts of the instrument, the electrode C^2 being connected to the other binding-post, as indicated. The conductor G also serves as a projection from B′ into C^2 for holding the former in place upon the latter.

In Fig. 4 the part B^3 is shown suspended by the conductor I from the lower end of the wall-bracket J. Resting upon this or secured to the bracket I and engaging with the electrode B^3 is the cooperating electrode C^3, from which the other terminal of the transmitter-circuit leads through the bracket J.

In Fig. 5 the electrode B^4 has its lower end made in speroidal form and is placed or supported as a projection from B^4 in a cup in the upper end of the fixed electrode C^4. The target A is secured to the electrode B^4 in any suitable manner and the circuit-terminals of the transmitter are connected in any suitable way to the electrodes B^2 and C^4.

The target or sounding-board is by preference made of some thin light material which is not detrimentally affected [fol. 233] in any way by moisture. Celluloid has been used for this purpose, but other similar light elastic substances will do as well. The target or sounding-board may be of any suitable shape and secured to the movable member of the electrodes in any suitable manner, but in practice a conical or skirt-like form, such as illustrated, has been found preferable. It is also preferable to attach this conical sounding-board by its apex to the movable electrode and to have it depend therefrom. It might, however, in the construction of apparatus shown in Fig. 3, be inverted, so

that the base of the cone would be uppermost. It is believed that the conical form is most efficient because of its not having any particular tone of its own, but being capable because of its graded diameters to respond to any and all tones.

If it is desired simply to obtain an extended area for the sounding-board regardless of its inherent tone, it may assume a cylindrical form, as indicated in Fig. 4.

If the sounding-board is made of considerable size, and it may be made of any desired size, the construction represented in Fig. 3 is perhaps the best, since therein a portion of the weight of the electrode B and the sounding-board may be sustained by the spring H. Any suitable tension device, such as indicated at K, may be added to this spring to vary the degree of pressure between the electrodes B' and C'.

The electrodes may also be made of any suitable material, but they are preferably made of carbon.

What I claim as my invention is—

1. In a telephone-transmitter, the combination with a suitable support, of a fixed electrode projecting therefrom, a movable electrode mounted upon the fixed electrode, and a sounding-board of light elastic material, such as celluloid, attached to and depending from the movable electrode in a conical or skirt-like form so as to produce an extended surface adapted to receive sound-waves from all sides and to convey the motion produced thereby to the movable electrode, as and for the purpose set forth.

2. In a telephone-transmitter, the combination with a fixed electrode, of a movable electrode mounted thereon and having a projection entering the fixed electrode to hold it in place on the latter, and an elastic conical or skirt-like sounding-board or target depending from the movable electrode for the purpose set forth.

3. In a telephone-transmitter, the combination with a fixed electrode of a movable electrode mounted thereon, a sounding-board or target attached to the latter, an insulated conductor extending from the movable electrode through the fixed electrode, and a spring forming one terminal of the circuit through the transmitter and serving as a partial support for said conductor, the movable electrode and the sounding-board or target.

No. 654,360. Patented July 24, 1900.

E. SCHOPF.

SOUNDING BOARD SUPPORT.

(Application filed Feb. 19, 1900.)

(No Model.)

FIG. I.

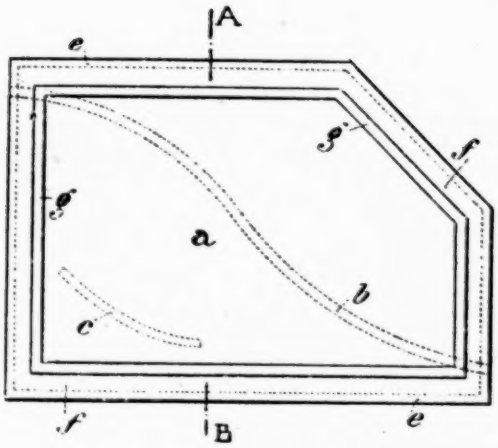

FIG. I.

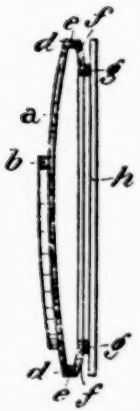

Witnesses:

Inventor:

Emil Schopf.

Signed at Washington, in the District of Columbia, this 1st day of March, A. D. 1897.

James Harris Rogers.

Witnesses: Joseph L. Rogers, James C. Rogers.

(Here follows drawing, side folio 234)

[fol. 235] United States Patent Office

Emil Schopf, of Berlin, Germany

Sounding-Board Support

Specification forming part of Letters Patent No. 654,360, dated July 24, 1900. Application filed February 12, 1900. Serial No. 4,934. (No model.)

To all whom it may concern:

Be it known that I, Emil Schopf, pianoforte manufacturer, a subject of the German Emperor, residing at Markusstrasse 18, Berlin, Germany, have invented certain new and useful Improvements in Sounding-Board Supports, of which the following is a specification.

Sounding-boards for musical instruments as generally used rest around their rim on a frame wherewith they are firmly connected. By this firm connection of the sounding-board with a stationary frame the sounding-board around about the edges up to a pretty considerable distance cannot vibrate and only the middle part of the sounding-board is able to make vibrations of an amplitude necessary to obtain a perfect sound. This disadvantage is especially perceptible in the shorter treble-strings of an upright piano or horizontal piano, which lie near to that part of the sounding-board which is close to the supporting-frame. The sound of these strings is not reinforced by the vibrations of the sounding-board in comparison with that of the middle strings, so that the difference between the beauty of the sound of the upper octave of a piano and the middle octaves is thus explicable. In order to do away with these disadvantages, the absolutely stationary fixing of the rim of the sounding-board is avoided in the present construction, so that the whole sounding-board can freely vibrate.

Figure 1 of the annexed drawings is an under plan view of the sounding-board shown separate from its seat, the seat being omitted in order to make the drawing clearer. Fig. II is a section of the line A B, Fig. 1, showing also the seat.

The real sounding-board a, which can be made of usual sounding-board wood, receives its tension by the two bridges b and c.

To enable the sounding-board to vibrate to the border, the outermost border d of the sounding-board is provided with an edging-fillet e, extending around its circumference and firmly connected on the one side with the sounding-board and on the other side with a wooden plank f, also extending around the circumference of the sounding-board. This wooden plank f is again provided along the edge opposite that by which it is attached to the sounding-board proper with a resting-fillet g, fastened on the support h, by which it is fastened in the instrument. The wooden plank f is made of hard wood, while for the sounding-board proper soft wood is used, as is well-known. The reason is the same as in violins—that is, to enable the sound-waves to rebound on this part f, so that only the real sounding-board a comes into vibratory effect. In this manner the sounding-board is able to swing like a spring or similar cross-section—that is, the sounding-board is able to swing also at its edges because direct fastening of the edges is avoided by the use of the intermediate support, consisting of the plank f.

I declare that what I claim is—

The combination with a sounding-board a of a fillet e having one of its faces glued to the under face of the sounding-board at its edge, a hard-wood plank frame f having the same shape exteriorly as the sounding-board glued at the outer edge of one of its faces to the under face of said fillet e and a fillet g glued to the under face of said plank frame f at the inner edge thereof.

In witness whereof I have signed this specification in the presence of two witnesses.

Emil Schopf.

Witnesses: Woldemar Haupt, Henry Hasper.

(Here follow drawings, side folios 236, 237, 238, and 239)

No. 674,575. Patented May 21, 1901.

A. L. DUWELIUS.

PHONOGRAPH.

(Application filed June 20, 1900.)

(No Model.) 4 Sheets—Sheet 1.

Fig. 1.

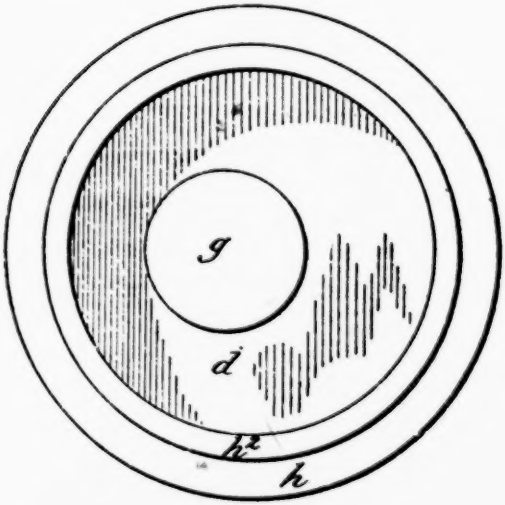

Fig. 2.

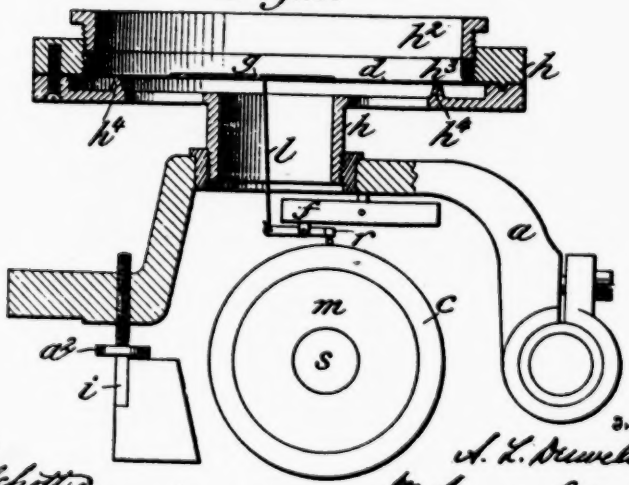

Witnesses

F. H. Schott

J. E. Hutchinson Jr.

Inventor

A. L. Duwelius,

by Munn & Goldsborough

Attorneys.

No. 674,575. Patented May 21, 1901.

A. L. DUWELIUS.

PHONOGRAPH.

(No Model.) (Application filed June 20, 1898.) 4 Sheets—Sheet 2.

Fig. 5.

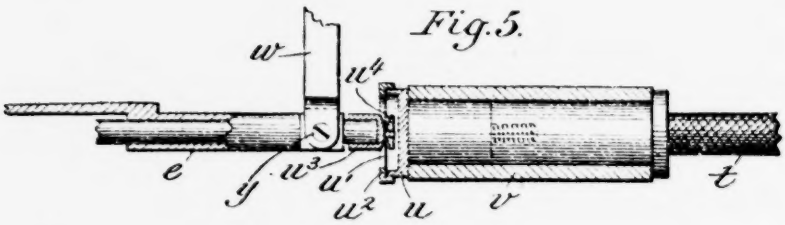

Fig. 3.

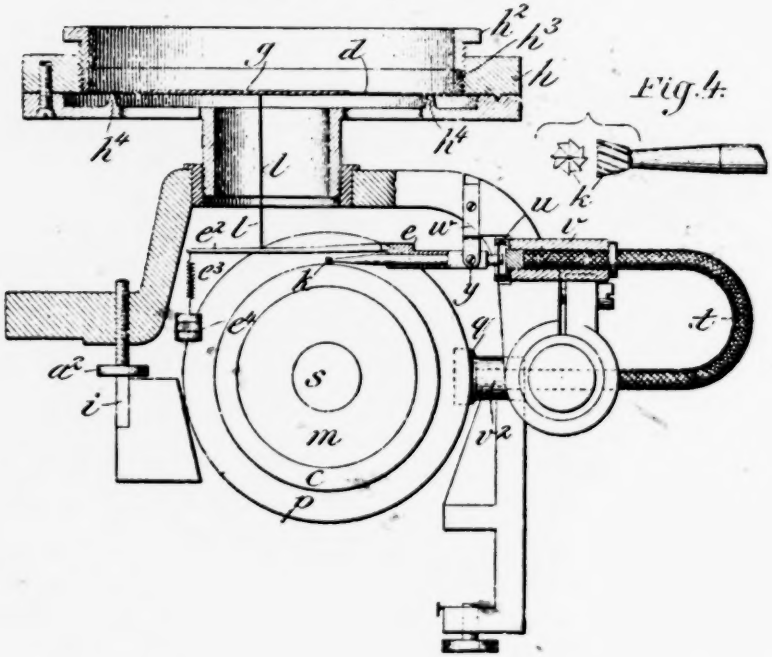

Fig. 4.

Witnesses:
D. W. Edelin.
J. E. Hutchinson Jr.

Inventor:
A. L. Duwelius,
by Connie & Goldsmith,
Attys.

No. 674,575. Patented May 21, 1901.

A. L. DUWELIUS.

PHONOGRAPH.

(Application filed June 20, 1896.)

(No Model.) 4 Sheets—Sheet 3.

Fig. 7.

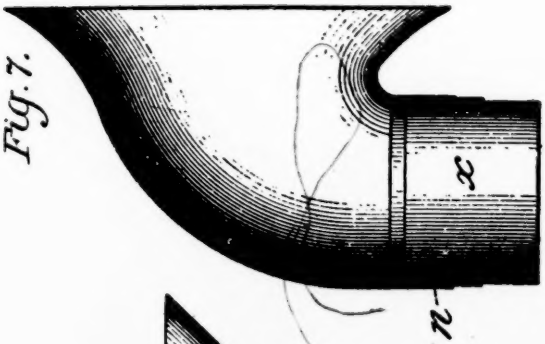

Fig. 6.

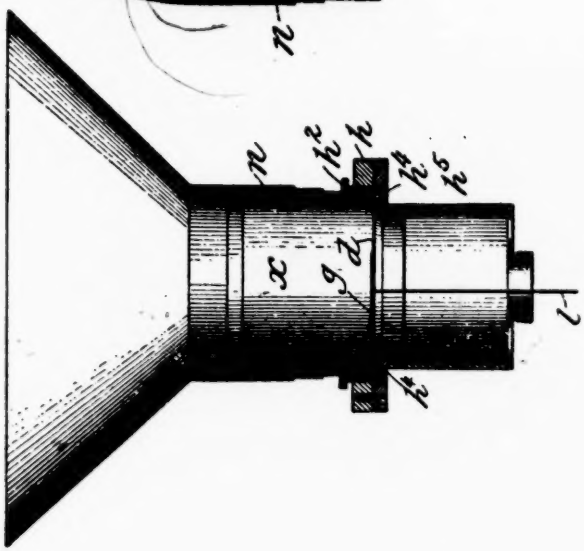

Witnesses:
D. W. Edelin.
J. E. Hutchinson Jr.

Inventor:
A. L. Duwelius,
by Lemmie & Goldsborough,
Attys

No. 674,575. Patented May 21, 1901.

A. L. DUWELIUS.

PHONOGRAPH.

(No Model.) (Application filed June 20, 1900.) 4 Sheets—Sheet 4.

Fig. 8.

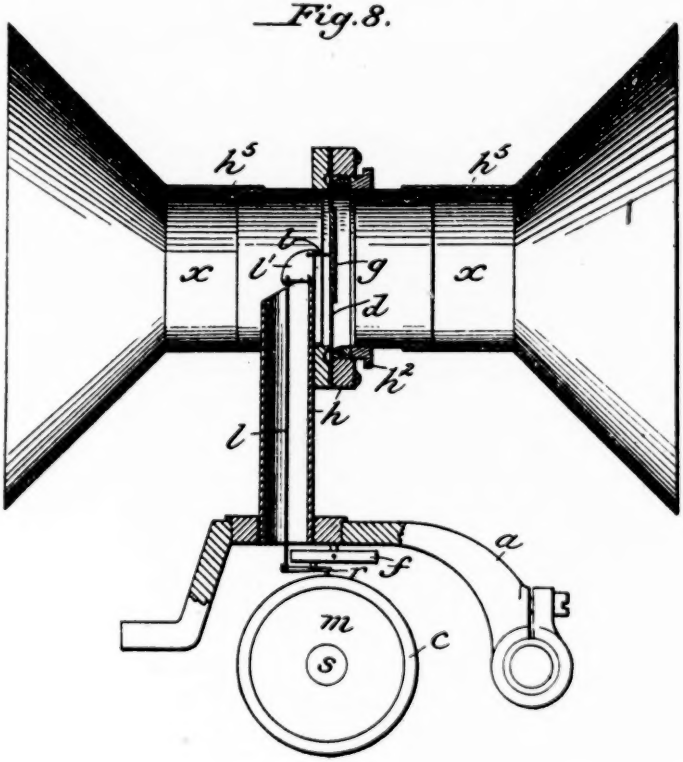

Witnesses
H. H. Schott
J. L. Hutchinson Jr.

Inventor
A. L. Duwelius,
by Lemuel W. Serrell
Attorney.

[fol. 240] United States Patent Office

Augustus L. Duwelius, of Cincinnati, Ohio, Assignor to Alfred H. Duwelius and Walter S. Duwelius, of Same Place

Phonograph

Specification forming part of Letters Patent No. 674,575, dated May 21, 1901. Application filed June 20, 1898. Serial No. 683,979. (No model.)

To all whom it may concern:

Be it known that I, Augustus L. Duwelius, a citizen of the United States, residing at Cincinnati, county of Hamilton, State of Ohio, have invented certain new and useful Improvements in the Art of Reproducing Sound; and I do hereby declare the following to be a full, clear, and exact description of the invention, such as will enable others skilled in the art to which it appertains to make and use the same.

My invention relates to certain new and useful improvements in the art of reproducing sound; and it has for its object to provide means for obtaining a more nearly perfect reproduction of sound than has been heretofore attainable. I use the term "reproduction" in its general sense as including the entire operation of reproduction from the initial step of receiving and recording the sound to the final step of receiving and rendering it again audible.

It is well known that the loudness of sound produced by a vibrating diaphragm is dependent upon the amplitude of vibration of the diaphragm. Heretofore in the construction of sound-reproducing devices the practice has been in accordance with this law of physics to increase or diminish the amplitude of vibration of the receiving-diaphragm according as it was desired to increase or diminish the volume of the reproduced sound. I have discovered, however, that in dealing with complex sounds of varying volume, quality of tone or timbre, and distinctness of articulation—such, for instance, as the articulations of the human voice—better results are obtained by providing a diaphragm having a total mean effective area of not less than three and a half square inches. It has also been the general practice in the

construction of the speaking-trumpets employed as sound-ducts between the diaphragm and the atmosphere to give them substantially the form of a cone terminating at its smaller end in a neck provided with a throat much smaller in area than the area of the diaphragm. I have found that much better results are obtained by providing a throat having an area of not less than nine-sixteenths of the area of the vibrating portion of the diaphragm, and also that when the throat is so constructed as to admit of a variation of its length pleasing effects may be produced, sometimes to the extent of materially improving the reproduction of badly-recorded sound. I have further discovered that by providing a tubular extension to the reverse side of the diaphragm-holder the sonorousness of the apparatus may be still further increased. This circumstance I attribute to the fact that the tubular extension contains a relatively deep column of air, confined at the sides but, establishing practically unobstructed communication between the diaphragm and the external air at the end of the tubular extension, that it acts as a resonator varying the sharpness or hollowness of the tone, and that it serves, in combination with the tubular extension or throat on the obverse side of the diaphragm, to establish sonorous zones or sound-waves remote from the apparatus by causing positive vibrations synchronous with the reciprocating movements of both sides of the diaphragm, and producing thereby positive alternate compressions and rarefactions of the atmosphere in contact with the tympanum of the ear. I have further discovered that by placing the diaphragm in a vertical position a more perfect reproduction of sound is obtained.

Another feature of my invention relates particularly to the recording step in the general operation of sound reproduction. Heretofore it has been customary to record the sound-vibrations upon a revolving cylinder or disk of wax or like material having a soft surface, through the agency of a gouge actuated by the diaphragm to produce i-dentations of varying depth corresponding to the diaphragm vibrations. Owing to the nature of the material employed in their construction, these record cylinders or disks are quite fragile, and the engraved records upon their surfaces are easily ruined by careless handling and have a comparatively short-lived usefulness under the best conditions. The softness of the material soon permits the sharpness of

the indentations to become blunted, in consequence of which much detail is lost in the reproduction of the sound. I have devised a method through the agency of which rec- [fol. 241] ords of sound-waves may be engraved upon the surface of harder materials, such as metals, and their durability and consequent clearness greatly enhanced. This feature of my invention consists, generally speaking, in the employment of a revolving cutter or abrader guided and controlled by the vibrating diaphragm, so that the diaphragm instead of supplying the power necessary to engrave merely regulates the depth of the cut.

My invention is applicable generally to sound-reproducing devices, and particularly to the phonograph, graphophone, gramophone, and the like, as will be readily understood.

In the accompanying drawings, Figure 1 represents a plan view of my improved diaphragm and holder. Fig. 2 represents a sectional view of the diaphragm and holder and their adjuncts partly in elevation. Fig. 3 represents an end view, partly in section, of a phonograph equipped with my improved diaphragm and holder and record-engraving device. Fig. 4 represents, on a larger scale, one form of my revolving cutter-tool. Fig. 5 represents, in section and on a larger scale, the preferred means for connecting the shank of the revolving cutter with the flexible driving-shaft. Fig. 6 represents a central sectional view of my improved diaphragm and holder, the tubular extension, and the adjustable sound-duct. Fig. 7 represents a modified form of the sound-duct. Fig. 8 represents a form of my apparatus in which the diaphragm d and its holder h are employed in a vertical position, the connection with the links l being made through a bell-crank or angle lever l', fulcrumed on the holder h. In the form shown sound-ducts with tubular throats x x are applied to both sides of the diaphragm-holder.

Similar letters of reference indicate similar parts throughout the several views.

Referring to the drawings, and particularly to Figs. 1 and 2 thereof, s indicates the rotatory shaft of the phonograph, driven from any suitable source of power and provided with the customary mandrel m. c indicates the record-cylinder; r, the reproducing-stylus and fulcrumed car-

rier; f, the floating fulcrum and weight; a, the speaker-arm support; a^2, the adjusting-screws, and I the rail upon which the adjusting screws are adapted to ride. All of these parts being well known in the art, their construction and mode of operation will be readily understood.

Attached to the speaker arm or support a is shown my diaphragm-holder h, clamping the rim of the diaphragm d, the tension of which is regulated by the screw h^2 and washer h^3, together with the circular bridge h^4. On the face of the diaphragm d, but eccentric thereto, is shown the relatively non-flexible area g, connected with the stylus-carrier r by the link l. This non-flexible area may be produced by adding a stiff disk to either side of the diaphragm, as shown, or may be produced by corrugating or embossing the diaphragm itself or by scoring it, or in many other ways and forms. The ratio of the non-flexible to the flexible area of the diaphragm will depend upon the nature of the materials employed, but should be as great as permissible in order to produce vibration over the largest area possible.

By locating the non-flexible area in a position eccentric to the main portion of the diaphragm the practical effect is to impart a different kind of movement thereto and to produce better results. Thus when so located the resistance to its movement becomes unequal and that portion of its periphery and surface nearest the edge or rim of the diaphragm offers the greatest resistance to motion and becomes relatively to a greater or less extent (depending upon the degree of eccentricity) a fulcrum. In other words, the non-flexible area becomes in effect a musical reed.

As shown in Fig. 6, the diaphragm-holder is preferably provided at the reverse side of the diaphragm with a tubular extension h^5, serving as a resonator and containing a comparatively deep column of air in communication with the external atmosphere and confined at its sides. The sound-duct is provided with a throat x, preferably of approximately the same size as the diaphragm, but which should in any event not be less in area than nine-sixteenths of the vibrating portion of the diaphragm. In order to vary the effect, the neck n of the sound-duct is made adjustable in length, preferably by constructing it of a number of sections telescoping within one another. I have found by experiment that for most sounds a length of tube or

throat approximately equal to its diameter is most desirable. In the form shown in Fig. 6 the sound-duct is adapted to project the sound vertically, while in the form shown in Fig. 7 it is intended to project the sound horizontally.

The means for obtaining the permanent record constituting a feature of my invention are illustrated in Fig. 3, one of the forms of cutting-tool or abrader being shown in Figs. 4 and 5. The cutting-tool k, which is designed to revolve rapidly, is journaled in a carrier e and is driven by a shaft s through the instrumentality of the friction-gears p q, the flexible shaft t, and the coupling u. The ends of the flexible shaft t are journaled in bearings v v^2. The form of flexible coupling u shown consists of a flexible diaphragm u', having its rim clamped in a recessed case u^2, which is joined to and driven by the flexible shaft t. Attached to the center of this diaphragm by means of the nut u^4 is the tool-socket u^3, through which the necessary engagement with the shank of the cutting-tool is made. The cutting-tool carrier e is trunnioned and is carried in the forked support w through the agency of the pointed screws [fol. 242] y, which permit it to move freely in a vertical direction, but prevent all horizontal movement. The tool-carrier e is provided with the extended arm e^2, which through the link l makes connection with the diaphragm by which the vertical movement of the cutting-tool is controlled.

At the extreme end of the arm e^2 is shown connected therewith a spiral spring e^3, carrying a suspended weight e^4. The purpose of this combination of weight and spring is to furnish the necessary pressure to the cutting-tool responsively to the variations of the diaphragm d and to avoid "chattering." The maximum depth of cutting may be regulated by the screws a^2. The angle of cutting may be altered, as required, by slightly withdrawing the bearing v and lowering the tool by means of the screw a^2. The operation of the device is such that the rotation of the cylinder e against the rapidly-revolving cutter k causes the surface of the cylinder to be scored to such depths as the variations of the diaphragm d, actuated by the impinging sound-waves, may permit.

Having thus described my said invention, what I claim is—

1. In a sound-reproducing apparatus, a vibratory diaphragm having a substantially non-flexible area eccentric thereto.

2. In a sound-reproducing apparatus, the combination with a vibratory diaphragm having a non-flexible area eccentric thereto, of a sound-duct having an adjustable throat leading to said diaphragm.

3. In a sound-recording apparatus, the combination with a record-surface, a cutting or abrading tool rotatable on an axis substantially parallel to the direction of movement of said surface at the point of engagement with said tool, of means for rotating the same, and a diaphragm for vibrating and governing the depth of cut of the tool in accordance with the diaphragm vibrations.

4. In a sound-reproducing apparatus, the combination with a cutting or abrading tool, of means for rotating it, a vibratory diaphragm having a portion of inferior flexibility connected to said cutting or abrading tool to govern the depth of cut thereof.

5. In a sound-reproducing apparatus, the combination of a vibratory diaphragm having an area of inferior flexibility eccentric to the diaphragm as a whole, and an air-column chamber on the reverse side of said diaphragm.

In testimony whereof I affix my signature in presence of two witnesses.

Augustus L. Duwelius.

Witnesses: Leonard W. Goss, Arch. Mirrielees.

(Here follow drawings, side folios 243 and 244)

[fol. 245] United States Patent Office

Frank F. Shanks, of Chicago, Illinois

Phonograph, Gramophone, and Other Similar Sound-reproducing Machines

Specification of Letters Patent

No. 822,024. Patented May 29, 1906

Application Filed February 20, 1905. Serial No. 246,612

To all whom it may concern:

Be it known that I, Frank F. Shanks, a citizen of the United States, and a resident of Chicago, in the county of

No. 822,024. PATENTED MAY 29, 1906.

F. F. SHANKS.

PHONOGRAPH, GRAMOPHONE, AND OTHER SIMILAR SOUND REPRODUCING MACHINES.

APPLICATION FILED FEB. 20, 1905. 2 SHEETS—SHEET 1

Fig. 1.

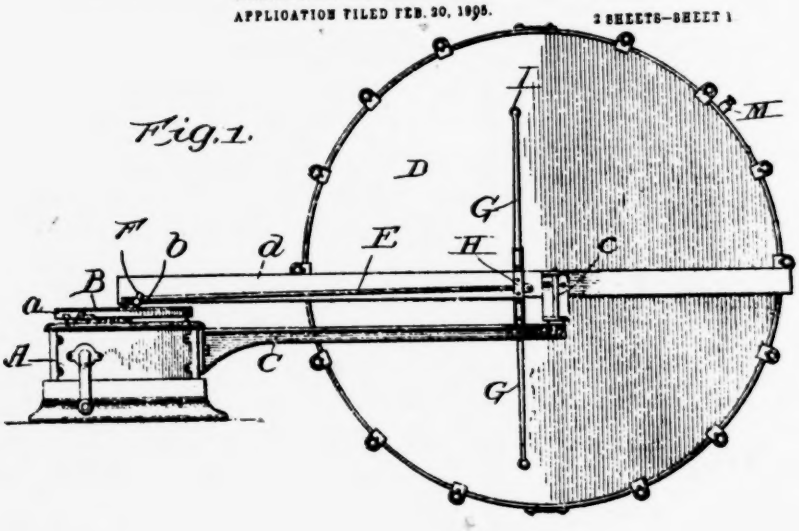

Fig. 2.

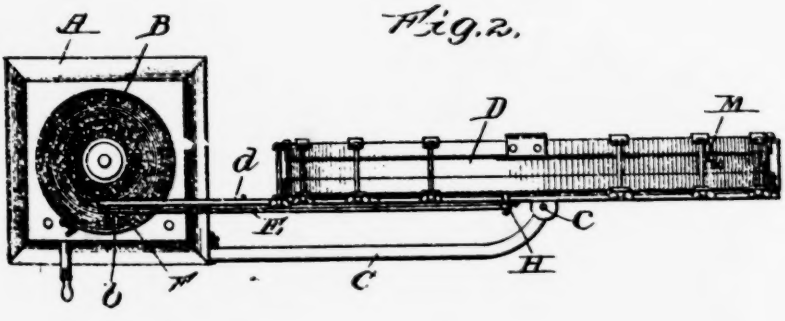

Witnesses:
C. M. Hemrich
C. K. Lundy

Inventor:
Frank F. Shanks
by Frank D. Thomason
Atty.

No. 822,024 PATENTED MAY 29, 1906.

F. F. SHANKS.

PHONOGRAPH, GRAMOPHONE, AND OTHER SIMILAR SOUND REPRODUCING MACHINES.

APPLICATION FILED FEB. 20, 1905.

2 SHEETS—SHEET 2

Fig. 3.

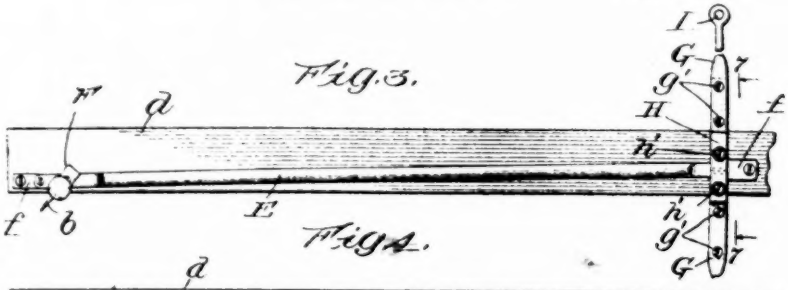

Fig. 4.

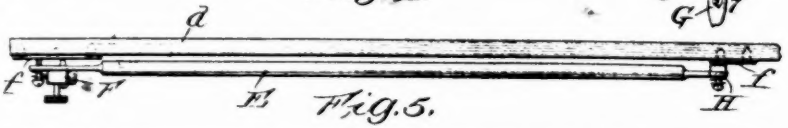

Fig. 5.

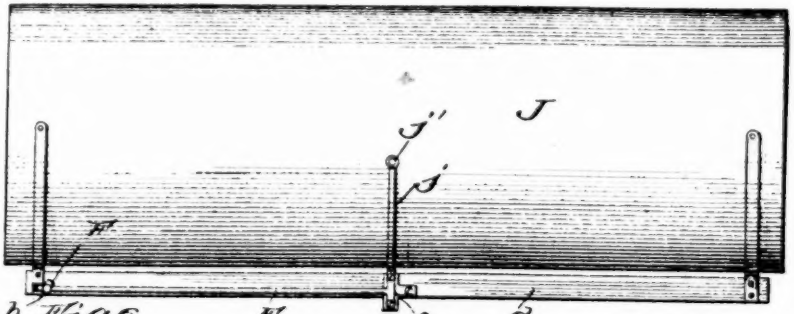

Fig. 6.

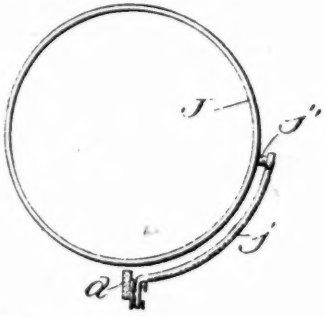

Fig. 7.

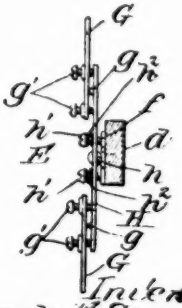

Witnesses:
Chas. Hemick
E. K. Lundy

Inventor:
Frank F. Shanks
By Frank D. Thompson
Atty.

Cook and State of Illinois, have invented certain new and useful Improvements in Phonographs, Gramophones, and other Similar Sound-Reproducing Machines, of which the following is a full, clear, and exact description.

My invention relates to machines for reproducing sounds from records in what are commonly known as "phonographs," "gramophones," &c.; and its particular object is to provide means whereby sound-waves energized by the instrument are transmitted therefrom and audibly delivered at a distance from the needle or tracker engaging the record to the hearer in clear ringing tones.

Heretofore it has generally been found very difficult and well-nigh impossible to reproduce sounds from the machine in the precise manner and tone in which they were originally received by the record. This was often caused by the vibrations of the sound-waves passing through the metal horn or megaphone, and therefore the sound reproduced was "metallic" in tone and high notes or swells became harsh and rasping. These objectionable features have all been overcome by my improved means for the transmission to a point beyond the range of the immediate vibratory field of the needle or tracker and the audible delivery of the transmitted sound-waves after they have been projected upon a reproducing device. I accomplish this by the mechanism hereinafter fully described in the specification and illustrated in the drawings and as more fully pointed out in the claims.

In the drawings, Figure 1 is a side elevation of one form of my improved device, showing the same in connection with a snare-drum and operating with a phonograph of the disk type. Fig. 2 is a top plan view of the same. Fig. 3 is a front elevation in detail of the sound-wave-transmission portion of my improvement. Fig. 4 is a top plan view of the same. Figs. 5 and 6 are front elevation and end views of a modified form of resonator used in connection with my improvement. Fig. 7 is a transverse vertical section taken on line 7 7, Fig. 3, looking in the direction indicated by the arrows and showing the manner of connecting and adjusting the vibrating arms.

For the purpose of a clear understanding of my invention I have illustrated the same operating in connection with a phonograph of the disk type; but it will be obvious to

those skilled in the art to which this invention appertains that the same is applicable to any of the sound-reproducing or talking machines now in general use.

By referring to the drawings it will be seen that A represents the box or casing in which is housed the proper mechanism for revolving the flat circular platform a or the table thereof, which latter carries the usual record-disk B, from which the sound-waves are reproduced through the medium of a steel reproducer needle-point b. Extending horizontally from one side of the casing A is an elongated L-shaped supporting-arm C, that has arising from its outer extremity a suitable pivot stud or pin c, the upper portion of which latter is reduced slightly in diameter to provide a shoulder, as will be seen in Fig. 1 of the drawings. Upon the end of this arm C are supported my improved sound magnifying or intonating means, which, as well be hereinafter more fully described, may consist of a drum-shaped disk or resonator, a hollow elongated cylinder, a banjo, violin, or other stringed musical instrument from which the sound-waves are vibrated or deflected in a greater or increased volume than received. For the sake of convenience I will describe the same in connection with the drum-shaped resonator D illustrated in Figs. 1 and 2 of the drawings. The resonator D is preferably constructed similar to an ordinary snare-drum, except that in place of the usual sheepskin or parchment covering it is provided with a covering of cloth coated with a fibrous composition or paper and its dimensions are approximately twenty-four inches in diameter by one and one-half inches in thickness. These dimensions are not essential, however, and while I prefer to use the covering above described the usual sheepskin covering may be employed without departing from the principle of my invention. Bridging across the face of the resonator D, but not in contact with the surface thereof, is a straight shaft d, that projects beyond the edge of the resonator nearest the phonograph until its end is over the center of the record-disk. This shaft is used as a support for the resonator D, as well as to carry the means for holding the sound-vibrat- [fol. 246] ing devices and vibrators now to be described. These sound-vibrating devices comprise an elongated rock-bar E, extending from near the outer end of the shaft d to about the center of the resonator D, and the same is sup-

ported away from said shaft d by fulcrum-pivots x and is adjustable toward and away from said shaft by set-screws at either end of the same engaging with a screw-plate f, mounted upon the contiguous portion of the shaft. On the outer end of this rock-bar E is mounted at a tangent angle thereto the needle-carrying block F, which is preferably secured thereto by means of a suitable adjusting-screw. The needle-point b is adjustably held in said block F by means of a small thumb-screw in order to readily remove and replace the same whenever so desired. This bar E is rocked by the engagement of the needle-stylus b with the record-disk, and said rocking motion of the bar imparts a vibratory movement to arm G, hereinafter referred to. At the end of the rock-bar E opposite said needle is fastened a suitable transverse plate H, that is provided mediate its extremities with a fulcrum-pivot h, and in order to adjust either end of said plate suitable adjusting screws h′ are provided, one on each side of said pivot, while between the heads of said screws and said plate are interposed suitable coil-springs h^2. Near each end of said plate H are suitable fulcrum-pivots g, that form ribs extending across the width of the plate, and upon which is fulcrumed the contiguous flattened end of said vibrator-arm G. These vibrator-arms G are adjustable toward and away from the surface of the resonator by suitable set-screws g′. Upon the ends of each of these vibrator-arms G are mounted suitable hammers I, the surfaces of which are preferably formed of or covered with rubber or other suitable material. These hammers are adapted to be rapidly vibrated against the face of the diaphragm or resonator D and to impart thereto the bodily-vibratory movements transmitted to said hammers through the rock-bar E, said vibrations being in direct accord with the sound undulations on the record-disk.

When the machine is in operation, the sound-waves are imparted by the revolving disk B to the needle-point, and the vibrations thus created are conveyed along rod E and transmitted therefrom to the vibrating arms G. These arms G are caused to rapidly vibrate and the hammers I on their ends throw off the vibrations against the adjacent face of the resonator F, which latter reproduces the sound-waves and intensifies the same in clear full tones.

While it is not absolutely essential, I may construct the drum-shaped resonator airtight and provide an outward pressure-valve M in the edge thereof. By forcing air between the heads of the drum or resonator the tension of the face thereof may be adjusted to a nicety and a purer tone obtained thereby.

In the modification shown in Figs. 5 and 6 in place of the drum-shaped resonator described heretofore I employ a hollow elongated cylinder J, made of any suitable resounding material that is preferably stretched over a suitable framework and formed air-tight. In this modification the supporting shaft d and rock-bar E, as well as the reproducing-needle b and the means for adjusting said bar E, are all similar in construction to the corresponding elements described in connection with resonator D. The vibrating arm, however, is of a segmental character, and its curvature corresponds with the curvature of the outer circumference of said cylinder and extends around the same about one-quarter of the circumference thereof. A hammer j′ is also provided, which, if desired, may be similar to the hammer I.

When different kinds of musical selections are to be reproduced by the phonograph, I have found it very advisable to employ different kinds and sizes of resonators. When the record contains a violin solo, it has been found that by substituting a violin in place of the "drum," hereinbefore described, and permitting the vibrating arm, which may be covered with rubber, to pass over all the strings thereof, that the sound-waves and tone of reproduction are decidedly more natural and the music is not harsh or rough, as is now the case with phonographs employing a horn or megaphone. By substituting the proper instrument for one similar to the instrument used in making the record much better results have been attained. It has been found also that an orchestral or band selection is better reproduced by mounting an entirely metallic cylinder similar to that shown in Figs. 5 and 6 upon the supporting shaft, and when it is desired to reproduce the human voice it has been found that the drum hereinbefore described is the most satisfactory.

What I claim as new is—

1. In combination, a phonographic record; devices engaging the sound-interlineations thereon; a solid bar for transmitting the vibrations resulting from said engage-

ment to a point beyond the range of the cynchronous sympathetic vibrations of said devices; and disconnected means for audibly reproducing said vibrations at the opposite end of said bar.

2. In combination, a phonographic record; devices engaging the sound-interlineations thereon; a solid bar directly engaging said devices which transmit the vibrations resulting from said engagement to a point beyond the range of the synchronous sympathetic vibrations of said devices; and disconnected means for audibly reproducing said vibrations at the opposite end of said bar.

[fol. 247] 3. In combination, a phonographic record; a needle engaging the sound-interlineations thereon; a rod for transmitting the vibrations resulting from said engagement to a point beyond the range of the synchronous sympathetic vibrations of said needle; a vibratory arm carrier by said rod; and means for reproducing said vibrations at the end of said rod nearest said vibratory arm.

4. In combination, a phonographic record; a needle engaging the sound-interlineations thereon; a fulcrumed rod for transmitting the vibrations resulting from said engagement to a point beyond the range of the synchronous sympathetic vibrations of said needle; a vibratory arm carried by said rod; and means for reproducing said vibrations at the end of said rod nearest said vibratory arm.

5. In combination, a phonographic record; a needle engaging the sound-interlineations thereon; a yieldingly-fulcrumed rod for transmitting the vibrations resulting from said engagement to a point beyond the range of the synchronous sympathetic vibrations of said needle; a vibratory arm carried by said rod; and means for reproducing said vibrations at the end of said rod nearest said vibratory arm.

6. In combination, a phonographic record; a needle engaging the sound-interlineations thereon; a rod for transmitting the vibrations resulting from said engagement to a point beyond the range of the synchronous sympathetic vibrations of said needle; an adjustable vibratory arm carried by said rod; and means for reproducing said vibrations at the end of said rod nearest said vibratory arm.

7. In combination, a phonographic record; a needle engaging the sound-interlineations thereon; a rod for transmitting the vibrations resulting from said engagement to a point beyond the range of the synchronous sympathetic

vibrations of said needle; an adjustable fulcrumed arm carried by said rod; and means for reproducing said vibrations at the end of said rod nearest said vibratory arm.

8. In combination, a phonographic record; a needle engaging the sound-interlineations thereon, a yieldingly-fulcrumed rod for transmitting the vibrations resulting from said engagement to a point beyond the range of the synchronous sympathetic vibrations of said needle; an adjustable fulcrumed vibratory arm carried by said rod; and means for reproducing said vibrations at the end of said rod nearest said vibratory arm.

9. In combination, a phonographic record; a needle engaging the sound-interlineations thereon; a rod for transmitting the vibrations resulting from said engagement to a point beyond the range of the synchronous sympathetic vibrations of said needle; vibratory arms each fulcrumed mediate their length and carried by said rod; and means for reproducing said vibrations at the end of said rod nearest said vibratory arm.

10. In combination, a phonographic record; a needle engaging the sound-interlineation thereon; a fulcrumed rod for transmitting the vibrations resulting from said engagement to a point beyond the range of the synchronous sympathetic vibrations of said needle; vibratory arms each fulcrumed mediate their length and carried by said rod; and means for reproducing said vibrations at the end of said rod nearest said vibratory arm.

11. In combination, a phonographic record; a needle engaging the sound-interlineations thereon; a yieldingly-fulcrumed rod for transmitting the vibrations resulting from said engagement to a point beyond the range of the synchroneous sympathetic vibrations of said needle; vibratory arms each fulcrumed mediate their length and carried by said rod; and means for reproducing said vibrations at the end of said rod nearest said vibratory arm.

12. In combination, a phonographic record; a needle engaging the sound-interlineations thereon; a rod for transmitting the vibrations resulting from said engagement to a point beyond the range of the synchronous sympathetic vibrations of said needle; adjustable vibratory arms each fulcrumed mediate their length and carried by said rod; and means for reproducing said vibrations at the end of said rod nearest said vibratory arm.

13. In combination, a phonographic record; a needle engaging the sound-interlineations thereon; a rod for transmitting the vibrations resulting from said engagement to a point beyond the range of the synchronous sympathetic vibrations of said needle; adjustable fulcrumed vibratory arms each pivoted mediate their length and carried by said rod; and means for reproducing said vibrations at the end of said rod nearest said vibratory arm.

14. In combination, a phonographic record; a needle engaging the sound-interlineations thereon; a yieldingly-fulcrumed rod for transmitting the vibrations resulting from said engagement to a point beyond the range of the synchronous sympathetic vibrations of said needle; adjustable fulcrumed vibratory arms each pivoted mediate their length and carried by said rod; and means for reproducing said vibrations at the end of said rod nearest said vibratory arm.

15. In combination, a phonographic record; a needle engaging the sound-interlineations thereon; a rod for transmitting the vibrations resulting from said engagement to a point beyond the range of the synchronous sympathetic vibrations of said needle; vibratory arms carried by said rod that are fulcrumed mediate their length and adjustable independent of each other; and means for reproducing said vibrations at the end of said rod nearest said vibratory arm.

[fol. 248] 16. In combination, a phonographic record; a needle engaging the sound-interlineations thereon; a fulcrumed rod for transmitting the vibrations resulting from said engagement to a point beyond the range of the synchronous sympathetic vibrations of said needle; vibratory arms carried by said rod that are fulcrumed mediate their length and adjustable independent of each other; and means for reproducing said vibrations at the end of said rod nearest said vibratory arm.

17. In combination, a phonographic record; a needle engaging the sound-interlineations thereon; a yieldingly-fulcrumed rod for transmitting the vibrations resulting from said engagement to a point beyond the range of the synchronous sympathetic vibrations of said needle; vibratory arms carried by said rod that are fulcrumed mediate their length and adjustable independent of each other; and means for reproducing said vibrations at the end of said rod nearest said vibratory arm.

18. In combination, a phonographic record; a needle engaging the sound-interlineations thereon; a rod for transmitting the vibrations resulting from said engagement to a point beyond the range of the synchronous sympathetic vibrations of said needle; adjustable vibratory arms carried by said rod that are fulerumed mediate their length and adjustable independent of each other, and means for reproducing said vibrations at the end of said rod nearest said vibratory arm.

19. In combination, a phonographic record; a needle engaging the sound-interlineations thereon; a road for transmitting the vibrations resulting from said engagement to a point beyond the range of the synchronous sympathetic vibrations of said needle; adjustable fulerumed vibratory arms carried by said rod that are pivoted mediate their length independent of each other; and means for reproducing said vibrations at the end of said rod nearest said vibratory arm.

20. In a phonograph, the combination with a record having superficial sound-interlineations thereon, and mechanism for revolving the same; of devices engaging said sound-interlineations, consisting of a horizontal rod extending from within the circumference of said record to a point beyond the same; a needle carried on the inner end thereof and adapted to engage said interlineations; a vibratory arm mounted on the opposite end of said rod; and disconnected means for audibly reproducing the vibrations caused by the engagement between said needle and said interlineations.

In testimony whereof I have hereunto set my hand this 10th day of February, A. D. 1905.

Frank F. Shanks.

Witnesses: Frank D. Thomason, E. K. Lundy.

(Here follow drawings, side folios 249 and 250)

No. 857,209. PATENTED JUNE 18, 1907.

W. C. SMITH.

SOUND PRODUCING DEVICE.

APPLICATION FILED OCT. 6, 1906.

2 SHEETS—SHEET 1.

Fig 1

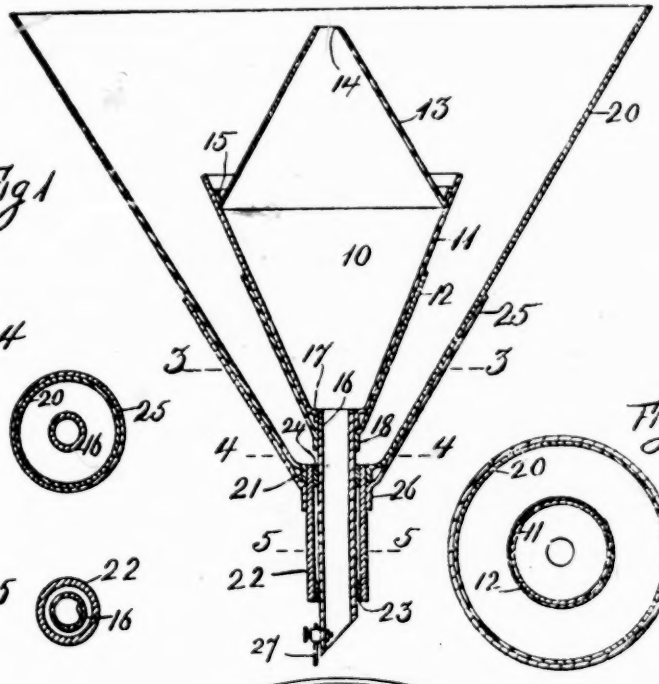

Fig 4

Fig 3

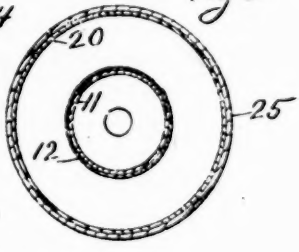

Fig 5

Fig 2

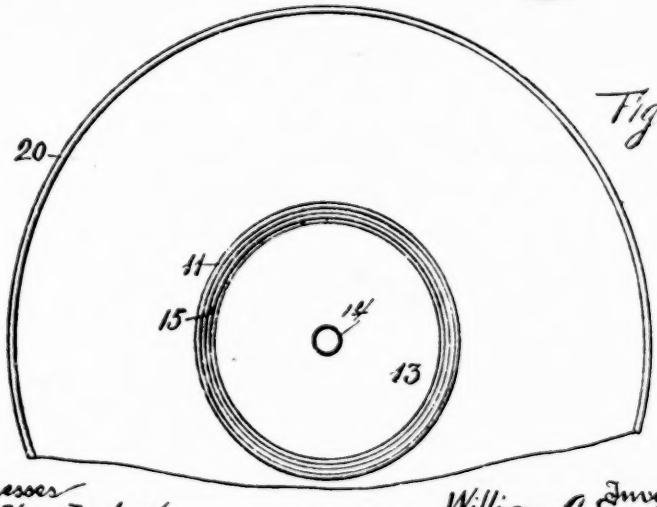

Witnesses
S. G. Van Derbeck
M. M. Cook

Inventor
William C. Smith
By his Attorney
Alfred Bonneville

No. 857,209. PATENTED JUNE 18, 1907.

W. C. SMITH.

SOUND PRODUCING DEVICE.

APPLICATION FILED OCT. 5, 1906.

2 SHEETS—SHEET 2.

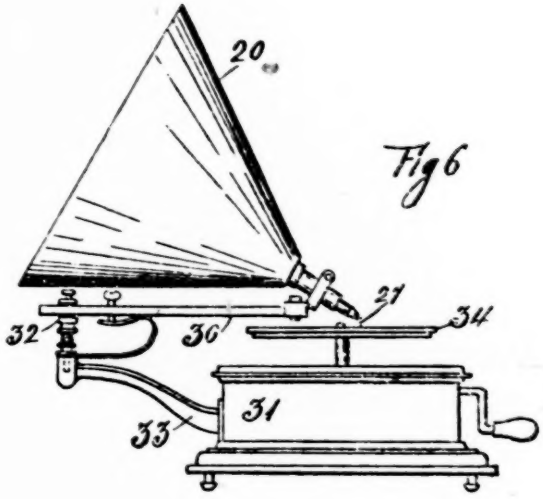

Fig 6

Witnesses
S. G. Van Derbeck.
W. H. Cook

Inventor
William C. Smith
By his Attorney
Art de Bonneville

[fol. 251] United States Patent Office

William C. Smith, of Paterson, New Jersey

Sound-producing Device

Specification of Letters Patent

No. 857,209. Patented June 18, 1907

Application Filed October 5, 1906. Serial No. 337,620

To all whom it may concern:

Be it known that I, William C. Smith, a citizen of the United States, and a resident of Paterson, in the county of Passaic and State of New Jersey, have invented certain new and useful improvements in Sound-Producing Devices, of which the following is a specification:

This invention relates to a sound producing device which is specially applicable to talking machines and the like. Its organization comprises means for producing sound without the metallic effects of ordinary horns and vibrating diaphragms, securing also full loud tones, which are generally not obtained with apparatus that produces soft and modulated notes.

In the drawings Figure 1 represents a vertical axial section of the invention, Fig. 2 is a partial top plan view of Fig. 1, Fig. 3 is a section of Fig. 1 on the line 3, 3, Fig. 4 shows a section of Fig. 1 on the line 4, 4, Fig. 5 represents a section of Fig. 1 on the line 5, 5 and Fig. 6 shows a talking machine with my invention connected therewith.

The invention is shown to comprise an inner horn 10, which consists of the conical sides 11 connected to the conical supports 12, and covered with the cap 13 having the opening 14 in its apex. The cap 13 has formed at its lower edge the flange 15 which joins with the walls 11 a little below the upper end thereof. An inner tube 16 extends from the conical sides 11, a flange 17 of the sides 11 making the necessary connection between the tube 16 and the sides 11. A flange 18 extends from the support 12 and is also connected with the inner tube.

On the outside of the horn 10 is located the outer horn 20 which has the flange 21 extending therefrom, and the

latter is joined with an outer tube 22 that encircles the inner tube 16, and is held in place by the sound insulating rings 23 and 24 (preferably of rubber) which separate the said tubes. A secondary conical support 25 joins with the horn 20, has the flange 26, which latter is secured to the outer tube 22. A stylus 27 extends from the tube 16 in the usual way.

In Fig. 6 I have represented the horn 20 supported by means of an arm 30 of a talking machine 31. The arm 30 is adjustably held in a clamp 32, that is pivoted to a bracket 33 of the talking machine.

The tubes 16 and 22 are preferably made of bamboo stems, although other fibrous material may be used. The outer tube 22 need not necessarily be made of fibrous material.

The inner horn 10 is generally made of paper and the like material, while the outer horn may be of fibrous or other material.

To use the invention it is connected to a talking machine as shown in Fig. 6, the record imparting through the stylus 27 vibrations to the inner tube 16, which vibrations are amplified by the inner horn 10, and modulated by its cap 13. Sound waves recede from the horn 10 and are diffused by means of the outer horn 20, the latter performing the function of a megaphone, carrying and increasing the loudness of the sound coming from the inner horn #10. The sound insulating rings 23 prevent sound waves being directly transmitted from the inner tube to the walls of the outer horn.

Having described *by* invention I claim:

1. In a sound producing device the combination of an inner tube, a horn extending therefrom, an outer tube encircling said inner tube, a sound insulator between the tubes, and a horn extending from the outer tube.

2. In a sound producing device the combination of an inner tube, a horn extending therefrom, an outer tube encircling said inner tube, a sound insulator between the tubes, a horn extending from the outer tube, and a stylus extending from the inner tube.

3. In a sound producing device the combination of an inner tube of bamboo, a horn extending therefrom, an outer tube of bamboo encircling said inner tube, a sound insu-

No. 890,142. PATENTED JUNE 9, 1908.

T. KRAEMER.

SOUND BOX FOR TALKING MACHINES.

APPLICATION FILED OCT. 7, 1907.

Fig. 1,

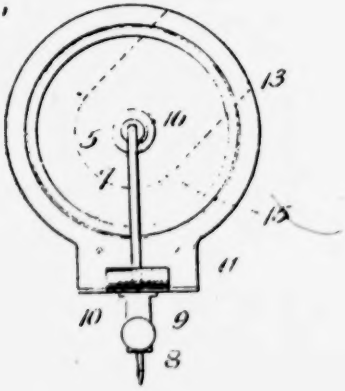

Fig. 2,

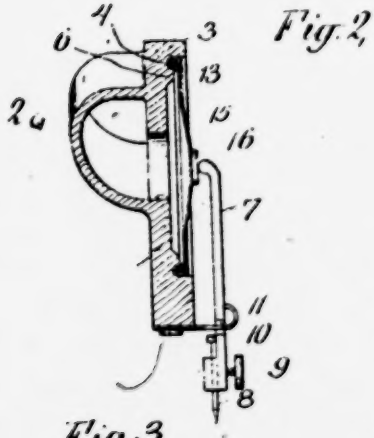

Fig. 3,

WITNESSES:

INVENTOR

Thomas Kraemer,

BY J. C. Edmunds

ATTORNEY

lator between the tubes, a horn extending from the outer tube, and a stylus extending from the inner tube.

4. In a sound producing device for a talking machine the combination of an inner tube of bamboo, a conical horn extending from the tube, a sound insulator around the tube, an outer tube of bamboo around the insulator, and a conical horn extending from the outer tube.

5. In a sound producing device the combination of an inner tube, a horn extending therefrom, a cap having an opening connected with the horn, an outer tube encircling said inner tube, a sound insulator between the tubes, a horn extending from the outer tube and encircling the other horn.

6. In a sound producing device the combination of an inner tube, a horn extending therefrom, a conical support [fol. 252] for the horn supported on the said tube, a cap having an opening secured to the horn, an outer tube encircling the inner tube, sound insulating rings between the outer surface of the inner tube and the inner surface of the outer tube, a horn extending from the outer tube, a support for the outer horn secured to the outer tube, and a stylus connected with the inner tube.

7. In a sound producing device for a talking machine the combination of an inner tube of bamboo, a paper horn having a flange, the flange fastened to the tube, a conical paper support for the horn having a flange, the latter secured to the tube, a pair of rubber sound insulators around the tube, an outer tube of bamboo around the insulators, an outer paper horn having a flange with the latter fastened to the outer tube, a conical paper support for the outer horn having a flange with the latter fastened to the outer tube.

Signed at the borough of Manhattan in the county of New York and State of New York this 4th day of October A. D. 1906.

William C. Smith.

Witnesses: S. G. Van Derbeck, M. H. Cook.

(Here follows drawing, side folio 253)

[fol. 254] United States Patent Office

Thomas Kræmer, of Philadelphia, Pennsylvania, Assignor to Hawthorne & Sheble Manufacturing Company, of Philadelphia, Pennsylvania, a Corporation of Pennsylvania

Sound-Box for Talking-Machines

Specification of Letters Patent

No. 890,142. Patented June 9, 1908

Application filed October 7, 1907. Serial No. 396,135

To all whom it may concern:

Be it known that I, Thomas Kræmer, a citizen of the United States, residing at Philadelphia, in the county of Philadelphia and State of Pennsylvania, have invented a certain new and useful Improvement in Sound-Boxes for Talking-Machines, of which the following is a specification.

This invention relates to sound-boxes for talking machines and has reference more particularly to the construction of the diaphragms for such sound-boxes.

The object of the invention is to effect certain improvements in the construction of such diaphragms to the end that a greater volume of sound is obtained in reproducing a record and that a more faithful reproduction is obtained as a result of the elimination of false sound vibrations.

I have illustrated the preferred embodiment of my invention in the accompanying drawings, in which

Figure 1 is a front view of a sound-box, Fig. 2 is a central section of the same, and Fig. 3 is an enlarged sectional view of the diaphragm alone.

Referring to these drawings, the sound-box is shown as having a main wall 1, a tubular extension 2 leading therefrom for connection to the sound conveying tube, and a circular flange 3 at the outer edge of wall 1 forming the outer wall of the box. Fitting snugly within wall 3 is a rubber strip or ring 4, circular in cross-section, forming a support for the diaphragm 5, this ring being retained in position by a circular ridge 6 integral with and rising from the wall 1. The stylus-lever 7 is pivotally mounted upon the wall 3,

bears at its inner end upon the central portion of the diaphragm, and at its outer end is provided with an opening to receive a stylus 8, the latter being held in its opening by a setscrew 9. In the present instance, I have shown the stylus-lever as provided with notched lugs 10 adapted to receive knife-edges formed on a sheet-metal piece 11 which is secured to wall 1 and whose end forms a spring 12 tending to rock the stylus-lever on its knife-edge pivot in the direction to hold its inner end against the diaphragm.

The method of mounting the diaphragm herein shown with its edge bearing on a rubber ring has proven highly efficient as the rubber absorbs counter-vibrations and thus makes the reproduced sound much more clear. The diaphragm, which is a disk of thin sheet-metal, is of a diameter but little less than the internal diameter of the circular flange 3 and when in proper position it rests upon the rubber ring 4 with its outer edge separated from the interior wall of flange 3 by a narrow space entirely around the diaphragm. It is difficult, however, to get the diaphragm in its position every time it is inserted and to retain it there during long periods of use of the sound-box and if the diaphragm becomes moved out of this position the small amount necessary to carry its edge into contact with the flange 3, the vibrations of the diaphragm will be transmitted to the sound-box and the reproduced sound will be much less clear and distinct. I therefore provide means for centering the diaphragm in position and holding it against such movement as would cause its edge to engage the wall of the box. This is accomplished by providing a circular rib 13 in the diaphragm concentric with and close to the outer edge thereof, such that when the diaphragm is in position, this rib will coact with the rubber ring 4 to obstruct movement of the diaphragm in the plane in which it lies.

In Fig. 2 of the drawings, it will be seen that the rib 13 is in coaction with the ring 4 and would preclude movement of the diaphragm in a vertical direction and that when in this position the edges of the diaphragm are separated from the wall of the sound-box. So long as the diaphragm is held in this position, the danger of transmitting the vibrations thereof to the walls of the sound-box is eliminated.

In diaphragms for sound-boxes as heretofore constructed, especially those which are flat disks, the vibrating area is

small and therefore the air-pressure behind the diaphragm is also small. In accordance with my invention, I construct the diaphragm in such manner that the area of vibration is considerably increased. This is accomplished by pressing a comparatively large portion of the diaphragm at its center out of the plane thereof so that the central portion of the diaphragm swells out to one side. This is shown in Figs. 2 and 3, from which it will be seen that the center 14 of the diaphragm is displaced from the plane of the edge portion [fol. 255] thereof. The inclined portion 15 joining the center 14 and the edge portion includes a considerable part of the total area of the diaphragm and when the stylus-lever is rocked to and fro on its pivot by the undulations of the record-groove, this entire inclined portion is caused to vibrate so that a vibrating area is obtained which is considerably larger than that obtained when a flat disk is employed as a diaphragm. This increased area of vibration results in increased air-pressure behind the diaphragm and both of these combine to give a considerably increased volume of reproduced sound.

The diaphragm above described may be pressed to the desired shape from a disk of sheet-metal and may therefore be manufactured at very low cost. A metallic button 16 is preferably secured to the center of the diaphragm on which the inner end of the stylus-lever bears.

Having now described my invention, what I claim as new therein and desire to secure by Letters Patent is as follows:

1. The combination of a sound-box having an outer wall, a resilient member within said wall, and a diaphragm supported on said member with its edge out of contact with said wall, said diaphragm having a rib therein coacting with said member to prevent movement of the diaphragm in the plane in which it lies, substantially as set forth.

2. The combination of a sound-box having an outer wall, a rubber ring within said wall, a ridge on the sound-box to retain said ring in position, and a diaphragm supported on said ring with its edge out of contact with said wall, said diaphragm having a rib therein close to its outer edge coacting with said member to prevent movement of the diaphragm in the plane in which it lies, substantially as set forth.

T. A. EDISON.

APPARATUS FOR RECORDING OR REPRODUCING SOUNDS.

APPLICATION FILED MAY 24, 1905.

963,362. Patented July 5, 1910.

Fig. 1.

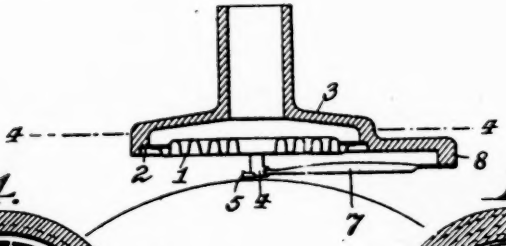

Fig. 4.

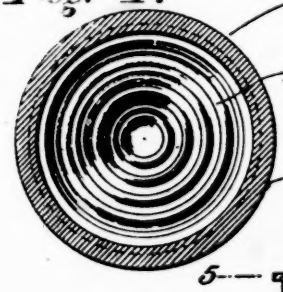

Fig. 5.

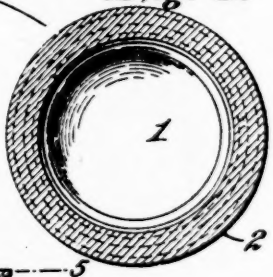

Fig. 2.

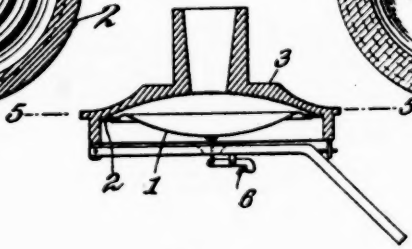

Fig. 3.

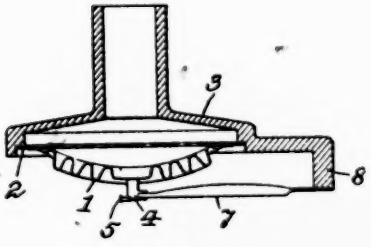

Witnesses:

Edgeworth Greene

Minig C. MacArthur

Inventor

Thomas A. Edison

by Frank L. Dyer

Attorney.

3. The combination of a sound box having a wall and shaped to provide a surface within the box adjacent to said wall for supporting a diaphragm, and a diaphragm supported on said surface, said diaphragm having a rib therein coacting with a part of the box structure to preclude movement of the diaphragm in the plane in which it lies to carry its edge into engagement with said wall of the box, substantially as set forth.

This specification signed and witnessed this 30 day of Septr., 1907.

Thomas Kræmer.

Witnesses: H. Meier, H. Muhlschlegel.

(Here follows drawing, side folio 256)

[fol. 257] United States Patent Office

Thomas A. Edison, of Llewellyn Park, Orange, New Jersey

Apparatus for Recording or Reproducing Sounds

Specification of Letters Patent

963,362. Patented July 5, 1910

Application Filed May 24, 1905. Serial No. 261,950

To all whom it may concern:

Be it known that I, Thomas A. Edison, a citizen of the United States, residing at Llewellyn Park, Orange, in the county of Essex and State of New Jersey, have invented certain Improvements in Apparatus for Recording or Reproducing Sounds (Case B,) of which the following is a description.

My invention relates to various new and useful improvements in apparatus for recording or reproducing sounds, and my object is to provide an apparatus for the purpose which shall permit a more accurate recording of the sound waves free from waves or disturbances, due to the recording mechanism itself, and a more accurate reproduction of the same than is possible by methods and apparatus heretofore known.

In an application for Letters Patent filed on even date herewith, and relating to methods of recording or reproducing sounds, I have pointed out the cause or origin of the false, discordant and inharmonic sounds which are created within the recording mechanism, and which become recorded to affect the character of the reproduction.

With diaphragms as now made a thin plate, or a series of superposed plates, of greatly reduced diameter has been tightly clamped at the edge, so that any vibration mst take place by the flexing or bending of the diaphragm itself. Such a diaphragm, moreover, acts practically as a reed and produces a note of its own, so that it vibrates sympathetically with certain notes within the range of music, and thereby produces inharmonic resultant tones which become recorded with the other sounds. Furthermore, such a diaphragm, in vibrating vibrates locally so as to form a large number of nodes, as has been demonstrated by the production of the so-called Chaladni figures, and these vibratable local areas are also probably responsive to certain musical tones or overtones to result in the production of certain extraneous sounds, which become recorded and mar the reproduction. Moreover, such a diaphragm, owing to its clamped edges, vibrates with relative difficulty, and, hence, is not as sensitive as it should be; and, since it vibrates locally, the local vibrations are not communicated to the recording stylus, and, consequently, a proportionate loss of energy takes place to weaken the recorded sounds.

Notwithstanding the inherent lack of sensitiveness which is characteristic of ordinary diaphragms, the fact is that in the attempt to obviate the production of the inharmonic sounds referred to, it has been the practice to purposely further diminish the sensitiveness of the diaphragm to such an extent that the volume or strength of the inharmonic sounds is reduced so that they are not so prominent; but this practice has been ineffective for the purpose, and the diaphragms are so lacking in sensitiveness that the delicate overtones which accompany the fundamental tones, and which give to music its pleasing quality, are weakened in most cases so as to be practically inaudible, while distortion of the sound sought to be recorded is produced.

In correcting the faults which exist in diaphragms as now constructed, I have produced a diaphragm which is en-

tirely free from any audible fundamental tone or overtone of its own, and which, therefore, does not vibrate sympathetically with any tones within the range of music. I thus prevent not only the distortion of the original sound waves, but I also prevent the production of inharmonic sounds, such as are produced with diaphragms as heretofore made. Furthermore, my improved diaphragm can be and is extremely sensitive, so as to accurately respond to and effect the recording of all fundamental tones as well as their overtones. Finally, with my improved diaphragm, inertia due to weight is reduced to a minimum, and, consequently false vibration caused by overthrow and retardation is largely overcome, this being especially true in the case of vibrations of high frequency. I attain this result by employing a rigid diaphragm of a novel type, which, instead of vibrating in the usual way, vibrates as a whole, the entire displacement taking place at the edges, and I employ with that diaphragm at the periphery thereof an extension or continuation of soft pliable yielding material so as to operate practically as a hinge, the whole having no audible tone within the range of music. I have constructed diaphragms of extreme lightness, and, at the same time, so rigid that the loudest sounds ordinarily used in the art do not set any special local area in vibration sufficient to produce Chaladni figures, so that the whole vibrates or follows the sound waves with great accuracy by being forced.

[fol. 258] In order that the invention may be better understood, attention is directed to the accompanying drawings, forming part of this specification and in which:

Figure 1, is a sectional view of a suitable recording apparatus embodying my present improvements, showing a flat corrugated diaphragm; Fig. 2, a similar view of a reproducing apparatus embodying my improvements showing a dished or concave diaphragm; Fig. 3, a similar view of a recording apparatus, embodying my invention and showing a diaphragm that is both corrugated and dished; Fig. 4, a plan view of the diaphragm shown in Figs. 1 and 3, and Fig. 5, a plan view of the diaphragm shown in Fig. 2.

In all of the above views, corresponding parts are represented by the same numerals of reference.

A diaphragm 1, is shown in Figs. 1 and 4 as being provided with concentric corrugations, made so deep that the

diaphragm acts as a rigid body to sound waves, and vibrates to and fro like a piston without bending or flexing at the center, as with ordinary diaphragms clamped at the edges. The rigidity of the diaphragm is such that if clamped at the edges in the usual way it would not vibrate under the effect of sounds or ordinarily used in this art. Furthermore, the diaphragm is so rigid that it is free from local vibrations which with ordinary diaphragms produce Chaladni figures. The diaphragm shown in Figs. 2 and 5 is dished or scooped for the same purpose, but this is not quite so effective when deep corrugations are used. In any case, the diaphragm should be as light as possible, and be stiff enough to vibrate as a rigid body. It will, therefore, be understood, that the diaphragms may be both dished and corrugated, as shown in Fig. 3, in order that metal of exceeding thinness can be used. Preferably the diaphragm is made of very thin metallic magnesium, which is extremely light and very rigid when corrugated, particularly when both dished and corrugated, and very thin sheets can be used—much thinner in fact than with glass diaphragms as now commonly employed. To this rigid piston-like diaphragm is secured around its outer edge a ring 2, preferably of soft rubber, which is held in place by shellac or other cement, so as to form practically a yielding extension of the diaphragm, and which, when the diaphragm vibrates to and fro, vibrates practically as a hinge having a negligible resistance. The ring 2, may be made of other materials than rubber, such as leather, paper, thin collodion, etc., but thin rubber tissue is preferable for obtaining great sensitiveness. This ring 2, is cemented or otherwise secured without tension to any suitable arrangement of head or body 3, with which a speaking tube, listening tube or horn may be connected

When used for recording purposes a foot 4, carrying a suitable recording stylus 5 (Figs. 1 and 3), is cemented or otherwise secured to the diaphragm. When used with a reproducer, a reproducing stylus 6 (Fig. 2) is preferably pivoted to the usual floating weight and connected to the diaphragm by a link in the usual way.

In order to take the thrust imposed by the rotation of the recording surface with respect to the recording stylus, I extend a link 7, between the foot 4, and an arm 8, depending

from the head 3, said link being made preferably of wood so as to be very light, and having its vertical dimension greater than its transverse dimension, and of constantly varying section reduced to a very thin leaf at the end where it is secured to the arm 8, whereby the formation of nodes will be prevented and the fundamental tone of the link be so grave as to be below the range of ordinary music, as I describe and claim in my application, filed November 13, 1903, Serial No. 180,998. When the diaphragm vibrates it follows the very slight arc which the free end of the link describes, the yielding ring 2, permitting the diaphragm to move laterally to the desired extent, so that there is no cramping in operation.

Since the diaphragm can vibrate only to and fro as a rigid body, like a piston, any yielding is necessarily confined to and takes place entirely within the small free portion of the ring 2, extending between the diaphragm and the cement which holds the ring in place. This yielding section can have no audible local disturbing tone; and hence, all of its movements, as well as those of the diaphragm, are forced, and the recorder is, therefore, caused to accurately follow the sound waves.

Since the action of the diaphragm is analogous to that of a piston subjected to pressure, first on one side and then on the other, it follows that any movements of the yielding section or bulging thereof beyond the movement of the diaphragm will diminish the amplitude of the latter, and for this reason the yielding section should be very thin and the area very small. In practice, I increase the diameter of the rigid diaphragm to as great an extent in proportion to the yielding material as possible, the latter being usually about six per cent. of the whole area. In this way I concentrate nearly the whole of the condensations and rarefactions of the sound waves upon the diaphragms proper, so as to cause it to give the maximum response thereto, and prevent, to the greatest possible extent, loss of pressure due to yielding of the yielding section.

[fol. 259] When a rigid diaphragm of my improved type is used in connection with reproducing apparatus a number of advantages are secured, as when employed with a recording apparatus. In the first place, owing to its extreme sensitiveness, the diaphragm accurately follows and re-

sponds to the recorded sounds; and, owing to its extreme lightness, inertia is reduced to a minimum so as to reduce the tendency of the diaphragm to leave the record, particularly when the recorded waves are very deep or of high frequency. Furthermore, the great lightness of the diaphragm materially reduces wear upon the unrecorded surface. In the next place, since the diaphragm is free from any fundamental tone or overtone of its own, it cannot respond sympathetically with any of the recorded sounds to thereby distort the reproduction and make it inharmonic. Finally, since the diaphragm is incapable of vibrating locally, the creation of extraneous sounds from that cause in the reproduction is also overcome.

While I have described my improved apparatus in connection with the recording and reproduction of sounds phonographically, and wherein the recorded forms, or the reproducer follows, a record of varying depth, it will be understood that the apparatus can be effectively utilized with machines of the gramophone type, wherein a zig-zag record groove is formed, it being only necessary in the latter case to connect the diaphragm with a recorder adapted to form, or with a reproducer adapted to follow, such a zig-zag record groove.

Having now described by invention what I claim as new therein and desire to secure by Letters Patent is as follows:

1. In apparatus for recording or reproducing sounds, the combination of a body and a very thin diaphragm formed of a light metal, said diaphragm being dished or concave, and provided with deep concentric corrugations, said diaphragm being connected to said body by a hinge of a material having greater pliability than that of the diaphragm, substantially as set forth.

2. In apparatus for recording or reproducing sounds, the combination of a body and a very thin diaphragm formed of magnesium, said diaphragm being dished or concave, and provided with deep concentric corrugations, said diaphragm being connected to said body by a hinge of a material having greater pliability than that of the diaphragm, substantially as set forth.

3. In apparatus for recording or reproducing sounds, a very thin diaphragm formed of a light rigid and elastic metal, said diaphragm being dished or concave for practically its whole width, and provided throughout with deep concentric corrugations, substantially as set forth.

4. In apparatus for recording or reproducing sounds, the combination with a body and a diaphragm secured thereto by a hinge of yielding material so as to be capable of lateral movement, or a stylus connected to said diaphragm and a light rod anchored at one end and connected at its other end to said stylus for receiving the thrust thereof, said rod being so shaped as to give forth no audible tone in vibrating, substantially as set forth.

5. A diaphragm made of metallic magnesium and having a concave portion formed with concentric corrugations, substantially as set forth.

6. A diaphragm made of metallic magnesium and united to a circumferential section of small area composed of material having greater pliability than magnesium and which is adapted to operate as a hinge under the movements of the diaphragm, substantially as set forth.

This specification signed and witnessed this 20th day of May, 1905.

Thos. A. Edison.

Witnesses: Frank L. Dyer, Anna R. Klehm.

Corrections in Letters Patent No. 963,362

It is hereby certified that in Letters Patent No. 963,362, granted July 5, 1910, upon the application of Thomas A. Edison, of Llewellyn Park, Orange, New Jersey, for an improvement in "Apparatus for Recording or Reproducing Sounds," errors appear in the printed specification requiring correction as follows: Page 2, line 37, after the word "effective" the word *as* should be inserted; page 3, line 19, the word "recorder" should read *recorded;* and that the said Letters Patent should be read with these cor-

rections therein that the same may conform to the record of the case in the Patent Office.

Signed and sealed this 20th day of September, A. D. 1910.

C. C. Billings, Acting Commissioner of Patents.

(Seal.)

(Here follow drawings, side folios 260, 261, 262, 263, and 264)

[fol. 265] United States Patent Office

Louis Lumiere, of Lyon, France

Acoustical Instrument

Specification of Letters Patent

986,477. Patented Mar. 14, 1911

Application Filed June 30, 1909. Serial No. 505,149

To all whom it may concern:

Be it known that I, Louis Lumiere, a citizen of the Republic of France, residing at Lyon, in the Republic of France, have invented certain new and useful Improvements in Acoustical Instruments, of which the following is a full, clear, and complete disclosure.

This invention relates to improvements in acoustical instruments, such as telephones, microphones, sound recording and reproducing machines, and musical instruments in general. As applied to sound recording and reproducing apparatus, it relates more particularly to that part of the instrument which is generally known as the diaphragm, or the body which in the process of sound recording is thrown into vibration by the sound waves, and whose vibrations are traced and recorded by means of a stylus in the original record, while in the process of reproduction the diaphragm, (as a general rule, the diaphragm of a separate machine), is thrown into corresponding vibrations by a stylus to which it is attached being made to follow the undulations in the record.

L. LUMIERE.

ACOUSTICAL INSTRUMENT.

PPLICATION FILED JUNE 30, 1909.

986,477. Patented Mar. 14, 1911.

5 SHEETS—SHEET 1.

Fig. 1.

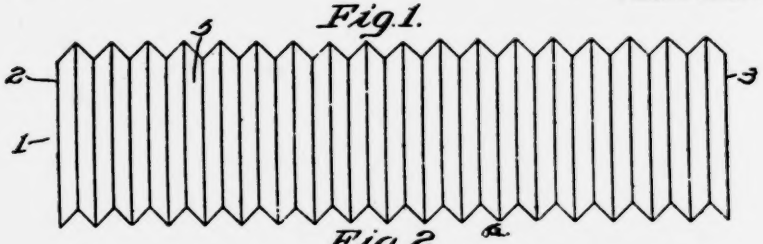

Fig. 2.

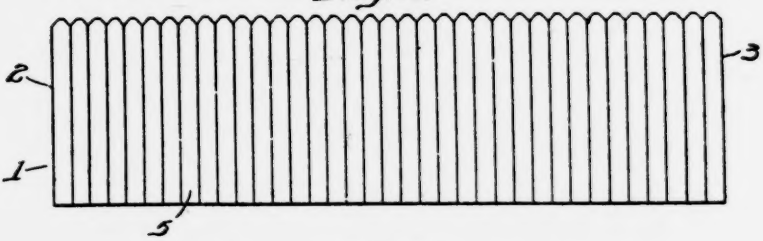

Fig. 3.

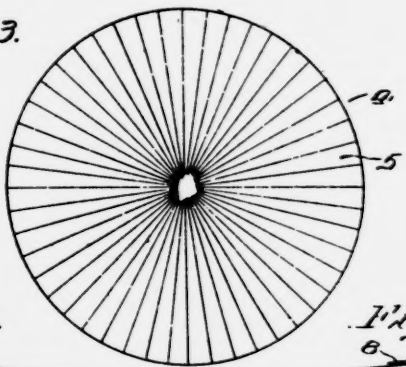

Fig. 4.

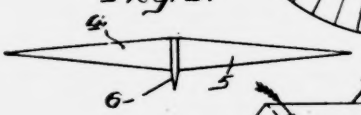

Fig. 5.

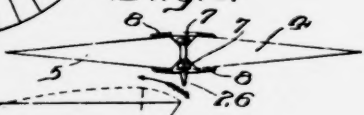

Fig. 6.

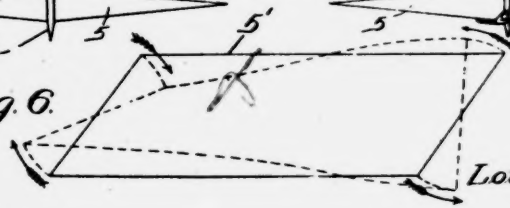

INVENTOR
Louis Lumiere

WITNESSES
F. G. Hartman.
Alston B. Moulton

BY Horace Pettit.

ATTORNEY

L. LUMIERE.

ACOUSTICAL INSTRUMENT.

APPLICATION FILED JUNE 30, 1909.

986,477. Patented Mar. 14, 1911.

5 SHEETS—SHEET 3.

Fig. 7.

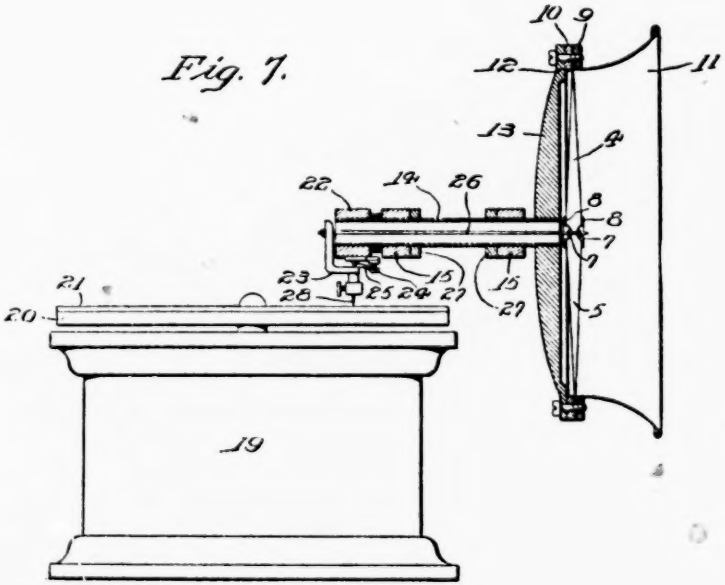

Fig. 7ª

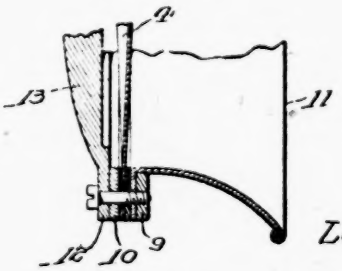

WITNESSES

A. J. Hartmann.

Alston B. Moulton

INVENTOR

Louis Lumiere.

BY Howe Pettit.

ATTORNEY

L. LUMIERE.

ACOUSTICAL INSTRUMENT.

APPLICATION FILED JUNE 30, 1909.

986,477. Patented Mar. 14, 1911.

6 SHEETS—SHEET 3.

Fig. 8.

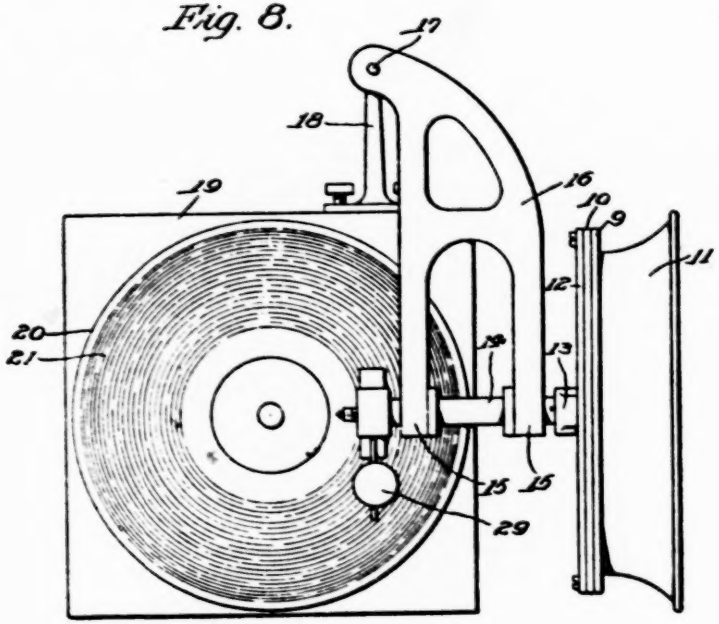

INVENTOR

Louis Lumiere.

WITNESSES

F. J. Hartman.

BY

ATTORNEY

L. LUMIERE.
ACOUSTICAL INSTRUMENT.
APPLICATION FILED JUNE 30, 1909.

986,477. Patented Mar. 14, 1911.

5 SHEETS—SHEET 4.

Fig. 9.

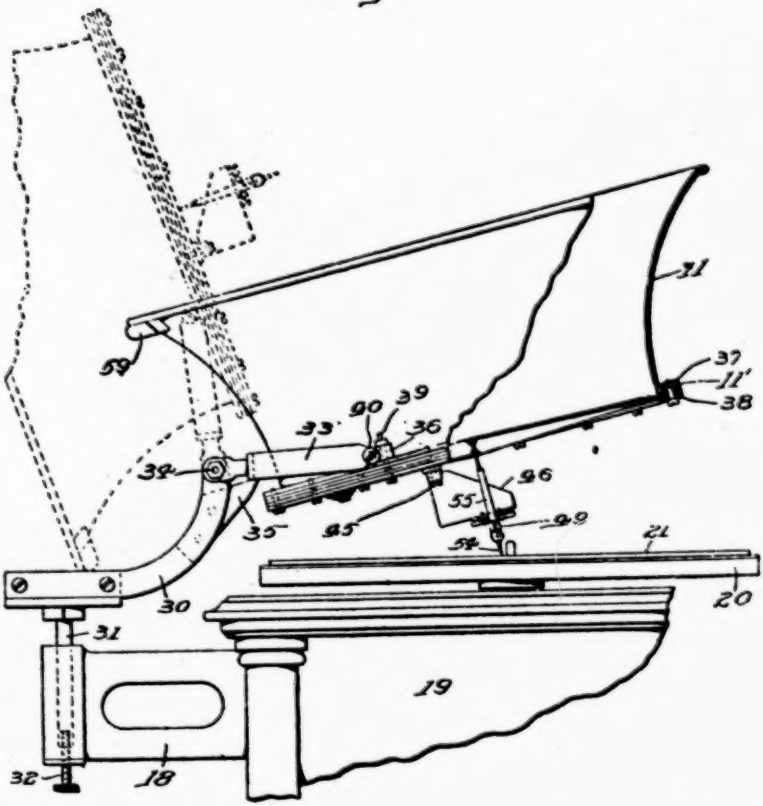

INVENTOR
Louis Lumiere

WITNESSES
F. J. Hartman.
Alexander B. Moore

BY Horace Pettit.
ATTORNEY

L. LUMIERE.

ACOUSTICAL INSTRUMENT.

APPLICATION FILED JUNE 30, 1909.

986,477. **Patented Mar. 14, 1911.**

5 SHEETS—SHEET 5.

Fig. 10.

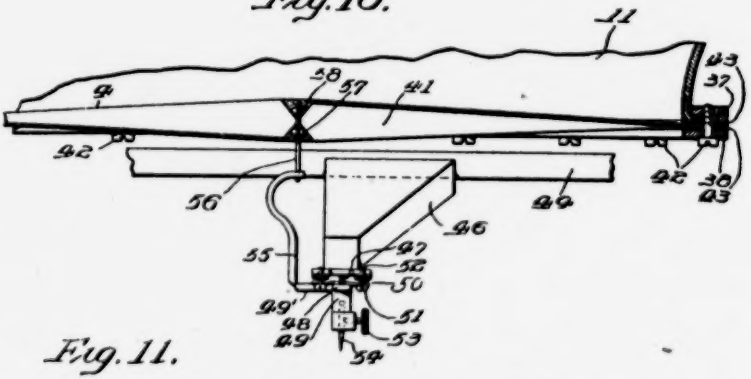

Fig. 11.

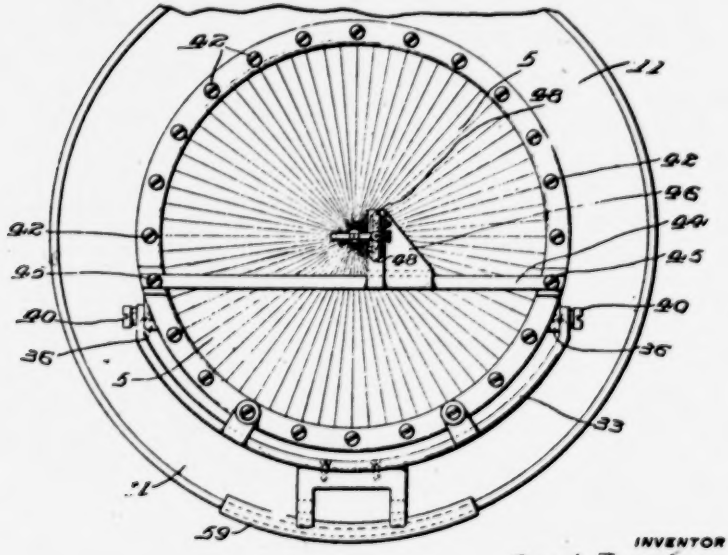

INVENTOR

Louis Lumiere.

WITNESSES

F. J. Hartman.

BY Horace Pettit.

ATTORNEY

The invention also relates to the sound box in which said diaphragm is mounted.

The object of my invention is to provide a diaphragm and a mounting therefor, by means of which sounds may be faithfully recorded and reproduced, which will be sensitive to sound waves and by the use of which the reproduction of sound will be improved and amplified.

Further objects of my invention are to increase the reproducing surface of a diaphragm, and, at the same time, to place the entire surface under a tension, (preferably torsional), to make it sensitive; to increase the active surface of a diaphragm of a certain given diameter; to increase the diameter of the diaphragm without making it liable to vibrate in parts, or to set up nodes or inactive portions in the diaphragm, or in other words, to substantially increase the size of the diaphragm and, at the same time, have it vibrate throughout; to construct a diaphragm having a plurality of sound responsive elements, each of which is subjected to a molecular tension, and to subject each of a plurality of sound responsive elements to a molecular tension to increase the sensitiveness thereof and to cause them to vibrate as a whole.

Further objects of my invention will be found in the specification and claims below.

The invention consists in a diaphragm for acoustical instruments, having one or more freely resilient, sound responsive surfaces or elements, which have been brought into a condition of molecular stress, of an aggregate superficial area substantially larger than the surface of a plane disk of the same diameter, and in a recorder or reproducer in which said diaphragm is mounted.

It is found that the effect of bringing the surfaces of a vibrating body into a condition of molecular stress by torsion, is to reduce by a minimum the tendency of the vibrating body to form nodes during operation, so that the surface or surfaces of the diaphragm will vibrate as a whole and will not produce the disagreeable effect which is technically known as blasting or shattering.

One construction of diaphragm made according to this invention and the method of making it is illustrated in the accompanying drawings, in which:—

Firgue 1 shows a folded strip of material from which the improved diaphragm may be made: Fig. 2 is a plan view of a modified form of folded strip of material from which a diaphragm may be made; Fig. 3 is a plan view of the diaphragm; Fig. 4 is a sectional elevation of the diaphragm; Fig. 5 is a sectional elevation view of a slightly modified form of diaphragm; Fig. 6 is a diagram to illustrate the way in which the surfaces or elements of the diaphragm are twisted; Fig. 7 is an elevation of a sound reproducing machine fitted with the diaphragm made in accordance with this invention and illustrates a convenient method of carrying the diaphragm and connecting it to the stylus bar; and Fig. 7a is a sectional detail of Fig. 7. Fig. 8 is a plan view of the machine shown in Fig. 7; Fig. 9 is a side elevation view partly in section of a modified form of sound reproducing machine provided with my invention; Fig. 10 is an enlarged view, partly in section, of the diaphragm and stylus bar mounting shown in Fig. 9; and Fig. 11 is a bottom plan view of the reproducer shown in Fig. 9.

According to one method of carrying out this invention, a diaphragm is constructed so that it presents the form shown in Figs. 1, 3, and 4 of the accompanying drawings, in which [fol. 266] the whole surface of the diaphragm on either side consists of a plurality of elements reversely flexed to form a fan-like series of radially disposed ridges and furrows, the ridges on one side of the diaphragm corresponding to the furrows on the other side of the diaphragm, and the furrows gradually widening out and becoming less deep as they approach the edge of the diaphragm until at its perimeter the diaphragm lies in one plane. The elements forming the sides of the ridges and furrows provide the desired freely resilient sound responsive surfaces. A diaphragm of this form may be obtained by folding or plaiting a substantially rectangular strip of paper 1, or other suitable material in the manner shown in Fig. 1. The length of the strip of material before folding should be substantially the length of the circumference of the diaphragm to be formed therefrom, and the width of the strip should be substantially equal to the radius of the said diaphragm. When the strip has been plaited or folded in the manner above described and shown, the ends 2 and 3 should be brought together and secured to each other in any suitable

manner. At this stage of the process or method, the strip will present, roughly speaking, the appearance of a cylinder having fluted sides. This strip of material is then pressed down and forced to assume the form shown in Figs. 3 and 4, one edge of the strip being crimped together at the center, and the other edge forming the perimeter; the radial ridges and furrows, or plaits being closest together and of greatest depth at the center, and gradually opening out and flattening toward the edge where the diaphragm may be held in one plane between clamping rings, as shown in Figs. 7 to 11. In Fig. 3 the diaphragm is designated as 4 and the elements forming the plaits or ridges and furrows are designated by the numeral 5. The diaphragm 4 thus formed in the manner above described will be seen to have a surface formed wholly of a multiplicity of flexed sound responsive elements, reversely sloped or angled to each other, forming dihedral ridges. The surface of the diaphragm will consist of a surface comprising salient radial angled surfaces, and radial reëntrant angled surfaces. Any sector of the surface will have a fan-like formation.

To the center of the diaphragm, is attached, in any suitable manner, the recording or reproducing stylus 6, as the case may be. As shown in Fig. 4, the diaphragm is for use with or for a record having an up and down, or vertical cut, since the diaphragm is directly provided with a stylus at its center.

For making the attachment between the stylus and diaphragm, or between the connection between the stylus and the diaphragm, I prefer to bevel off the inner edge of the diaphragm as particularly shown in Figs. 2, 9 and 10. The stylus 6 may be secured directly to the inner edges of the elements of the diaphragm by being cemented or glued thereto in the manner shown in Fig. 4, or it may be secured in place by means of nuts 7, as will be more particularly described below, in connection with the form of apparatus shown in Figs 9 and 10 and also as shown in Fig. 5. The stylus 6 may also be surrounded by rings of stiff paper 8, secured on either side of the diaphragm at the center thereof to give it additional rigidity at that point. I do not, however, limit myself to this form of connection. The effect of constructing the diaphragm in this manner, is that the whole diaphragm, i. e., the surface of each element of

each ridge and furrow is under molecular stress, produced by torsion, but the sides of the ridges and furrows are twisted out of the plane in which they lie at the center of the diaphragm into a plane, practically at right angles thereto at the circumference of the diaphragm. I have further found that in a diphragm produced by this means, the tendency of the vibrating body to form nodes during operation is reduced to a minimum. The surface of each of the elements composing this diaphragm being helicoidal, and since each point in the vibrating body, as it moves, follows a direction normal to the tangential plane at this point, the result is that the direction of movement is different for each point that has to be considered so that the formation of nodes is practically impossible. It is obvious, of course, that the same condition of molecular stress would be produced upon twisting a sheet of material which naturally possessed a helicoidal or other than plane form so as to take up a position in a true plane, or other helicoidal form of different pitch.

The diaphragm shown in Fig. 6, illustrates clearly the torsion which is applied to each of the multiple surfaces or elements of the diaphragm when the strip of material is made to take up the form shown in Figs. 3 and 4 from the form shown in Fig. 1. In this diagram 5′ represents a thin flat sheet of elastic material, such as is formed by each of the several folds or plaitings of the strip shown in Figs. 1 and 2. If the two ends of this sheet are turned in opposite directions, as indicated by the arrows, and are made to take up the position shown in dotted lines, it is found that a very resilient body is formed, which is capable of vibrating more readily, and is more sensitive, i. e., more sound responsive in its new position than it was before. This is probably due to the molecular stress which is imparted to it by this twisting action. It will be clear that each of the surfaces [fol. 267] or folds 5, of the diaphragm illustrated in Figs. 3 and 4 is in the same condition of molecular stress, as the sheet 5′ in Fig. 6.

The width of the folds 5, relative to the breadth of the strip in which they are made, may vary; but I have found a convenient proportion to adopt when making the diaphragm of paper is about 10 to 1, so that each fold of the strip is 10 times as long as wide.

I have found that in a diaphragm having multiple resilient surfaces such as that above described, a greatly improved reproduction can be obtained. Moreover, a diaphragm constructed in the manner above described can be usefully made of considerably greater diameter than has heretofore been possible. Experience has seemed to prove that a plane diaphragm of mica, or other material such as is used at the present day, if made of more than about three-and-a-half inches in diameter, loses in quality of reproduction, the reproduction becoming less musical and there being a liability to what there is technically known as "shattering," due probably to the diaphragm not vibrating as a whole, i. e., to the setting up of nodes in the diaphragm. I have found, however, that I am able to make a diaphragm according to the present invention, as large as ten inches or more in diameter, without impairing the quality of the reproduction, and by means of this diaphragm, I at the same time, attain a much greater volume of sound than with the smaller diaphragm. This amplification of the sound, I believe to be due, not only to the increased diameter of the diaphragm, but also to the increased surface area of the diaphragm produced in the construction above described, by the plaitings or crimpings or folds in the material of the diaphragm; this appears to have the effect of putting into motion a greater volume of air and so increasing the volume of sound.

A diaphragm having freely resilient sound responsive surfaces brought into a condition of molecular stress, preferably by torsion, and also of an aggregate area substantially larger than a plane disk of the same diameter may of course be produced in other ways than that above described. I have found, however, that the above described method is a convenient one for making the diaphragm.

The advantage arising from the use of a diaphragm constructed as above described, is that the volume of sound produced is sufficient to enable me to dispense with the usual amplifying horn, and in this way, much of the metallic and hollow character usually associated with talking machine reproductions is eliminated.

Diaphragms may be made according to this invention, of any suitable elastic material, such as paper, (which may be varnished if desired), card, celluloid, metal, or the like,

and the surface, or surfaces, of the diaphragm, or elements composing the vibrating body, may be put under tension by any suitable means.

One means of mounting the stylus bar and diaphragm in an operative position particularly for use with a record having a record of sound in the form of a groove having lateral undulations in the walls thereof is shown in Figs. 7 and 8. In this case, the diaphragm 4 is held at the edges by clamping rings 9 and 10, and, to the front ring 9, may be secured a small trumpet 11 for directing the sound waves. The clamping ring 10 is fixed to a suitable backing ring 12, having radial arms 13 by which the same is carried by a tube 14 which is capable of turning freely in the bearings 15—15, of the swinging arm 16, pivoted at 17 upon a rigid bracket 18, fixed to the cabinet 19. The cabinet 19 is provided with a suitable mechanism for rotating the turn-table 20 upon which a record 21 is carried in the usual manner.

The tube 14 is provided at one end with a mounting 22 freely rotatable upon said tube 14, but prevented in any suitable manner, from longitudinal movement upon the tube 14. This mounting 22 carries a stylus bar 23 which may be mounted thereon in any suitable manner, as by being pivoted on the knife edges 24, and retained on said knife edge bearings by a spring 25, in the usual manner. The upper end of the stylus bar 23 is connected by a rod 26 with the diaphragm 5, the rod 26 being connected or attached to the diaphragm by nuts 7 in the manner shown in Fig. 5. In this construction as shown in Figs. 7 and 8, the diaphragm is preferably made from a sheet of material such as is shown in Fig. 2 of the drawings so as to provide a suitable recess on each side of the diaphragm, in which the nuts 7 are seated. These nuts may be further cemented or otherwise secured to the diaphragm. In the said figures the diaphragm is also shown as being provided with a stiffening ring 8 at the center of the diaphragm and surrounding the stylus bar connection 26. Suitable nuts or collars 27 may be employed for holding the tube 14 from lengthwise movement in the bearings 15.

As the stylus 28 follows the record groove, the arm 16 will swing across the record on the pivot 17, and the mounting 22, carrying the stylus bar 23, will oscillate around the tube 14 with any unevenness in the rotation of the rec-

ord. A suitable weight 29 may be attached to the mounting 22, to cause the stylus to engage the record with the requisite amount of pressure.

In Figs. 9, 10 and 11, I have illustrated a further modifi- [fol. 268] cation of the way in which my diaphragm may be used in connection with a sound reproducing machine. In said figures, the record 21 is supported upon and rotated by a turn-table 20 driven by any suitable motor within the casing 19, and the cabinet is provided with a bracket 18 similar to the arrangement above described in connection with Figs. 7 and 8. An arm 30 is mounted upon a steam or pintle 31 to swing on said bracket in a plane substantially parallel with the plane of the record 21. The bracket 18 may be provided with a vertically adjustable step 32 for the end of the stem 31, which, in the form illustrated in Fig. 9, consists of a screw threaded into the bracket 18, and against which the end of the stem or pintle 31 rests. By this means, the arm 30 may be raised or lowered to adjust the parts carried thereby with respect to the record 21 on the turn-table 20, to set the stylus at the proper angle to the record surface. The free end of the arm 30 carries a yoke 33 pivoted to the said arm by a bolt or pin 34, so as to be capable of swinging in a plane substantially perpendicular to the plane of the record. The said arm 30 is provided with a stop 35, which prevents the yoke from swinging downwardly beyond a predetermined point. The outer ends of the yoke 33 are secured to lugs 36 bolted to the rings 37, 38, by bolts 39, passing through said rings and said lug. Screws 40, passing through the ends of the yoke 33 and into the lugs 36, from the pivots to permit the rings and the parts carried thereby, to oscillate thereon. The diaphragm 41 is of the kind which I have described above; that is to say, the diaphragm is formed by reversely folding a sheet of material to form plaits, each plait forming an element of the diaphragm, and each of these plaits or elements is subjected to a torsional tension or strain by the bringing of the folded or plaited sheet of material into a substantially circular form. In these Figs. 9 to 11, the diaphragm is shown practically as being formed from a sheet of material such as is shown in Fig. 2; that is to say, a strip in which each plait is cut away at its inner corners so as to form a recess on each side of the center of the dia-

phragm to permit of a convenient attachment of the stylus bar to the diaphragm. As is plainly shown in Fig. 10, the diaphragm 41 is clamped between the rings 37 and 38, and securely held in that position by means of the screws 42 passing through the said rings and drawing them together. I prefer however, to interpose, between the rings 37 and 38, and the diaphragm, thin rings 43—43 of a suitable non-metallic and preferably slightly elastic material, one on each side of the diaphragm. These rings 43, may be of fabric, or rubber, or fiber, or any other suitable material to prevent an actual contact between the diaphragm and the metallic rings 37 and 38, and to securely hold the periphery of the diaphragm in a single plane. A suitable small trumpet 11 may be also secured between the rings for the purpose of directing the sound waves. I have shown it plainly in Figs. 9 and 10 as composed of a slightly flaring substantially conical member having a flange 11′ clamped between the rings 37 and 38, the screws 22 passing therethrough. The periphery of the diaphragm 41 is clamped between the intermediate rings 43, and held thereby in a single plane as plainly shown in Fig. 10.

The bottom of the reproducer is provided with a suitable support for the stylus bar, said support comprising a bar 44 secured to the ring 38 by screws 45, or in any other suitable manner. The said bar 44 may carry a block 46 rigidly secured thereto and upon the lower side of said block, I mount the stylus bar. Any suitable mounting for the stylus bar may be employed, but in the said modification illustrated in Figs. 9 to 11, I have shown the block 46 as provided with a pair of alined knife edges 47 engaging suitable recesses and lateral extensions 48 of the stylus bar 49. Each lateral extension is provided with a spring 50, one end of which is attached to said extension 48, and the other end of which extends outwardly and is provided with a hole through which a screw 51 passes, the head of the screw engaging the end of said spring 50 and the screw being threaded in a suitable tapped plate 52 carried by the said block 46. In this way the stylus bar is yieldingly held upon the knife edges 47, but is free to oscillate upon them as bearings. The lower end of the stylus bar is provided with a suitable set screw 53 for securing the stylus 54 in the socket therein. The stylus bar 49 may have a portion

49′ extending at an angle to the stylus carr-ing portion and it may then extend upwardly as at 55 to this point of attachment to the center of the diaphragm. I have shown the said upwardly extending portion 55 as being curved in order to make it slightly yielding, and the point between the portions 49′ and 55 as being materially weakened to enable the stylus bar to readily bend or spring or give slightly at this point to transform the vibratory movement of the stylus into a reciprocatory movement of the portion 55 which is directly attached to and consequently communicates its motion to the center of the diaphragm.

In adjusting the reproducer to the recorded surface, the arm 30 should be set at such a height that the stylus will be given a slight rake to the recorded surface, as plainly shown in Fig. 9. This will permit the record to slide freely beneath the stylus without unduly scratching the same and cause the stylus to engage the record with [fol. 269] a sufficient pressure to insure the tracking of the stylus in the record groove. The record may then slide freely beneath the stylus, and the whole reproducer may swing slightly on the bolts or pins 40 to allow for any irregularity or unevenness or warp in the recorded surface.

In order that the stylus may not bear too heavily upon the record, the trumpet 11 may be provided with a suitable counterbalance-weight 59.

From the preceding description it will be plain that the whole construction is such that the trumpet, diaphragm, rings and stylus attached thereto may be swung upwardly about the bolts or pin 34 as a pivot for the purpose of replacing the stylus or for throwing the whole device into an inoperative position, as indicated in dotted lines in Fig. 9.

In operation it will be apparent that when the record is given a rotary movement from the turn-table 20 and the stylus 54 engages the record 21, the whole reproducer will swing about the stem or pintle 31 as a pivot allowing the needle or stylus 54 to track across the record and the stylus will be caused to assume the correct angle to the recorded surface by the adjustment of the step 32 against which the stem or pintle 31 abuts, and further, that the stylus will be prevented from bearing too heavily upon the record by the

counter-weight 59 attached to the upper end of the trumpet 11.

In all the forms which I have above described, it will be seen that the diaphragm is constructed upon the same principle, and that it is mounted in substantially the same manner, and that any suitable manner of securing the stylus to the center of the diaphragm may be employed, and while I have shown a small trumpet 11 in connection with the constructions which I have illustrated, it is to be understood that the trumpet may be entirely dispensed with if desired, the function being to give direction to the sound waves rather than to increase the volume of the sound reproduced by the diaphragm.

Having thus described my invention, what I claim and desire to protect by Letters Patent of the United States, is:

1. The method of making a diaphragm which consists in plaiting a strip of flexible material, joining the ends of the plaited material and bringing the same to a circular shape to form a diaphragm in which each of the plaits forms an element subjected to torsional tension.

2. The method of making a diaphragm which consists in plaiting a strip of flexible material, joining the ends of the plaited material and subjecting each of the plaits to a torsional tension.

3. The method of making a diaphragm which consists in reversely folding a strip of flexible material into a series of plaits, removing a corner of each of said strips, bringing the ends of said plaited material together and forming the same into a substantially circular shape having radial salient and reëntrant angles.

4. The method of making a diaphragm which consists in reversely folding a strip of flexible material, twisting the folded sheet into substantially circular shape and rigidly holding the edges of the diaphragm so formed in a single plane.

5. The method of forming a diaphragm, which consists in plaiting a substantially rectangular strip of material, removing a corner of each plait on one side of the strip, uniting the ends of the strip and forming the said material into a substantially circular diaphragm, each of the plaits forming an element of the diaphragm with its edge at the center of the diaphragm substantially parallel to the axis of the

L. LUMIERE.
ACOUSTICAL INSTRUMENT.
APPLICATION FILED MAR. 28, 1910.

1,036,529. Patented Aug. 20, 1912.
5 SHEETS—SHEET 1.

Fig. 1.

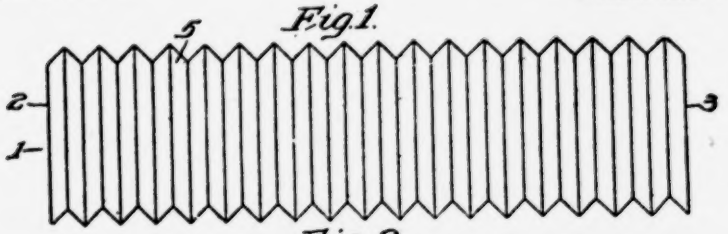

Fig. 2.

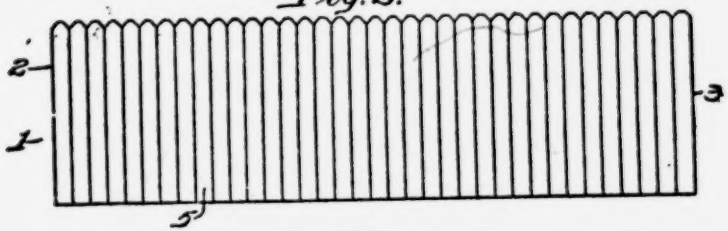

Fig. 3.

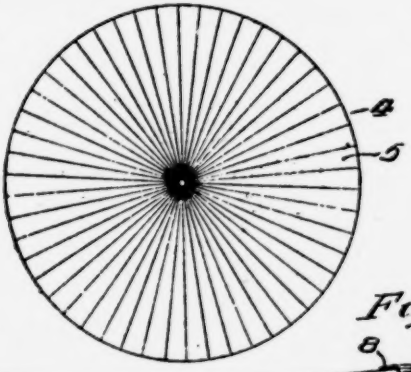

Fig. 4.

Fig. 5.

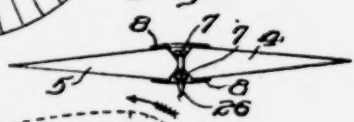

Fig. 6.

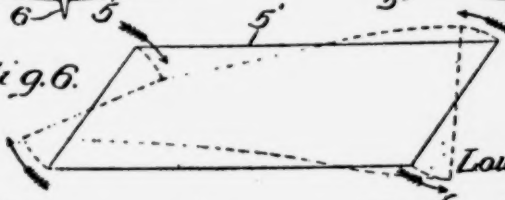

INVENTOR
Louis Lumiere.

WITNESSES
F. J. Hartman.
J. Hinderam

BY Horace Pettit
ATTORNEY

L. LUMIERE.
ACOUSTICAL INSTRUMENT.
APPLICATION FILED MAR. 26, 1910.

1,036,529. Patented Aug. 20, 1912.

5 SHEETS—SHEET 2.

Fig. 7.

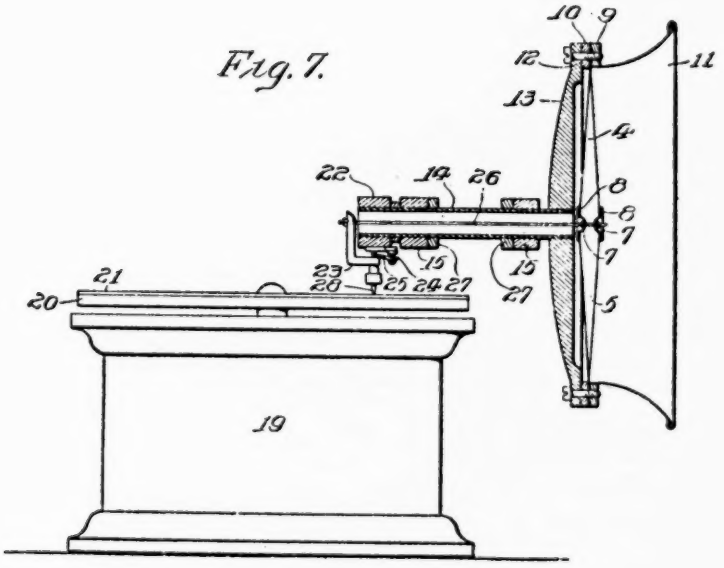

Fig. 7.a

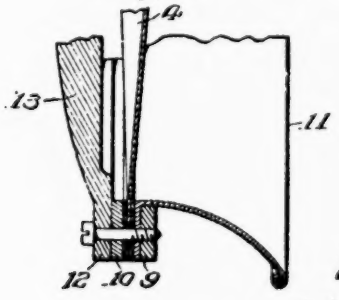

INVENTOR
Louis Lumiere.

WITNESSES
F. J. Hartman.
J. Henderson

BY Horace Pelly

ATTORNEY

L. LUMIERE.
ACOUSTICAL INSTRUMENT.
APPLICATION FILED MAR. 26, 1910.

1,036,529. Patented Aug. 20, 1912.
5 SHEETS—SHEET 3.

Fig. 8.

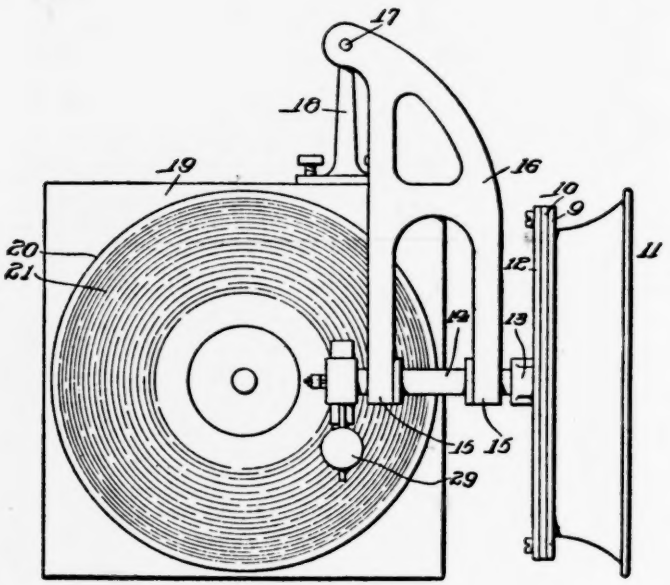

INVENTOR
Louis Lumiere

WITNESSES
J. Hartman.
F. Kinderer

BY Horace Pettit
ATTORNEY

L. LUMIERE.

ACOUSTICAL INSTRUMENT.

APPLICATION FILED MAR. 26, 1910.

1,036,529.

Patented Aug. 20, 1912.

5 SHEETS—SHEET 4.

Fig. 9.

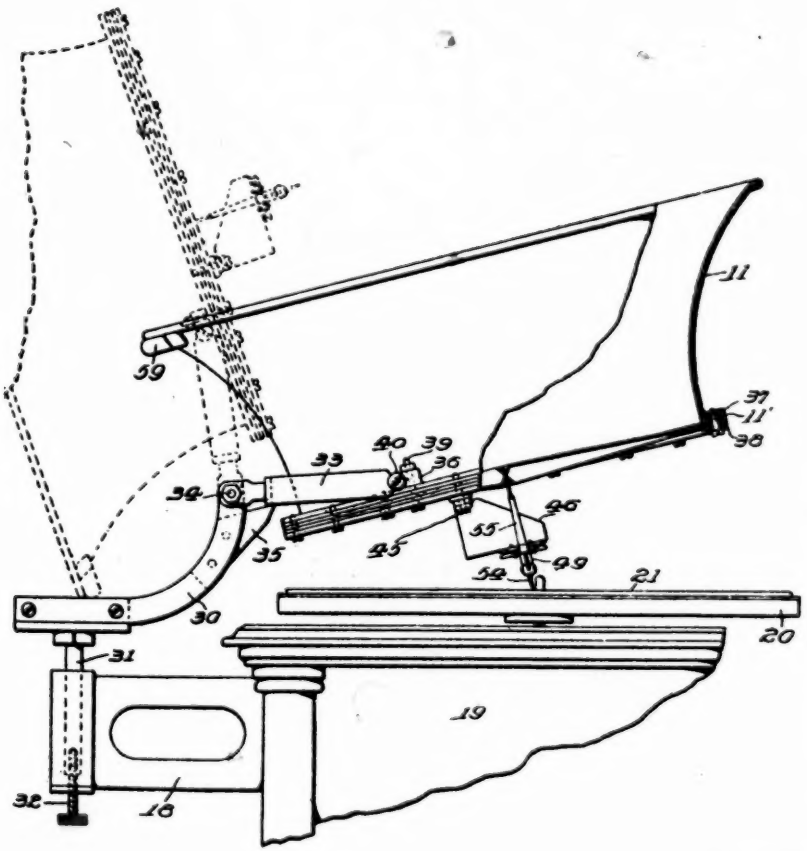

INVENTOR

Louis Lumiere.

WITNESSES

W. J. Whitman.

J. Henderson

BY

ATTORNEY

L. LUMIERE.
ACOUSTICAL INSTRUMENT.
APPLICATION FILED MAR. 26, 1910.

1,036,529. Patented Aug. 20, 1912.
5 SHEETS—SHEET 5.

Fig. 10.

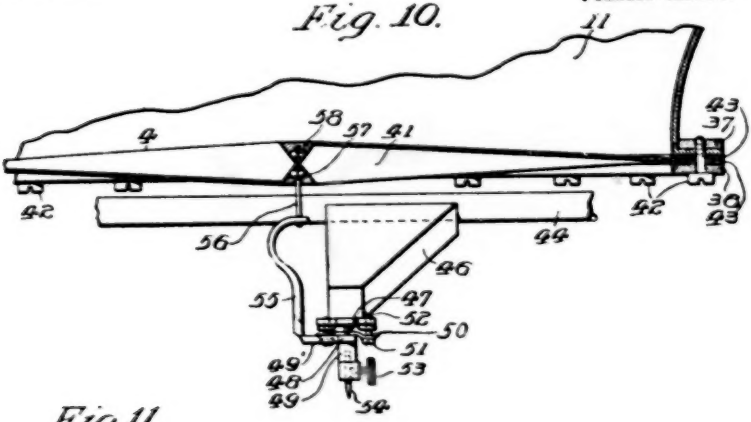

Fig. 11.

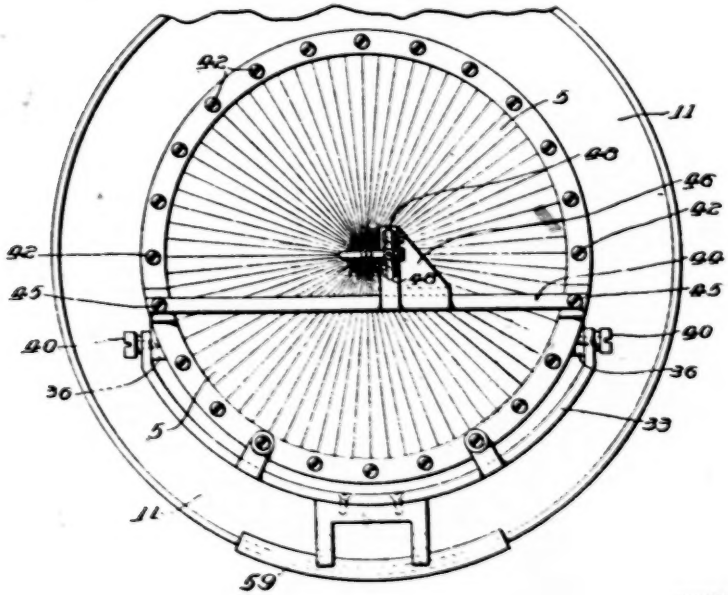

INVENTOR
Louis Lumiere.

WITNESSES
A. J. Hartmann
J. Henderson

BY Horace Pettit
ATTORNEY

diaphragm and the edge of each plait at the periphery of the diphragm being brought to substantially a single plane.

6. The method of forming a diaphragm, which consists in plaiting a substantially rectangular strip of material, uniting the ends of the strip and forming the said material into a substantially circular diaphragm, each of the plaits forming an element of the diaphragm with its edge at the center of the diaphragm substantially parallel to the axis of the diaphragm, the edge of each plait at the periphery of the diaphragm being brought to substantially a single plane, and securing an annular strip of stiffening to the edges of the elements adjacent the center of the diaphragm.

In witness whereof I have hereunto set my hand this fourth day of June, A. D. 1909.

Louis Lumiere.

Witnesses: L. N. Reddie, A. J. Cooley.

[fol.270] Corrections in Letters Patent No. 986,477

It is hereby certified that in Letters Patent No. 986,477, granted March 14, 1911, upon the application of Louis Lumiere, of Lyons, France, for an improvement in "Acoustical Instruments," errors appear in the printed specification requiring correction as follows: Page 4, line 9, the word "steam" should read *stem*, and same page, line 100, the word "suitable" should read *suitably;* and that the said Letters Patent should be read with these corrections therein that the same may conform to the record of the case in the Patent Office.

Signed and sealed this 11th day of April, A. D., 1911.

C. C. Billings, Acting Commissioner of Patents.

(Seal.)

(Here follow drawings, side folios 271, 272, 273, 274, and 275)

[fol. 276] United States Patent Office

Louis Lumiere, of Lyons, France, Assignor to Victor Talking Machine Company, of Camden, New Jersey, a Corporation of New Jersey

Acoustical Instrument

Specificaton of Letters Patent

1,036,529. Patented Aug. 20, 1912

Original Application Filed June 30, 1909, Serial No. 505,149. Divided and This Application Filed March 26, 1910. Serial No. 551,638

To all whom it may concern:

Be it known that I, Louis Lumiere, a citizen of the Republic of France, residing at Lyons, in the Republic of France, have invented certain new and useful Improvements in Acoustical Instruments, of which the following is a full, clear, and complete disclosure.

This invention relates to improvements in acoustical instruments, such as telephones, microphones, sound recording and reproducing machines, and musical instruments in general, and the present application is a division of an application filed by me June 30, 1909, Serial Number 505,149.

As applied to sound recording and reproducing apparatus, my invention relates more particularly to that part of the instrument which is generally known as the diaphragm, or the body which in the process of sound recording is thrown into vibration by the sound waves, and the vibrations of which are traced and recorded by means of a stylus in the original record, while in the process of reproduction the diaphragm, (as a general rule, the diaphragm of a separate machine) is thrown into corresponding vibrations by a stylus to which it is attached, being made to follow the undulations in the record.

My invention also relates to the sound box in which said diaphragm is mounted.

The object of my invention is to provide a diaphragm and a mounting therefor, by means of which sounds may

be faithfully recorded and reproduced, which will be sensitive to sound waves and by the use of which the reproduction of sound will be improved and amplified.

Further objects of my invention are to increase the reproducing surface of a diaphragm, and, at the same time, to place the entire surface under a tension, (preferably torsional), to make it sensitive; to increase the active surface of a diaphragm of a certain given diameter; to increase the diameter of the diaphragm without making it liable to vibrate in parts, or to set up nodes or inactive portions in the diaphragm, or, in other words, to substantially increase the size of the diaphragm and, at the same time, have it vibrate throughout; to construct a diaphragm having a plurality of sound responsive elements, each of which is subjected to a molecular tension, and to subject each of a plurality of sound responsive elements to a molecular tension to increase the sensitiveness thereof and to cause them to vibrate as a whole.

Further objects of my invention will be found in the specification and claims below.

The invention consists in a diaphragm for acoustical instruments, having one or more freely resilient, sound responsive surfaces or elements, which have been brought into a condition of molecular stress, of an aggregate superficial area substantially larger than the surface of a plane disk of the same diameter, and in a recorder or reproducer in which said diaphragm is mounted.

It is found that the effect of bringing the surfaces of a vibrating body into a condition of molecular stress by torsion, is to reduce to a minimum the tendency of the vibrating body to form nodes during operation, so that the surface or surfaces of the diaphragm will vibrate as a whole and will not produce the disagreeable effect which is technically known as blasting or shattering.

One construction of diaphragm made according to this invention and the method of making it is illustrated in the accompanying drawings, in which:

Figure 1 shows a folded strip of material from which the improved diaphragm may be made; Fig. 2 is a plan view of a modified form of folded strip of material from which a diaphragm may be made; Fig. 3 is a plan view of the diaphragm; Fig. 4 is a sectional elevation of the dia-

phragm; Fig. 5 is a sectional elevational view of a slightly modified form of diaphragm; Fig. 6 is a diagram to illustrate the way in which the surfaces or elements of the diaphragm are twisted; Fig. 7 is an elevation of a sound reproducing machine fitted with the diaphragm made in accordance with this invention and illustrates a convenient method of carrying the diaphragm and connecting it to the stylus bar; and Fig. 7a is a sectional detail portion of Fig. 7. Fig. 8 is a plan view of the machine shown in Fig. 7; Fig. 9 is a side elevational view partly in section of a modified form of sound reproducing machine provided [fol. 277] with my invention. Fig. 10 is an enlarged view, partly in section, of the diaphragm and stylus bar mounting shown in Fig. 9; and Fig. 11 is a bottom plan view of the reproducer shown in Fig. 9.

According to one method of carrying out this invention, a diaphragm is constructed so that it represents the form shown in Figs. 1, 3 and 4 of the accompanying drawings, in which the whole surface of the diaphragm on either side consists of a plurality of elements reversely flexed to form a fan-like series of radially disposed ridges and furrows, the ridges on one side of the diaphragm corresponding to the furrows on the other side of the diaphragm, and the furrows gradually widening out and becoming less deep as they approach the edge of the diaphragm until at its perimeter the diaphragm lies in one plane. The elements forming the sides of the ridges and furrows provide the desired freely resilient sound responsive surfaces. A diaphragm of this form may be obtained by folding or plaiting a substantially rectangular strip of paper 1, or other suitable material in the manner shown in Fig. 1. The length of the strip of material before folding should be substantially the length of the circumference of the diaphragm to be formed therefrom, and the width of the strip should be substantially equal to the radius of the said diaphragm. When the strip has been plaited or folded in the manner above described and shown, the ends 2 and 3 should be brought together and secured to each other in any suitable manner. At this stage of the process or method, the strip will present, roughly speaking, the appearance of a cylinder having fluted sides. This strip of material is then pressed down and forced to assume the

form shown in Figs. 3 and 4, one edge of the strip being crimped together at the center, and the other edge forming the perimeter; the radical ridges and furrows, or plaits being closest together and of greatest depth at the center, and gradually opening out and flattening toward the edge where the diaphragm may be held in one plane between clamping rings, as shown in Figs. 7 to 11. In Fig. 3 the diaphragm is designated as 4 and the elements forming the plaits or ridges and furrows are designated by the numeral 5. The diaphragm 4 thus formed in the manner above described will be seen to have a surface formed wholly of a multiplicity of flexed sound responsive elements, reversely sloped or angled to each other, forming dihedral ridges. The surface of the diaphragm will consist of a surface comprising salient radial angled surfaces, and radial reëntrant angled surfaces. Any sector of the surface will have a fan-like formation. To the center of the diaphragm, is attached, in any suitable manner, the recording or reproducing stylus 6, as the case may be. As shown in Fig. 4, the diaphragm is for use with or for a record having an up and down, or vertical cut, since the diaphragm is directly provided with a stylus at its center. For making the attachment between the stylus and diaphragm, or between the connection between the stylus and the diaphragm, I prefer to bevel off the inner edge of the diaphragm as particularly shown in Figs. 2, 9 and 10. The stylus 6 may be secured directly to the inner edges of the elements of the diaphragm by being cemented or glued thereto in the manner shown in Fig. 4, or it may be secured in place by means of nuts 7 as will be more particularly described below, in connection with the form of apparatus shown in Figs. 5, 9 and 10. The stylus 6 may also be surrounded by rings of stiff paper 8, secured on either side of the diaphragm at the center thereof to give it additional rigidity at that point. I do not, however, limit myself to this form of connection. The effect of constructing the diaphragm in this manner, is that the whole diaphragm, i. e., the surface of each element of each ridge and furrow is under molecular stress, produced by torsion, but the sides of the ridges and furrows are twisted out of the plane in which they lie at the center of the diaphragm into a plane, practically at right angles thereto, at the circumference

of the diaphragm. I have further found that in a diaphragm produced by this means, the tendency of the vibrating body to form nodes during operation is reduced to a minimum. The surface of each of the elements composing this diaphragm being helicoidal, and since each point in the vibrating body, as it moves, follows a direction normal to the tangential plane at this point, the result is that the direction of movement is different for each point that has to be considered so that the formation of nodes is practically impossible. It is obvious, of course, that the same condition of molecular stress would be produced upon twisting a sheet of material which naturally possessed a helicoidal, or other than plane, form so as to take up a position in a true plane, or other helicoidal form of different pitch.

The diagram shown in Fig. 6, illustrates clearly the torsion which is applied to each of the multiple surfaces or elements of the diaphragm when the strip of material is made to take up the form shown in Figs. 3 and 4 from the form shown in Fig. 1. In this diagram 5′ represents a thin flat sheet of elastic material, such as is formed by each of the several folds or plaitings of the strip shown in Figs. 1 and 2. If the two ends of this sheet are turned in opposite directions, as indicated by the arrows, and is made to take up the position shown in dotted lines, it is found that a very resilient body is formed, which is capable [fol. 278] of vibrating more readily, and is more sensitive, i. e., more sound responsive in its new position than it was before. This is probably due to the molecular stress which is imparted to it by this twisting action.

It will be clear that each of the surfaces or folds 5, of the diaphragm illustrated in Figs. 3 and 4 is in the same condition of molecular stress, as the sheet 5′ in Fig. 6.

The width of the folds 5, relative to the breadth of the strip in which they are made, may vary; but I have found a convenient proportion to adopt when making the diaphragm of paper is about 10 to 1, so that each fold of the strip is 10 times as long as wide.

I have found that in a diaphragm having multiple resilient surfaces such as that above described, a greatly improved reproduction can be obtained. Moreover, a diaphragm constructed in the manner above described can be

usefully made of considerably greater diameter than has heretofore been possible. Experience has seemed to prove that a plane diaphragm of mica, or other material, such as is used at the present day, if made of more than about three-and-a-half inches in diameter, loses in quality of reproduction, the reproduction becoming less musical and there being a liability to what *there* is technically known as "shattering" due probably to the diaphragm not vibrating as a whole, i. e., to the setting up of nodes in the diaphragm. I have found, however, that I am able to make a diaphragm according to the present invention, as large as ten inches or more in diameter, without impairing the quality of the reproduction, and by means of this diaphragm, I at the same time, attain a much greater volume of sound than with the smaller diaphragm. This amplification of the sound, I believe to be due, not only to the increased diameter of the diaphragm, but also to the increased surface area of the diaphragm produced in the construction above described, by the plaitings or crimpings or folds in the material of the diaphragm; this appears to have the effect of putting into motion a greater volume of air and so increasing the volume of sound.

A diaphragm having freely resilient sound responsive surfaces brought into a condition of molecular stress, preferably by torsion, and also of an aggregate area substantially larger than a plane disk of the same diameter may of course be produced in other ways than that above described. I have found, however, that the above described method is a convenient one for making the diaphragm.

The advantage arising from the use of a diaphragm constructed as above described, is that the volume of sound produced is sufficient to enable me to dispense with the usual amplifying horn, and in this way, much of the metallic and hollow character usually associated with talking machine reproductions is eliminated.

Diaphragms may be made according to this invention, of any suitable elastic material, such as paper, (which may be varnished if desired), card, celluloid, metal, or the like, and the surface, or surfaces, of the diaphragm, or elements composing the vibrating body, may be put under tension by any suitable means.

One means of mounting the stylus bar and diaphragm in an operative position particularly for use with a record having a record of sound in the form of a groove having lateral undulations in the walls thereof is shown in Figs. 7 and 8. In this case, the diaphragm 4 is held at the edges by clamping rings 9 and 10, and, to the front ring 9, may be secured a small trumpet 11 for directing the sound waves. The clamping ring 10 is fixed to a suitable backing ring 12, having radial arms 13 by which the same is carried by a tube 14 which is capable of turning freely in the bearings 15—15, of the swinging arm 16, pivoted at 17 upon a rigid bracket 18, fixed to the cabinet 19. The cabinet 19 is provided with a suitable mechanism for rotating the turntable 20 upon which a record 21 is carried in the usual manner. The tube 14 is provided at one end with a mounting 22 freely rotatable upon said tube 14, but prevented in any suitable manner, from longitudinal movement upon the tube 14. This mounting 22 carries a stylus bar 23 which may be mounted thereon in any suitable manner, as by being pivoted on the knife edges 24, and retained on said knife edge bearings by a spring 25, in the usual manner. The upper end of the stylus bar 23 is connected by a rod 26 with the diaphragm 5, the rod 26 being connected or attached to the diaphragm by nuts 7 in the manner shown in Fig. 5. In this construction as shown in Figs. 7 and 8, the diaphragm is preferably made from a sheet of material such as is shown in Fig. 2 of the drawings so as to provide a suitable recess on each side of the diaphragm, in which the nuts 7 are seated. These nuts may be further cemented or otherwise secured to the diaphragm. In the said figures the diaphragm is also shown as being provided with a stiffening ring 8 at the center of the diaphragm and surrounding the stylus bar connection 26. Suitable nuts or collars 27 may be employed for holding the tube 14 from lengthwise movement in the bearings 15.

As the stylus 28 follows the record groove, the arm 16 will swing across the record on the pivot 17, and the mounting 22 carrying the stylus bar 23, will oscillate around the [fol. 279] tube 14 with any unevenness in the rotation of the record. A suitable weight 29 may be attached to the

mounting 22, to cause the stylus to engage the record with the requisite amount of pressure.

In Figs. 9, 10 and 11, I have illustrated a further modification of the way in which my diaphragm may be used in connection with a sound reproducing machine. In said figures, the record 21 is supported upon and rotated by a turn-table 20 driven by any suitable motor within the casing 19, and the cabinet is provided with a bracket 18 similar to the arrangement above described in connection with Figs. 7 and 8. An arm 30 is mounted upon a stem or pintle 31 to swing on said bracket in a plane substantially parallel with the plane of the record 21. The bracket 18 may be provided with a vertically adjustable stop 32 for the end of the stem 31, which, in the form illustrated in Fig. 9, consists of a screw threaded into the bracket 18, and against which the end of the stem or pintle 31 rests. By this means, the arm 30 may be raised or lowered to adjust the parts carried thereby with respect to the record 21 on the turn-table 20, to set the stylus at the proper angle to the record surface. The free end of the arm 30 carries a yoke 33 pivoted to the said arm by a bolt or pin 34, so as to be capable of swinging in a plane substantially perpendicular to the plane of the record. The said arm 30 is provided with a stop 35, which prevents the yoke from swinging downwardly beyond a predetermined point. The outer ends of the yoke 33 are secured to lugs 36 bolted to the rings 37, 38, by bolts 39, passing through said rings and said lug. Screws 40, passing through the ends of the yoke 33 and into the lugs 36, form the pivots to permit the rings and the parts carried thereby, to oscillate thereon. The diaphragm 41 is of the kind which I have described above; that is to say, the diaphragm is formed by reversely folding a sheet of material to form plaits, each plait forming an element of the diaphragm, and each of these plaits or elements is subjected to a torsional tension or strain by the bringing of the folded or plaited sheet of material into a substantially circular form. In these Figs. 9 to 11, the diaphragm is shown practically as being formed from a sheet of material such as is shown in Fig. 2; that is to say, a strip in which each plait is cut away at its inner corners so as to form a recess on each side of the center of the diaphragm to permit of a convenient attachment of the stylus bar to the diaphragm.

As is plainly shown in Fig. 10, the diaphragm 41 is clamped between the rings 37 and 38, and securely held in that position by means of the screws 42 passing through the said rings and drawing them together. I prefer, however, to interpose, between the rings 37 and 38, and the diaphragm, thin rings 43—43 of a suitable non-metallic and preferably slightly elastic material, one on each side of the diaphragm. These rings 43, may be of fabric, or rubber, or fiber, or any other suitable material to prevent an actual contact between the diaphragm and the metallic rings 37 and 38, and to securely hold the periphery of the diaphragm in a single plane. A suitable small trumpet 11, may be also secured between the rings for the purpose of directing the sound waves. I have shown it plainly in Figs. 9 and 10 as composed of a slightly flaring substantially conical member having a flange 11′ clamped between the rings 37 and 38, the screws 42 passing therethrough. The periphery of the diaphragm 41 is clamped between the intermediate rings 43, and held thereby in a single plane as plainly shown in Fig. 10.

The bottom of the reproducer is provided with a suitable support for the stylus bar, said support comprising a bar 44 secured to the ring 38 by screws 45, or in any other suitable manner. The said bar 44 may carry a block 46 rigidly secured thereto and upon the lower side of said block, I mount the stylus bar. Any suitable mounting for the stylus bar may be employed, but in the said modification illustrated in Figs. 9 to 11, I have shown the block 46 as provided with a pair of alined knife edges 47 engaging suitable recesses and lateral extensions 48 of the stylus bar 49. Each lateral extension is provided with a spring 50, one end of which is attached to said extension 48, and the other end of which extends outwardly and is provided with a hole through which a screw 51 passes, the head of the screw engaging the end of said spring 50 and the screw being threaded in a suitably tapped plate 52 carried by the said block 46. In this way the stylus bar is yieldingly held upon the knife edges 47, but is free to oscillate upon them as bearings.

The lower end of the stylus bar is provided with a suitable set screw 53 for securing the stylus 54 in the socket therein. The stylus bar 49 may have a portion 49′ extend-

ing at an angle to the stylus carrying portion and it may then extend upwardly as at 55 to the point of attachment to the center of the diaphragm. I have shown the said upwardly extending portion 55 as being curved in order to make it slightly yielding, and the point between the portions 49′ and 55 as being materially weakened to enable the stylus bar to readily bend or spring or give slightly at this point to transform the vibratory movement of the stylus into a reciprocatory movement of the portion 55 which is directly attached to and consequently communicates its motion to the center of the diaphragm.

In adjusting the reproducer to the recorded surface, the [fol. 280] arm 30 should be set at such a height that the stylus will be given a slight rake to the recorded surface, as plainly shown in Fig. 9. This will permit the record to slide freely beneath the stylus without unduly scratching the same and cause the stylus to engage the record with a sufficient pressure to insure the tracking of the stylus in the record groove. The record may then slide freely beneath the stylus, and the whole reproducer may swing slightly on the bolts or pins 40 to allow for any irregularity or unevenness or warp in the recorded surface.

In order that the stylus may not bear too heavily upon the record, the trumpet 11 may be provided with a suitable counterbalance-weight 59.

From the preceding description it will be plain that the whole construction is such that the trumpet, diaphragm, rings and stylus attached thereto may be swung upwardly about the bolts or pin 34 as a pivot for the purpose of replacing the stylus or for throwing the whole device into an inoperative position, as indicated in dotted lines in Fig. 9.

In operation it will be apparent that when the record is given a rotary movement from the turn-table 20 and the stylus 54 engages the record 21, the whole reproducer will swing about the stem or pintle 31 as a pivot allowing the needle or stylus 54 to track across the record and the stylus will be caused to assume the correct angle to the recorded surface by the adjustment of the step 32 against which the stem or pintle 31 abuts, and further, that the stylus will be prevented from bearing too heavily upon the record by the counter-weight 59 attached to the upper end of the trumpet 11.

In all the forms which I have above described, it will be seen that the diaphragm is constructed upon the same principle, and that it is mounted in substantially the same way, and that any suitable manner of securing the stylus to the center of the diaphragm may be employed, and while I have shown a small trumpet 11 in connection with the constructions which I have illustrated, it is to be understood that the trumpet may be entirely dispensed with if desired, the function being to give direction to the sound waves rather than to increase the volume of the sound reproduced by the diaphragm.

Having thus described my invention, what I claim and desire to protect by Letters Patent of the United States, is:—

1. A phonic diaphragm having a plurality of reversely flexed sound-responsive elements, each of said elements being held distorted from a normal shape under a torsional stress and tending to return to said normal shape.

2. In a sound box, the combination of a diaphragm composed of a plurality of radial sound-responsive elements, tending to assume a position coincident with a plane surface, and means to hold said elements in a flexed position.

3. A phonic diaphragm having a plurality of radial flexed sound-responsive elements, each element held under a torsional stress due to its flexed condition and tending to return to an unflexed condition.

4. A phonic diaphragm, having its entire surface composed of adjacent like elements arranged to form both salient and reëntrant angles, said angles forming alternate radial ridges and grooves, each of said elements being held distorted from a normal condition by a torsional stress and tending to return to said normal condition.

5. In a sound box, the combination of a diaphragm, having a plurality of radial sound-responsive elements tending to assume a position coincident with a plane surface, and means to hold said elements in a flexed position, with the outer ends of said flexed elements in a single plane.

6. A phonic diaphragm, having a plurality of sound-responsive elements, the angle between adjacent pairs of which progressively varies.

7. A phonic diaphragm including a plurality of like elements, each element being arranged between and inclined with respect to adjacent elements, each element being held

under a torsional stress, and said elements tending to assume positions coincident with a common plane.

8. A phonic diaphragm, comprising a plurality of helical sound-responsive elements, which tend to form a common plane surface.

9. A phonic diaphragm, having a plurality of torsioned elements radially disposed, said elements tending to assume positions coincident with a common plane.

10. A circular phonic diaphragm, having a plurality of elements, the slope of which transverse to the radius varies continuously from a maximum at the center of the diaphragm to a minimum at the periphery.

11. A phonic diaphragm, having a plurality of elements of transverse slope, varying progressively along a radius.

12. A phonic diaphragm, having a plurality of like torsioned elements which tend to return to a normal configuration.

13. A phonic diaphragm, formed of a plurality of sound-responsive elements, each of which is distorted under tension intermediate of its peripheral portions by the relationship of adjacent elements, and positive means for restraining the peripheral portions, said elements tending to return to a normal configuration.

14. In a sound recording or reproducing machine, a diaphragm composed of a plurality of elements, each of which [fol. 281] is normally subjected to torsional stress while in inoperative position, a stylus operatively connected to said diaphragm, and means to hold the edges of said diaphragm in substantially a single plane.

15. In a sound recorder or reproducer, a diaphragm composed of a plurality of elements, each of which is subjected to a torsional stress, the inner edge of each element being substantially parallel to the axis of the diaphragm.

16. In a sound recorder or reproducer, a diaphragm composed of a plurality of elements, each of which is subjected to a torsional stress, the inner edge of each element being substantially parallel to the axis of the diaphragm, and the corners of each element at the center of the diaphragm being beveled to form a recess at the center of the diaphragm.

17. In a sound recorder or reproducer, a diaphragm composed of a plurality of elements radially arranged, the inner edge of each element being substantially parallel to

the axis of the diaphragm, and the outer edge of each element being substantially in a plane normal to the axis of said diaphragm.

18. In a sound recorder or reproducer, a diaphragm composed of a plurality of elements, the inner edge of each element being substantially parallel to the axis of the diaphragm, and means to hold the outer edge of each element in a single plane.

19. In a sound recorder or reproducer, a diaphragm composed of a plurality of helical elements radiating from the center of the diaphragm, and a stiffening ring secured to the outside edges of said elements.

20. In a sound recorder or reproducer, a diaphragm composed of a plurality of elements, each of which is distorted by a torsional stress and tends to return to a normal configuration, and clamping rings on each side of the peripheral edge of the diaphragm holding said edge in a single plane.

21. A phonic diaphragm comprising a body portion of substantially uniform thickness of material and arranged substantially in the form of a double cone.

22. A phonic diaphragm, comprising a body portion consisting of a single thickness of material and arranged substantially in the form of a double cone, having a substantially flat flexible rim and oppositely disposed radial plaits, tapering outwardly in depth from the center of said body portion.

23. A phonic diaphragm comprising a body portion consisting of a single thickness of material, having a substantially circular rim arranged in a single plane, said body portion being provided with radial plaits tapering outwardly in depth from the central portion of the diaphragm, said plaits having their alternate angles upon opposite sides of said plane and arranged in substantially balanced or symmetrical relationship thereto.

24. The combination with a phonic diaphragm of means normally holding said diaphragm, when in inoperative position, under a torsional stress.

25. A phonic diaphragm having a portion normally held, when in inoperative position, under a torsional stress and tending to return to its original state.

26. In a sound box, the combination with an annular support, of a diaphragm carried thereby, a bar secured to opposite portions of said support, a block rigidly secured to said bar, a stylus bar phonetically connected to said diaphragm and provided with oppositely disposed lateral extensions, alined knife edges between said extensions and said block and yielding means for holding said bar in position with respect to said block.

27. In a sound box, the combination with an annular support, of a diaphragm carried thereby, a bar secured to opposite portions of said support, a block rigidly secured to said bar, a stylus bar phonetically connected to said diaphragm and provided with oppositely disposed lateral extensions, alined knife edges between said extensions and said block, and yielding means for holding said bar in position with respect to said block, said yielding means comprising a spring between each of said extensions and said block.

28. In a sound box, the combination with a diaphragm, of a stylus bar comprising an inner portion phonetically connected to said diaphragm, and a comparatively rigid outer portion mounted to oscillate about a fixed axis and forming a continuation of, and extending substantially at a right angle with, said inner portion, said bar having a flexible reduced portion connecting and forming a hinge between said inner and outer portions at the vertex of said angle, and the oscillation of said outer portion producing a longitudinal reciprocation of said inner portion, said flexible portions being connected only to said inner and outer portions.

29. In a sound box, the combination with a diaphragm, of a stylus bar comprising an inner portion phonetically connected to said diaphragm, and a comparatively rigid outer portion mounted to oscillate about a fixed axis and forming a continuation of, and extending substantially at a right angle to, said inner portion, said bar having a flexible reduced portion connecting and forming a hinge between said inner and outer portions at the vertex of said angle, and the oscillation of said outer portion producing a longitudinal reciprocation of said inner portion, and said inner portion being partly in the form of a yielding loop to permit the effective length of said inner portion to be varied

[fol. 282] slightly by the oscillation of said outer portion, said flexible portions being connected only to said inner and outer portions.

30. In a sound box, the combination with a support, of a diaphragm carried thereby, and a stylus bar, said stylus bar including a comparatively rigid portion mounted to oscillate on said support, and a connecting portion between said first mentioned portion and said diaphragm, said portions being joined by a flexible reduced portion forming a hinge between and connected only to said first mentioned portions and the oscillation of said first mentioned portion resulting in the longitudinal reciprocation of said connecting portion.

31. A phonic diaphragm having a portion normally distorted under a twisting stress while in an inoperative position, and tending to return to its original form.

In witness whereof I have hereunto set my hand this 11th day of March, A. D. 1910.

Louis Lumiere.

Witnesses: Paul H. Cram, Septimus Bracher.

(Here follows drawing, side folio 283)

[fol. 284] United States Patent Office

John C. English, of Camden, New Jersey, Assignor to Victor Talking Machine Company, a Corporation of New Jersey

Sound-Box for Talking-Machines

Specification of Letters Patent

1,064,062. Patented June 10, 1913

Application filed October 31, 1910. Serial No. 589,845

To all whom it may concern:

Be it known that I, John C. English, a citizen of the United States, and a resident of the city of Camden, county of Camden, and State of New Jersey, have invented certain

J. C. ENGLISH.

SOUND BOX FOR TALKING MACHINES.

APPLICATION FILED OCT. 31, 1910.

1,064,062. Patented June 10, 1913.

Fig. 1.

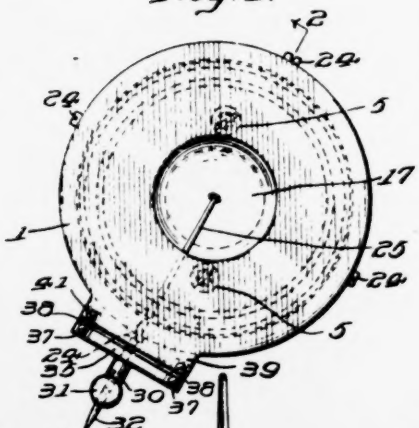

Fig. 2.

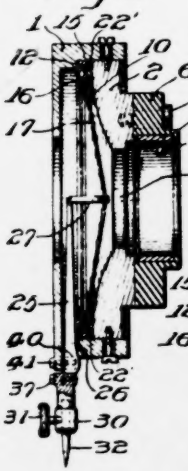

Fig. 4.

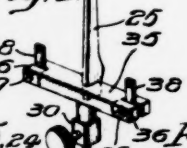

Fig. 3.

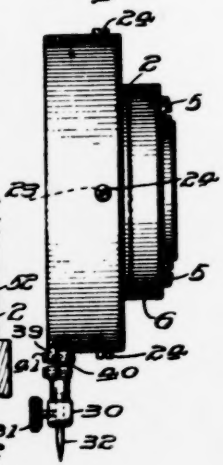

Fig. 5.

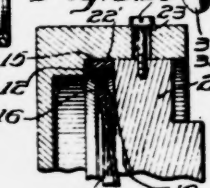

Fig. 6.

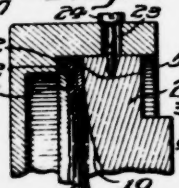

Fig. 7.

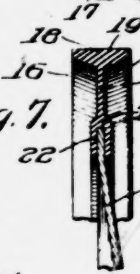

Fig. 8.

WITNESSES

Th. J. Hartmann

A. L. Gardner

INVENTOR

John C. English.

BY

Munn & Co.

ATTORNEY

new and useful Improvements in Sound-Boxes for Talking-Machines, of which the following is a full, clear, and exact disclosure.

The main objects of this invention are, to provide an improved sound box of simple, compact and durable construction that will record and reproduce sounds with great accuracy and efficiency; to provide in a sound box, an improved casing, an improved diaphragm, and an improved stylus bar and mounting therefor; and to provide other improvements as will appear hereinafter.

It has been contended that in sound boxes in which a thin flexible diaphragm is used and in which the sound vibrations are produced or recorded by flexing the diaphragm, the diaphragm acts like a reed and responds sympathetically to certain tones in a manner that produces undesirable results. It has also been contended that such a diaphragm is comparatively difficult to vibrate and does not act with sufficient sensitiveness to produce or to record delicate over-tones. In this invention these defects which it has been contended are incident to the recording or reproduction of sound by the flexing of a diaphragm, are obviated by utilizing instead of a flexible diaphragm a light substantially inflexible diaphragm and an improved mounting therefor whereby the diaphragm is permitted to vibrate as a whole without being flexed.

In the accompanying drawings, Figure 1 is a front elevation of a sound box constructed in accordance with this invention; Fig. 2 a transverse section on the line 2—2 of Fig. 1; Fig. 3 a side elevation of the same; Fig. 4 a perspective of a detail of the same; Fig. 5 a fragmentary enlargement of a portion of Fig. 2; Fig. 6 a view similar to Fig. 5 but showing a modified form of this invention; Fig. 7 an enlarged fragmentary diametrical section of the diaphragm and mounting or supporting ring shown in Figs. 1, 2 and 5 as they appear before being placed in position in the sound box; and Fig. 8 is a view similar to Fig. 7, showing in a similar way the diaphragm and modified form of mounting therefor which are shown in operative position in Fig. 6.

Referring to the drawings, one embodiment of this invention comprises a cylindrical sound box casing or support composed of two main portions,—a cylindrical cup

shaped front plate 1 and a back plate 2 telescoping into the front plate and provided with a circular central aperture 3 for the passage of sound waves.

Secured to the rear face of the back plate 2, coaxial therewith, by means of screw 5, is a yielding tubular extension 6 provided with a non-yielding lining 7 and an inwardly projecting stop 8, whereby the sound box may be telescoped over the usual tubular tone-arm or sound conveyor (not shown).

The inner surface 10 of the back plate 2 is preferably convexly curved flaring inwardly from the central aperture 3 to the outer periphery of the plate. The inner surface of the front plate 1 of the casing is preferably in the form of a stepped cylinder, providing an annular shoulder 12 facing rearwardly and spaced from the opposite inner surface of the back plate 2, forming therewith an annular recess 15 in which snugly fits a yielding gasket or mounting 16, in which is supported a diaphragm 17.

The gasket 16 is continuous or closed in structure, is preferably made of rubber or other suitable solid resilient or yielding material, and is preferably substantially T-shaped in cross section, comprising a base 18 substantially equal in width to the width of the recess 15, and having a cylindrical outer surface 19 slightly greater in diameter than the cylindrical inner surface of the recess 15. The inner surface of the base 18 is preferably convex in cross section and in the form of two oppositely disposed inwardly converging conical surfaces 20, which meet in a centrally arranged normally flat annular web 21 which forms a reduced intermediate portion of the gasket. This web 21 is integral with the base 18 and extremely thin and flexible. The inner portion of the web 21 terminates in an annular binder or holder integral with and thicker than the web [fol. 285] and is provided upon its inner edge with a centrally arranged annular cylindrical grooved recess 22, in which snugly fits the marginal portion of the diaphragm 17. The gasket may be held in position by means of wax 22′ or other similar material applied between the base of the gasket and the inner cylindrical surface of the front plate 1.

The diaphragm 17 is preferably made of paper or any other light material, and when made of paper or other

similar porous material may be impregnated with resin or any other substance or composition to make the diaphragm moisture-proof. The diaphragm is of substantially uniform thickness throughout its entire extent, and with the exception of its marginal portion, is preferably dished or conical in shape, converging rearwardly axially with the sound box casing. The marginal portion of the diaphragm is preferably in the form of a flat annulus, arranged in a plane perpendicular to the longitudinal axis of the sound box.

As the diameter of the gasket 16 is silghtly larger than the internal diameter of the recess 15, in which it is held, the gasket will be held under a state of compression when the diaphragm and gasket are in operative position in the casing, and the thin portion of the web 21 will be slightly distorted laterally, as shown in Fig 2 and enlarged in Fig. 5, from its normally flat condition. The diaphragm is thus held when in operative position under a slight tension or compression against the periphery 17' thereof by the gasket acting radially against the peripheral edge of the diaphragm and it may here be stated that so far as this application is concerned the expressions "periphery" or "peripheral portion" or "peripheral edge" refer to the outer edge of the diaphragm, that is to say, that portion of the diaphragm between the plane surfaces of the opposite sides of the marginal portion of the diaphragm.

To hold the back plate 2 in position and to permit of the adjustment of the back plate toward and away from the gasket 16, a series of oblong apertures 23 are provided through the cylindrical rim of the front plate, and a headed screw 24 extends loosely through each of these apertures and is threaded into the back plate. By this construction the pressing of the back upon the base of the gasket may be varied to increase or diminish the pressure of the gasket against the peripheral edge of the diaphragm.

For communicating vibrations corresponding to sound waves to or from the diaphragm, a stylus bar 25 is mounted to oscilate upon the front plate of the sound box casing, one end of the bar being within the casing axially in front of the diaphragm, and the bar extending radially outwardly through an aperture 26 provided therefor in the casing. The inner end of the stylus bar is pivotally connected to

the outer end of a light but rigid connecting rod 27, the inner end of which is phonetically connected in any suitable manner to the central portion of the diaphragm, the outer end of the connecting rod being perferably bifurcated to receive the inner end of the stylus bar. The outer end of the stylus bar projects outwardly from the sound box casing and is provided with the usual stylus socket 30 and set screw 31 for holding a stylus 32 in place.

For supporting the stylus bar to oscilate upon a substantially fixed axis with respect to the sound box casing, the bar is provided outside of the casing with a cross-piece 35, rigid therewith, and projecting in opposite directions therefrom. Each end of this cross-piece 35 is recessed to receive a clamping plate 36, which is adjustably connected to the cross-piece by means of a headed screw 37, which extends loosely through the clamping plate and on aperture in one end of a flexible connector 38 and is threaded into the cross-piece 35.

Each of the two flexible connectors, or spaced yielding supports 38 is preferably made of thin tempered steel, but may be made of copper, fabric or other non-resilient material. Each connector 38 extends inwardly from the cross-piece 35, being clamped rigidly at its outer end between the cross-piece 35 and the clamping plates 36 by means of the screw 37. The inner end of each flexible connector 38 is similarly clamped against the rear surface of an extension 39, integral or rigid with the front portion of the sound box casing, by means of a clamping plate 40 and a screw 41. The flexible connectors 38 are thus arranged parallel to each other and in a plane substantially perpendicular to the longitudinal axis of the sound box casing.

The space between the extension 39 of the casing and the cross-piece 35 of the stylus bar is preferably only sufficient to permit of the necessary oscillation of the bar, and the bar is thus restrained to swing upon a substantially fixed axis, perpendicular to the bar and parallel to the plane of the marginal portion of the diaphragm.

In the modified form of this invention shown in Figs. 6 and 8, the sound box casing and the diaphragm 17 are constructed as hereinbefore described and the gasket 51 is substantially identically with the gasket 16, hereinbefore described except that the marginal portion or base of this

gasket is bifurcated and in the form of two outwardly diverging portions 52. The outer diameter of the bifurcated base of this gasket is normally substantially the same as [fol. 286] the inner diameter of the annular groove 15 in which it rests.

When the gasket 51 in its operative position the free edges of the two portions 52 of the base of the gasket are clamped toward each other between the shoulder 12 of the front plate 1 and the inner surface of the back plate 2, so as to compress the gasket radially against the peripheral edge of the diaphragm 17. The thin web-like portion of the gasket is slightly distorted laterally from its normally flat plane by this compression.

The stylus bar and its mounting and other features of this modified construction may be the same as shown and hereinbefore described.

In the operation of this device, owing to the extreme thinness and flexible nature of the web forming the intermediate portion of the gasket, and to the extreme lightness and comparatively inflexible nature of the diaphragm, the diaphragm is extremely sensitive to respond to the vibration of the stylus bar in reproducing sound or to respond to the action of the sound waves in recording sound and in either case therefore the diaphragm vibrates as a whole without any appreciable flexing and there is very little, if any, appreciable loss of efficiency due to the diaphragm or its mounting.

It is evident that in applying this invention various changes might be made in the constructions without departing from the spirit of this invention or the scope of the appended claims.

Having thus described this invention, I claim and desire to protect by Letters Patent of the United States:

1. In a sound box, the combination with a substantially inflexible conical diaphragm, of a yielding gasket supporting said diaphragm, said gasket being held under an initial pressure forcing said gasket against the peripheral edge of said diaphragm.

2. In a sound box, the combination with a circular diaphragm, of a yielding gasket supporting the same, said gasket comprising an annular base portion greater in internal diameter than the diameter of said diaphragm and

surrounding said diaphragm in the plane of the marginal edge thereof, and comprising a relatively thin annular portion between said base portion and said diaphragm.

3. A gasket for a sound box comprising an annular base portion, and a relatively thin normally flat annular portion carried by said base portion and projecting toward the center of said base portion from the internal surface of said base portion.

4. A yielding gasket for a sound box, comprising a base portion, a relatively thin portion inclosed by and projecting inwardly from said base portion, and a holder extending inwardly from said relatively thin portion, and adapted to support the marginal portion of a diaphragm.

5. An annular yielding gasket for a sound box, comprising a base portion, a relatively thin portion projecting inwardly from said base portion, and a grooved holder extending inwardly from said relatively thin portion, and adapted to support the marginal portion of a diaphragm.

6. In a sound box, the combination with a diaphragm, of yielding means engaging the peripheral edge of said diaphragm, and adjustable means for compressing said yielding means to apply a yielding pressure upon said peripheral edge radially with respect to said diaphragm.

7. In a sound box, the combination with a yielding support, of a diaphragm having its marginal edge surrounded and engaged by said support, the diaphragm being of a size to place the yielding support under initial compression, and adjustable means acting on the yielding support to modify the state of compression of said support.

8. In a sound box, the combination with a diaphragm having a cupped central portion and a substantially flat rim, of yielding gasket engaging said rim and held under an initial pressure, forcing said gasket radially against the peripheral edge of said rim.

9. In a sound box, the combination with a diaphragm, of a yielding gasket supporting said diaphragm, and bearing against the marginal edge thereof, said gasket comprising a yielding base portion having an internal diameter greater than the external diameter of said diaphragm and arranged in the plane of the marginal edge of said diaphragm, and comprising a relatively thin yielding portion between said base portion and said diaphragm.

10. An annular yielding gasket for a sound box, said gasket comprising a yielding annular base portion, and a yielding annular portion thinner than and inclosed by said base portion, integral therewith and projecting inwardly from the internal surface of said base portion.

11. An annular yielding gasket for a sound box, comprising a yielding annular base portion, a normally flat annular web thinner than said base portion and integral with and projecting inwardly therefrom and an internally grooved holder projecting inwardly from said web and integral therewith.

12. In a sound box, the combination with a diaphragm of a gasket surrounding said diaphragm and supporting the same, said gasket comprising a holder embracing the [fol. 287] opposite sides of the margin of said diaphragm, having a relatively thin web-like yielding portion integral with said holder and surrounding the same.

13. In a sound box, the combination with a diaphragm of a gasket surrounding said diaphragm and supporting the same, said gasket comprising a holder embracing the opposite sides of the margin of said diaphragm, having a relatively thin web-like yielding portion integral with said holder and surrounding the same, said gasket being in contact with the marginal edge of said diaphragm.

14. In a sound box, the combination with a diaphragm vibratory as a whole without flexing, and in a direction transverse to its own plane of a yielding gasket surrounding and supporting said diaphragm, said gasket being free to flex, and being held under an initial state of compression by said diaphragm.

15. In a sound box, the combination with a diaphragm vibratory as a whole, without flexing, and in a direction transverse to its own plane, of a yielding gasket surrounding and supporting said diaphragm, said gasket being free to flex, and being held under an initial state of compression by said diaphragm, said gasket reacting to compress said diaphragm radially.

16. In a sound box, the combination with a dished diaphragm of substantially uniform thickness throughout its full extent, of a yielding gasket surrounding and support-

ing said diaphragm, said gasket being free to flex and being held in an initial state of compression by said diaphragm.

17. In a sound box, the combination with a diaphragm of a yielding gasket free to flex and supporting said diaphragm in an initial state of compression, said diaphragm reacting to hold said gasket under an initial state of compression.

18. In a sound box, the combination with a diaphragm vibratory as a whole without flexing, and in a direction transverse to its own plane, of a yielding gasket supporting said diaphragm and holding the same in an initial state of compression, said diaphragm reacting to hold said gasket in an initial state of compression.

19. In a sound box, the combination with a diaphragm vibratory as a whole without flexing and in a direction transverse to its own plane, of a yielding gasket entirely supporting said diaphragm and holding the same in an initial state of compression, said diaphragm reacting to hold said gasket in an initial state of compression.

20. In a sound box, the combination with a substantially inflexible diaphragm vibratory as a whole in a direction transverse to its own plane, of a yielding gasket inclosing said diaphragm and contacting with the peripheral edge thereof and holding said diaphragm in an initial state of compression, said diaphragm reacting through its marginal edge to hold said gasket in an initial state of compression.

21. A gasket for a sound box, comprising a continuous base portion, and a relatively thin web portion carried and surrounded by said base portion.

22. A gasket for a sound box, comprising a continuous base portion and a relatively thin web portion carried by said base portion and projecting into the space inclosed by said base portion.

23. A gasket for a sound box, comprising a continuous yielding base portion, and a relatively thin yielding web portion surrounded and carried by said base portion.

24. A gasket for a sound box, comprising a continuous yielding base portion, and a relatively thin yielding web portion surrounded and carried by said base portion and wholly included in the space surrounded by said base portion.

S. G. BROWN.
TELEPHONE RECEIVER.
APPLICATION FILED MAR. 27, 1911.

1,096,676. Patented May 12, 1914

Fig. 1.

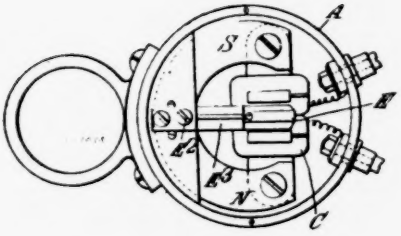

Fig. 2.

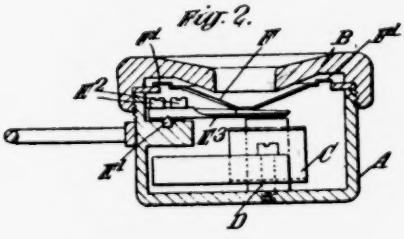

Fig. 3.

Witnesses:

[signature]

[signature] Kesler

Inventor
Sidney G. Brown
by [signature]
Atty

25. In a sound box, the combination with a diaphragm, of yielding means engaging the peripheral edge of the diaphragm and confined peripherally, and adjustable means for compressing said yielding means laterally to apply yielding pressure on the diaphragm in the plane of said edge.

26. A gasket for a sound box comprising a base portion, and a relatively thin flat web portion carried by said base portion and projecting inwardly from the internal surface of said base portion.

27. In a sound box, the combination with a diaphragm, of a yielding support engaging the peripheral edge of the diaphragm, and adjustable means acting on said yielding support to cause the same to apply different yielding pressures on the peripheral edge of the diaphragm in a plane substantially normal to the axis of the diaphragm.

28. In a sound box, the combination with a diaphragm, of yielding means engaging the peripheral edge of the diaphragm, and adjustable means acting on said yielding means to produce varying pressures of said yielding means on the diaphragm, said yielding means exerting a pressure on the peripheral edge of said diaphragm independently of said adjustable means.

29. In a sound box, the combination of a substantially inflexible diaphragm, a flexible web member supporting said diaphragm by engagement with the peripheral portion thereof, and means for causing stress in said flexible member to act on the periphery of said diaphragm solely in a plane substantially normal to the axis of said diaphragm.

30. In a sound box, the combination of a substantially inflexible diaphragm, a yielding member surrounding and [fol. 288] supporting said diaphragm, and means acting on said yielding member to vary the stress of said yielding member with respect to said diaphragm, said yielding member exerting a pressure on the peripheral edge of said diaphragm independently of said adjustable means.

In witness whereof, I have hereunto set my hand this 27th day of October, A. D. 1910.

John C. English.

Witnesses: Charles C. More, Frank B. Middleton, Jr.

(Here follows drawing, side folio 289.)

[fol. 290] United States Patent Office

Sidney George Brown, of London, England

Telephone-Receiver

Specification of Letters Patent

1,096,676. Patented May 12, 1914

Application filed March 27, 1911. Serial No. 617,228

To all whom it may concern:

Be it known that I, Sidney George Brown, a subject of the King of Great Britain, residing at 4 Great Winchester street, in the city and county of London, England, have invented certain new and useful Improvements Relating to Telephone-Receivers, of which the following is a specification.

This invention relates to the reproduction of sound by electrical means and has particular reference to telephone receivers, the chief object being to enable a high efficiency of conversion of oscillations or variations of electric current into acoustic vibrations to be obtained.

The usual telephone receiver consists of a polarized electromagnet through the coil of which the line currents pass, and a soft iron diaphragm gripped peripherally and thereby held a short distance away from the electromagnet. Variation in the strength of the line current cause the diaphragm to vibrate, and, in so doing, to set the surrounding air into vibration. The responsiveness of the diaphragm as usually employed and the transmission of its vibrations to the air are imperfect for several reasons. In the first place owing to the peripheral gripping of the diaphragm it cannot vibrate uniformly at all points on its surface; also owing to the diaphragm serving to complete the magnetic circuit of the electromagnet, its thickness is considerable; and, owing to this thickness of the diaphragm and to its being composed of iron, it is comparatively heavy with the result that its inertia makes it sluggish in action. Moreover in regard to the transmission of the vibrations through the air, sufficient attention has not been paid to the volume of air set in motion and the variations of air pressure for producing the

most effective transmission. The dimensions of the ear-drum and of the aural cavity may be taken as invariable factors in such considerations. Now these factors being known, there are certain relations existing between them and the size of the diaphragm, the nature of the air pressure variations, and the volume of air set in motion for the most effective reproduction of the sounds, and the transmission of them to the ear-drum.

The telephone receiver constructed in accordance with the present invention is designed to eliminate the causes of inefficiency above referred to.

According to this invention the diaphragm of the receiver is made extremely light but is so shaped that notwithstanding its extreme lightness it is comparatively rigid. I have found that a diaphragm of aluminum formed conically from a very thin disk of that metal and if necessary suitably stiffened by ribs, or corrugations, or otherwise, possesses the requisite properties to a satisfactory degree. The thin disk of aluminum may conveniently be spun into a conical shape with a flat center piece.

It is advantageous for the strength to be greatest at the center and progressively less toward the edge, and by starting the spinning operation at the edge and working toward the center, this property of the spun disk will be naturally produced owing to the graduated thickness of the disk. To increase this effect resort may be made to the known expedient of assembling several disks of different diameter into a pile. The thickness of such disks may be of the order of $2\frac{1}{2}$ thousandths of an inch. Some idea as to the lightness of a diaphragm so formed may be gained from the fact that when it is allowed to drop to the ground it does not fall like a heavy mass of metal, but moves gently through the air. The mere conical shape of the diaphragm will insure a considerable amount of rigidity but this may be increased by providing radial ribs or corrugations on it. This diaphragm is mounted upon a resilient member which responds to the variations of line current; the said resilient member may consist of a metal strip or reed containing within itself, by reason of a cut-away portion, its own control and that of the diaphragm. The diaphragm is preferably attached at its center to a point on the metal strip or reed slightly eccentric with respect to the axis of the coil

through which the line currents pass. The diaphragm is so arranged as to be free to move as a whole, that is to say all points on its surface vibrate equally, and to insure this action the periphery of the diaphragm is either quite free or is attached to the usual casing by a mere thin ring of flexible material. The inner face of the cover or ear-piece of the receiver is shaped to conform approximately to the [fol. 291] shape of the diaphragm, and is situated at a comparatively short distance from this diaphragm, thereby avoiding an undue amount of space between the diaphragm and the cover or ear-piece.

In order that the invention may be clearly understood and readily carried into effect I will now describe the same more fully with reference to the accompanying drawings, in which:—

Figure 1 is a plan with the cover removed, and Fig. 2 a sectional elevation, of one constructional form of my improved receiver. These drawings represent a full size receiver, and the more important dimensions such as the diameter of the diaphragm, the extent of its eccentricity, and the volume and shape of the air space between the diaphragm and the ear-piece or cover, are what I have found by experiment to give good results for hearing with the receiver close to the ear, by reason, no doubt, of the relation these dimensions bear to the diameter of the ear-drum and the volume of the aural cavity. When it is desired to make the sounds travel out into the room, a receiver of larger size is preferable. Fig. 3 is a detail view of a diaphragm built up of several diaphragms of different diameter.

A is the casing and B the ear-piece or cover of the receiver.

C represents the coil and D the core of a polarized electromagnet of which N and S are the north and south poles respectively.

E is a metal reed one end of which is held down upon a bridge piece E′ on the casing E by two adjusting screws E²; the free end of this reed extends over the core D of the electro-magnet. A portion E³ of this reed is cut away to increase its flexibility and decrease its weight. I have found that a suitable free period for the reed is from eight hundred to one thousand. The extent to which the reed E can approach the core D may be regulated by packing some

layers of paper between these parts or by arranging a set screw to make contact with the reed.

F is a light aluminum diaphragm of conical form. It is attached at its center to the reed E at a point eccentric with respect to the axis of the core D, the eccentricity being toward the fixed end of the reed. Although I have shown the best position for attaching the diaphragm in the particular receiver illustrated, the best position on any reed can be found by experiment by means of a stethoscope and by exploring the reed with the aid of a movable diaphragm.

The diaphragm F is flexibly attached at its periphery by a ring F′ of tissue paper or other suitable material that will not exert appreciable restraint upon the diaphragm, to a removable flange on the casing A. This ring F′ may be attached to the diaphragm and to the aforesaid flange by adhesive.

It will be understood that owing to the extreme lightness of the diaphragm and to its freedom from peripheral constraint, it will be highly responsive to movements of the reed E and will vibrate as a whole. It will also be observed that the function of the reed E is not to set the air in motion, but only to carry the diaphragm and control its movement. This reed contains, within itself, by reason of its cut away portion E′, the means of its own control and that of the diaphragm, and also serves to complete the magnetic circuit; the diaphragm forms no part of this circuit. The inner face of the cover or ear piece B conforms approximately to the shape of the diaphragm and its distance from the diaphragm is such as to give only the requisite air space between these two parts. The sectional area of the central hole or holes in the ear-piece is suitably proportioned to the aforesaid air space.

Although the invention has been described and illustrated with reference to a "watch" type of receiver, it is of course equally applicable to the long handle type of receiver.

What I claim and desire to secure by Letters Patent of the United States is:—

1. In a telephone receiver, a coil through which the line currents pass, a resilient metal reed responsive to vibrations of current in the coil, and having an intermediate cut-away portion to impart inherent flexibility, a light rigid peripherally unrestrained conical diaphragm carried by its

center on said reed, and an ear piece situated over the diaphragm.

2. In a telephonic receiver, a polarized electromagnet, a coil through which the line currents pass, a resilient metal reed responsive to variations of current in the coil and having an intermediate cut-away portion to impart inherent flexibility, a light peripherally unrestrained conical diaphragm carried by its center on said reed, and an ear piece situated over the diaphragm.

3. In a telephonic receiver, a polarized electromagnet, a coil through which the line currents pass, a resilient member responsive to variations of current in the coil, a light peripherally unrestrained conical diaphragm carried by its center on said member eccentrically with respect to the electromagnet, and an ear piece situated over the diaphragm.

4. In a telephonic receiver, a polarized electromagnet, a coil through which the line currents pass, a resilient metal reed serving as electromagnet armature and having an intermediate cut-away portion to impart inherent flexibility, a peripherally unrestrained conical diaphragm carried by its center on the free end of the said armature, and an ear piece situated over the diaphragm.

5. In a telephone receiver, a coil through which the line [fol. 292] currents pass, a resilient metal reed responsive to variations of current in the coil and having an intermediate cut-away portion to impart inherent flexibility, a light peripherally unrestrained conical diaphragm carried by its center on said reed, and an ear piece the inner face of which conforms approximately to the conical shape of the diaphragm.

6. In a telephone receiver, a casing, a polarized electromagnet attached to the back of the casing, a coil through which the line currents pass, a resilient metal reed responsive to variations of current in the coil and having an intermediate cut-away portion to impart inherent flexibility, a light conical diaphragm carried by its center on said reed with its apex pointing toward the back of the casing, and a cover or ear-piece with a conical inner face conforming approximately to that of the diaphragm.

7. In a telephone receiver, a diaphragm comprising a conically shaped sheet of metal thickest at the center and

E. R. JOHNSON.
SOUND BOX DIAPHRAGM.
APPLICATION FILED FEB. 16, 1912.

1,180,401.

Patented Apr. 25, 1916.
4 SHEETS—SHEET 1.

Fig. 1.

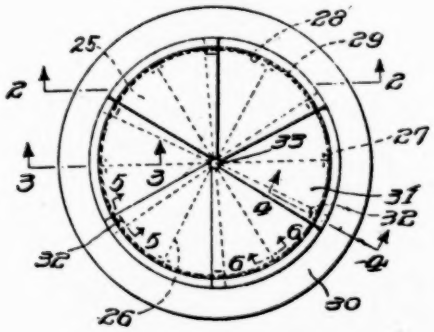

Fig. 2.

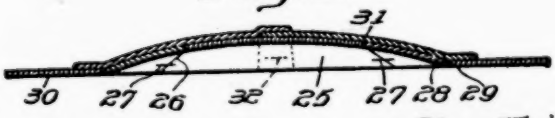

Fig. 3.

Fig. 4.

Fig. 7.

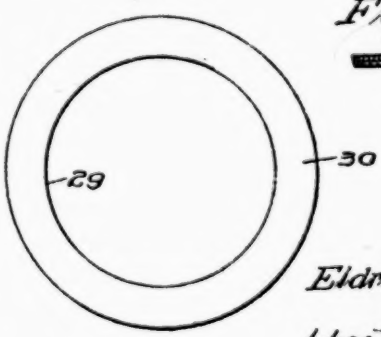

Fig. 5.

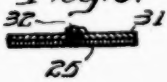

Fig. 6.

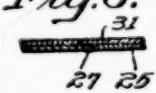

INVENTOR
Eldridge R. Johnson

WITNESSES
F. J. Hartman.
Clifton C. Hallowell

BY
Howe Pettit.
ATTORNEY

E. R. JOHNSON.

SOUND BOX DIAPHRAGM.

APPLICATION FILED FEB 16, 1912.

1,180,401. Patented Apr. 25, 1916.

4 SHEETS—SHEET 2.

Fig. 8.

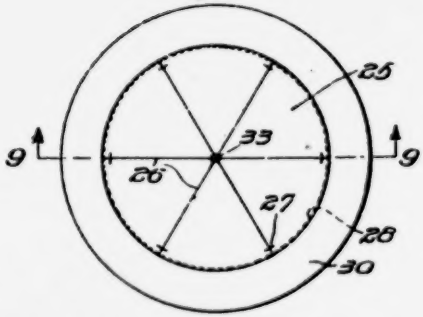

Fig. 9.

Fig. 11.

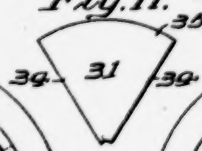

Fig. 10.

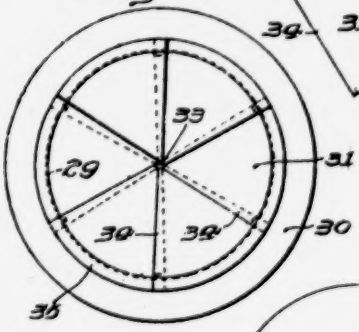

Fig. 12.

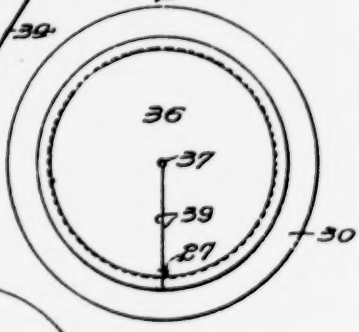

Fig. 13.

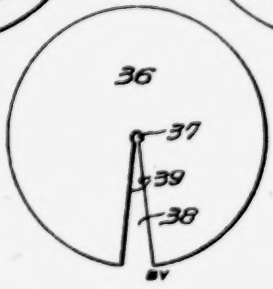

INVENTOR

Eldridge R. Johnson

BY

Horace Pettit.

ATTORNEY

WITNESSES

F. J. Hartman.

Clifton C. Hallowell

E. R. JOHNSON.

SOUND BOX DIAPHRAGM.

APPLICATION FILED FEB. 16, 1912.

1,180,401. Patented Apr. 25, 1916.

4 SHEETS—SHEET 3.

Fig. 14.

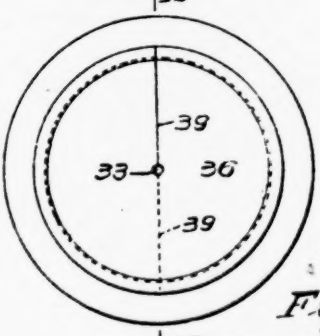

Fig. 16.

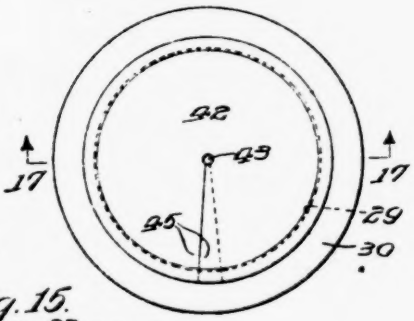

Fig. 15.

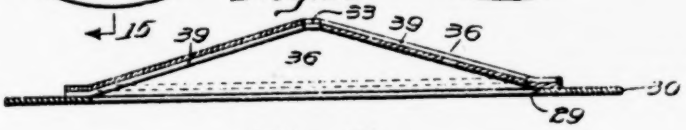

Fig. 17.

Fig. 18.

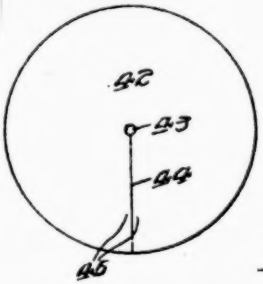

Fig. 19.

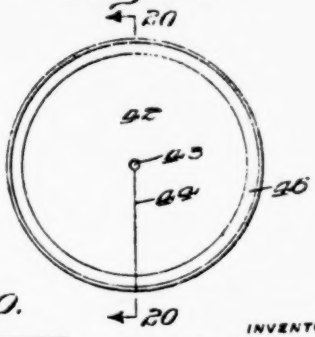

Fig. 20.

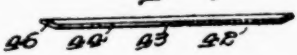

INVENTOR

Eldridge R. Johnson

BY

Wm. Fell

ATTORNEY

WITNESSES

H. J. Hartman.

Clifton C. Callwell

E. R. JOHNSON.
SOUND BOX DIAPHRAGM.
APPLICATION FILED FEB. 16, 1912.

1,180,401. Patented Apr. 25, 1916.
4 SHEETS—SHEET 4.

Fig. 21.

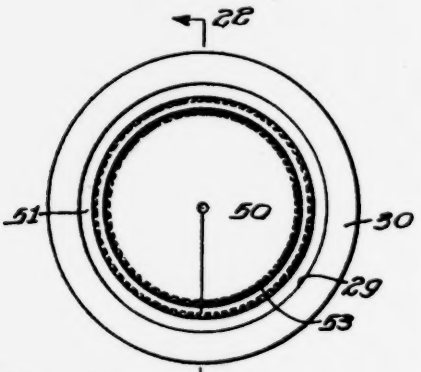

Fig. 22.

Fig. 23.

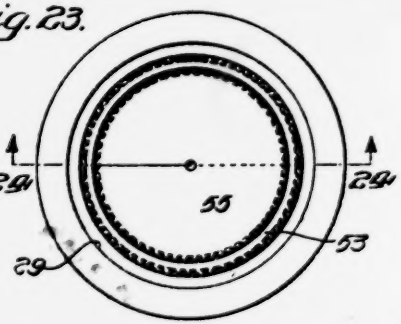

Fig. 24.

INVENTOR
Eldridge R. Johnson

WITNESSES
F. J. Hartman.
Clifton C. Callowell

BY [signature]

ATTORNEY

progressively thinner toward the periphery, and a resilient member for carrying said diaphragm by its center.

8. In a telephone receiver, a conically spun aluminum diaphragm thickest at the center and progressively thinner toward the periphery, and a resilient member for carrying said diaphragm by its center.

9. In a telephone receiver, a diaphragm comprising a sheet of metal having a flat centerpiece and a conical flange portion the thickness of which decreases progressively toward the periphery, and a resilient member for carrying said diaphragm by its center.

10. In a telephone receiver, an aluminum diaphragm comprising a flat centerpiece and a conically spun flange portion the thickness of which decreases progressively toward the periphery, and a resilient member supporting the diaphragm by its center.

11. In a telephone receiver, a casing, a coil through which the line currents pass, a resilient member responsive to variations of current in the coil, a light conical diaphragm carried by its center on said member, an ear piece situated over the diaphragm, and a flexible ring of material connecting the periphery of the diaphragm to the casing, said material being so thin and light as to exert no appreciable restraint upon the diaphragm.

12. In a telephone receiver, a casing, removable flange thereon, a polarized electro-magnet, a coil through which the line currents pass, a resilient member responsive to variations of current in the coil, a light rigid diaphragm carried by said resilient member, and a thin flexible ring of material connecting the periphery of the diaphragm to the aforesaid removable flange, said material being so thin and light as to exert no appreciable constraint upon the diaphragm.

In testimony whereof I affix my signature in presence of two witnesses.

Sidney George Brown.

Witnesses: W. Henry Harvey, W. J. Skerten.

(Here follow drawings, side folios 293, 294, 295 and 296)

[fol. 297] United States Patent Office

Eldridge R. Johnson, of Merion, Pennsylvania, Assignor to Victor Talking Machine Company, a Corporation of New Jersey

Sound-box Diaphragm

Specification of Letters Patent

1,180,401. Patented Apr. 25, 1916

Application Filed February 16, 1912. Serial No. 678,120

To all whom it may concern:

Be it known that I, Eldridge R. Johnson, a citizen of the United States, and a resident of Merion, county of Montgomery, and State of Pennsylvania, have invented certain new and useful improvements in Sound-Box Diaphragms, whereof the following is a specification, reference being had to the accompanying drawings.

This invention is particularly directed to vibratory diaphragms for sound recording and reproducing devices, such as may preferably be adapted to the sound reproducing mechanism of a talking machine.

The principal object of this invention is, to provide a diaphragm that will readily respond to the most delicate and rapid vibrations, and accurately record and reproduce all of the high and low tones and the included range with equal clearness and with substantially the same intensity as the original sounds.

Other objects of this invention are, to provide a diaphragm of such construction as to substantially eliminate any stresses and strains that tend to produce false tones or in any way effect the intensity, accuracy and clearness of the reproduction; to provide a diaphragm having its engaged periphery formed of a relatively narrow separate member, and having its major portion separately formed and secured thereto.

Other objects of this invention are, to provide a diaphragm having a bulged major portion formed of a radially slitted disk of sheet material, such as mica, isinglass, celluloid, paper, and similar materials, having its opposed edges secured in overlapped relation; to provide a diaphragm

having a bulged major portion formed of a peripherally recessed disk of sheet material having its opposed edges secured in abutted relation; to provide a diaphragm having a bulged major portion formed of a plurality of sectoral sections respectively secured together, with their edges in overlapped relation; to provide a diaphragm having a bulged major portion formed of a plurality of sectoral sections respectively secured together, with their edges abutted; to provide a diaphragm having a bulged laminated portion formed of separate pieces having abutted edges, the abutted edges of the respective laminations being relatively out of registry; to provide a diaphragm having a bulged major portion formed of sections respectively having their edges secured to the edges of adjacent sections by stitching; to provide a diaphragm having a bulged major portion provided with a peripheral integral flange extended at an angle with respect to the central portion and in a plane normal to the axis of said diaphragm; and to provide a diaphragm having a bulged major portion, connected with a separate annular flange spaced therefrom by an annular web of relatively thin material.

Generally stated, the form of this invention hereinafter described provides a flat, annular, vibratory flange, to which is secured a bulged or conical substantially inflexible major portion adapted to reciprocate as a whole within the engaged peripheral edge of said annular flange.

In the accompanying drawings, Figure 1 is a face view of a diaphragm showing a convenient embodiment of this invention; Fig. 2 is a sectional view of said diaphragm taken on the line 2—2 in Fig. 1; Fig. 3 is a fragmentary sectional view of said diaphragm taken on the line 3—3 in Fig. 1; Fig. 4 is a fragmentary sectional view of said diaphragm taken on the line 4—4 in Fig. 1; Fig. 5 is a fragmentary sectional view of said diaphragm taken on the line 5—5 in Fig. 1; Fig. 6 is a sectional view of said diaphragm taken on the line 6—6 in Fig. 1; Fig. 7 is a face view of the annular peripheral supporting flange, per se; Fig. 8 is a face view of a modification of the diaphragm shown in Fig. 1; Fig 9 is a central transverse sectional view of the diaphragm shown in Fig. 8, taken on the line 9—9 in said figure; Fig. 10 is a face view of another modification of the diaphragm shown in Fig. 1; Fig. 11 is a face view of one of the segments forming the conical central portion of the diaphragm shown in

Fig. 10; Fig. 12 is another modification of the diaphragm shown in Fig. 1; Fig. 13 is a face view of the flat blank from which the central portion of the diaphragm shown in Fig. 12 [fol. 298] is formed; Fig. 14 is a face view of another modification of the diaphragm shown in Fig. 1; Fig 15 is a central transverse sectional view of the diaphragm shown in Fig. 14, taken on the line 15—15 in said figure; Fig. 16 is a face view of another modification of the diaphragm shown in Fig. 1; Fig. 17 is a central transverse sectional view of the diaphragm shown in Fig. 16, taken on the line 17—17 in said figure; Fig. 18 is a face view of the flat blank from which the central portion of the diaphragm shown in Figs. 16 and 17 is formed; Fig. 19 is a face view of the blank shown in Fig. 18, having its peripheral margin slightly turned up to form a flange for engagement with the annular ring shown in Fig. 7; Fig. 20 is a central transverse sectional view of the blank shown in Fig. 19, taken on the line 20—20 in said figure; Fig. 21 is a face view of another modified form of diaphragm; Fig. 22 is a central transverse sectional view of the diaphragm shown in Fig. 21, taken on the line 22—22 in said figure; Fig. 23 is a face view of another form of the diaphragm shown in Fig. 21; and Fig. 24 is a central transverse sectional view of the diaphragm shown in Fig. 23, taken on the line 24—24 in said figure.

In the omnibus form of this invention shown in Fig. 1 of the drawings, the central major portion of the diaphragm comprises a laminated structure formed of a plurality of sectoral members 25, respectively having their radial or lateral edges 26 abutted and joined by stitches 27, and having their circumferential or outer edges 28 abutted with the inner edge 29 of the peripheral annular supporting flange member 30. Superimposed upon the conical structure formed by the sectoral members 25, are a plurality of relatively broad sectoral members 31 respectively having their radial or lateral margins overlapping the margins of their adjacent members and conveniently secured together by any suitable means, preferably by an adhesive or by stitches 32, or both, and having their circumferential margins overlapping the annular flange 30.

As best shown in Fig 1, the abutted edges of the sectoral members 25 are preferably disposed intermediate of the overlapped margins of the sectoral members 31. The diaphragm thus formed is preferably provided with a central

aperture 33, for the convenient attachment with a stylus bar (not shown).

The form of this invention shown in Figs. 8 and 9 is a simplification of the diaphragm shown in Figs. 1 to 7, inclusive, and comprises a major central conical portion formed of sectoral members 25, preferably secured together by stitches 27, and having their circumferential or outer edges 28 in abutted relation to the inner edge 29 of the annular flange member 30, as the subjacent lamina formed by the members 25, shown in Fig. 1. The abutted radial or lateral edges 26 of the members 25, and the abutted circumferential or outer edges 28 of said sectoral members 25, and the edges 29 of the annular flange member 30 may preferably be secured by a suitable adhesive to form a substantially integral structure.

It is to be understood that while the stitches 27 are shown as disposed only near the periphery of the conical structure formed by the sectoral members 25, said sectoral members may be secured together by stitches disposed at different regions along the abutted edges, and, furthermore, the conical structure formed by said sectoral members 25 may be secured to the annular flange member 30 by stitches in the same manner.

The form of this invention shown in Figs. 10 and 11 is another simplification of the structure shown in Figs. 1 to 7, inclusive, and comprises the annular flange member 30, and the central conical major portion comprising the sectoral members 31 respectively having their radial or lateral margins 34 in overlapped relation with the adjacent sections, and their circumferential margins 45 flanged in a plane normal to the axis of the conical structure thus formed, and preferably secured by an adhesive in overlapped relation with the inner margin adjacent to the edge 29 of the annular flange member 30.

The form of this invention shown in Figs. 12 and 13 is a still further simplification of the structure shown in Figs. 1 to 7, inclusive, and comprises the annular flange member 30, and the central conical major portion formed of a single piece 36 of sheet material having a central circular opening 37 and a V-shaped recess 38, forming opposed edges 39 which are substantially radial to the center of the piece 36. The radial edges 39 formed by the recess 38 in the piece 36 are brought together and secured, preferably by an adhe-

sive or by the stitches 27, or both, as shown in Fig. 12, thus forming a conical major portion having a periphery of greater diameter than the inner diameter of the annular flange member 30, and having its peripheral margin in overlapped relation with the inner margin of the annular flange member 30, and secured thereto in any suitable manner, preferably by an adhesive.

The form of this invention shown in Figs. 14 and 15 is a structure similar to the form of the invention shown in Figs. 12 and 13, but having the central conical major portion laminated and comprising superimposed conically formed pieces 36 of sheet material, secured together with their respective abutted edges 39 disposed out of registry; that is to say, the abutted edges 39 of the subjacent conically [fol. 299] formed piece 36 being disposed beneath an uncut portion of the web of the superjacent conically formed piece 36, and the abutted edges 39 of said superjacent member being disposed over an uncut portion of the web of said subjacent member, the abutted edges 39 of the respective lamina being preferably disposed in alinement, as best shown in Fig. 14, the conical central major portion overlapping, and being secured to the inner margin of the annular flange member 30, adjacent to the edge 29.

The form of this invention shown in Figs. 16 to 20, inclusive, comprises a still further simplified structure, comprising the annular flange member 30, and the central conical major portion formed of a single piece 42 of sheet material, which, as best shown in Fig. 18, is a circular disk having a central aperture 43, and provided with a radial slit 44, forming opposed edges, the margins 45 along which may be overlapped, as shown in Fig. 16, to form the central conical substantially inflexible major portion of the diaphragm.

As shown in Figs. 19 and 20, the peripheral margin of the piece 42 may be slightly upturned to form a marginal flange 46 (see Fig. 20) before having the edges of the slit 44 overlapped. Thus it will be seen that when the margins 45 along the edges of the slit 44 are overlapped and secured together to form the conical piece 42, the flange 46 will occupy a position in a plane substantially normal to the axis of the conical central major portion formed by the piece 42, which flange 46 may be readily secured in any suitable manner, in overlapped relation with the inner margin of the annular flange member 30, as shown in Figs. 16 and 17.

The form of this invention shown in Figs. 21 and 22 is similar to the form shown in Figs. 12 and 13, in so far as the central conical major portion is concerned. In this form of the invention, however, the diameter of the conical central portion 50 is less than the inner diameter of the annular flange member 30, so, as best shown in Fig. 22, an annular gap 51 is formed between the outer periphery of the central portion 50 and the inner edge 29 of the annular flange member 30.

As best shown in Fig. 22, the central conical portion 50 may be secured to the annular flange member 30 by a relatively thin annular membrane 52, which is suitably secured to one face of the annular flange member 30, and to the inner peripheral margin of said conical portion 50 and an annular membrane 53 secured to the membrane 52 between the inner edge 29 of the annular flange member 30 and the outer edge of the portion 50, and overlapping the peripheral margin of said portion 50 and secured to its outer face. By this construction it will be seen that the central portion 50 being substantially inflexible, has a great freedom of reciprocation with respect to the flange member 30, with which it is connected by the relatively thin and highly flexible membrane.

The form of this invention shown in Figs. 23 and 24 is similar to the form shown in Figs. 14 and 15, in so far as the central conical portion of the diaphragm is concerned and comprises the conical central major portion 55 formed of limina members 56, substantially formed as shown in Fig. 13 and placed together substantially as shown in Figs. 14 and 15, inclusive. In this form of the invention, like the form shown in Figs. 21 and 22, the outer periphery of the central conical major portion of the diaphragm is less than the diameter of the inner edge of the annular flange member 30, and is joined by the membranes 52 and 53 respectively, as in said Figs. 21 and 22.

It is believed that by forming a diaphragm with an annular flange which is separate from and secured to a separately formed conical central major portion in the manner above set forth, undesirable strains and stresses which would be incident to the forming of a diaphragm of a single piece of sheet material having its central portion bulged, will be substantially eliminated, and the annular flange thus formed will be therefore more susceptible in responding to

the vibrations occasioned by sound waves, than if the diaphragm were formed of a single piece.

Although the diaphragm as above described is referred to generally as being formed of sheet material, it is to be understood that it is preferable to form said diaphragm of mica or like material, which, as will be noted, may be readily cut and formed into the desired shapes, and which may have its parts secured by stitching, to prevent the accidental separation of said parts.

It is not desired to limit this invention to the precise details of construction and arrangement herein set forth, as it is obvious that various modifications may be made therein without departing from the essential features of the invention as defined in the appended claims.

Having thus described by invention, I claim:

1. In a diaphragm, the combination with a separately formed annular flange member of sheet material, having inner and outer edges, of a conical central major portion having a central aperture and comprising a sectoral section of sheet material having radial edges secured together and a peripheral edge secured to the inner edge of said flange member.

2. In a diaphragm, the combination with a separately [fol. 300] formed annular peripheral flange member of sheet material, of a conical central major portion having a central aperture and comprising a sectoral section of sheet material, having radial edges secured together and a margin secured in overlapped relation with the inner margin of said annular flange member

3. In a diaphragm, the combination with a separately formed annular member of sheet material, having inner and outer edges, of a substantially conical central major portion having a central aperture and comprising a sectoral section of sheet material, having its radial edges secured together, and its peripheral edge secured to the inner edge of said annular member.

4. In a diaphragm, the combination with a separately formed annular member of a conical central major portion comprising a sectoral section, having its radial edges secured together and its peripheral edge extended over the inner margin of said annular member and secured thereto.

5. In a diaphragm, the combination with a separately formed annular member, of a conical central major portion

comprising a sectoral section of sheet material, having its radial edges secured together, and its peripheral margin extended to form a flange, in a plane normal to the axis of the conical structure thus formed, and means for securing said flanged portion with said annular member.

6. In a diaphragm, the combination with a separately formed annular member, of a conical central major portion comprising a sectoral section of sheet material, having the margins along its radial edges secured in overlapped relation, and its peripheral edge secured to said annular member.

7. In a diaphragm, the combination with a separately formed annular member of sheet material, of a conical central major portion comprising a sectoral section of sheet material, comprising a substantially circular disk having a radial slit, the margins along said slit being secured in overlapped relation, and having its peripheral margin secured to said annular member.

8. In a diaphragm, the combination with a separately formed annular member, of a bulged central major portion having a central aperture and comprising a sectoral section of sheet material formed of a disk having a radial slit, the margins along said slit being secured in overlapped relation, and the peripheral margin being flanged in a plane normal to the axis of the bulged structure thus formed, said flange being secured in overlapped relation with said annular member.

9. In a diaphragm, the combination with a separately formed member of sheet material, having inner and outer edges, of a conical central major portion comprising a sectoral piece of sheet material, having its lateral margins secured in overlapped relation, and having its outer margin extended over a portion of said annular member and secured thereto.

10. A diaphragm formed of an annular peripheral member of sheet material, and a separately formed central major portion comprising a disk of sheet material slitted radially and having its peripheral edge upturned to form a flange for engagement with said peripheral member.

11. A diaphragm formed of an annular peripheral member of mica, and a separately formed central major portion

comprising a disk of mica slitted radially and having its peripheral edge upturned to form a flange for engagement with said peripheral member.

12. A diaphragm formed of a peripheral member of mica, and a separately formed central major portion comprising a disk of mica slitted radially and having its marginal radial edges overlapped and secured together by stitches.

13. A diaphragm comprising an annular member forming the outer portion of the diaphragm, and a cup-shaped member having an outer marginal edge secured to said annular member, and having edges secured together and extending inwardly from said marginal member, said cup-shaped member forming the central portion of said diaphragm.

14. A diaphragm comprising a substantially flat annular member forming the outer part of the diaphragm, and a cup-shaped member secured marginally to the inner margin of said annular member and provided with radial edges secured together.

15. A diaphragm comprising a substantially flat annular member forming the outer part of the diaphragm, and a cup-shaped member secured marginally to the inner margin of said annular member and provided with radial overlapped edges secured together.

16. In a diaphragm, the combination with a separately formed annular member of sheet material, having inner and outer edges, a cup-shaped central major portion, comprising sheet material having edges secured together and extending from the inner edge of said annular member inwardly, and having a peripheral edge secured to the inner edge of said annular member

17. A diaphragm comprising a cup-shaped member having edges extending from the periphery of the disk inwardly and secured together, and an annular member of sheet material, secured to the marginal portion of said disk.

18. A diaphragm comprising an annular member forming [fol. 301] the outer portion of the diaphragm and a disk of sheet material slit from the periphery thereof toward the center and having the edges adjacent said slit secured together to form a cupped member and the edge of the cupped member so formed being secured to the inner edge of said annular member.

J. H. ELFERING.
SOUND BOX DIAPHRAGM.
APPLICATION FILED NOV. 12, 1910.

1,182,078. Patented May 9, 1916.

Fig. 1.

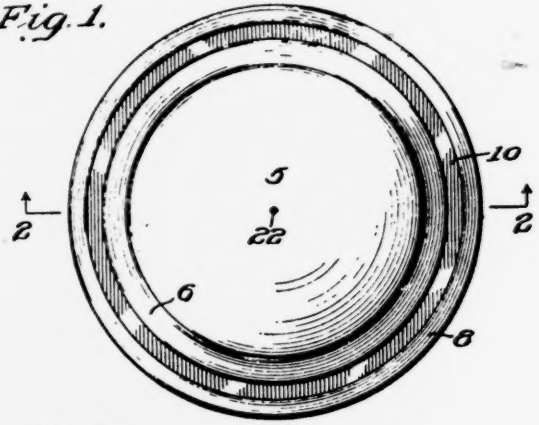

Fig. 2.

Fig. 3.

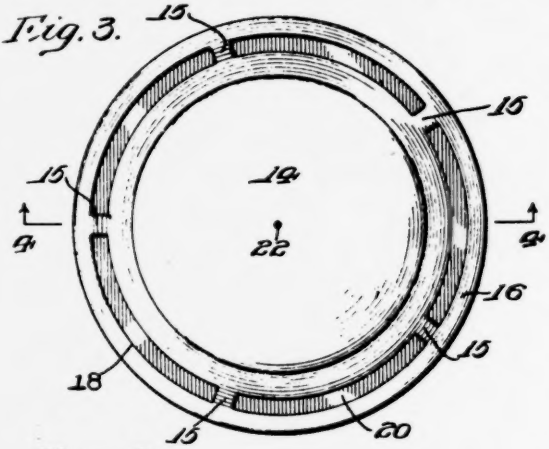

Fig. 4.

INVENTOR
John H. Elfering.

WITNESSES
F. J. Hartman.
Clifton C. Hallowell

BY
Howe Pettit.

ATTORNEY

In witness whereof, I have hereto set my hand this 9th day of February, A. D. 1912.

Eldridge R. Johnson.

Witnesses: Charles F. Willard, Frank B. Middleton, Jr.

(Here follows drawing, side folio 302)

[fol. 303] United States Patent Office

John H. Elfering, of Camden, New Jersey, Assignor to Victor Talking Machine Company, a Corporation of New Jersey

Sound-box Diaphragm

Specification of Letters Patent

1,182,078. Patented May 9, 1916

Application Filed November 12, 1910. Serial No. 591,947

To all whom it may concern:

Be it known that I, John H. Elfering, a citizen of the United States, and a resident of Camden, in the county of Camden and State of New Jersey, have invented certain new and useful improvements in Sound-Box Diaphragms, whereof the following is a specification, reference being had to the accompanying drawing.

This invention particularly relates to diaphragms for sound recording and reproducing devices, such as are preferably adapted to talking machines.

The principal object of this invention is to provide a diaphragm that will readily respond to the most delicate vibrations and accurately record and reproduce all of the high and low tones and the included range with equal clearness.

Further objects of this invention are to provide a diaphragm having its major portion formed substantially inflexible and capable or reciprocation independently of its margin; and to provide means to flexibly connect said inflexible major portion with said margin.

The form of this invention hereinafter described provides a diaphragm comprising a central conically dished inflexible plate, having a peripheral flange in a plane in substantially perpendicular relation to the axis of said conical plate, a separate annular margin surrounding said flange in a plane therewith, and a thin flexible imperforable membrane connecting said flange and margin and arranged to support said inflexible plate.

This invention further includes all of the various novel features of construction and arrangement hereinafter more definitely specified.

In the accompanying drawing Figure 1 is a front elevational view of a diaphragm showing the preferred embodiment of this invention; Fig. 2 is a central transverse sectional view taken on the line 2—2 in Fig. 1; Fig. 3 is a front elevational view of a modification of the structure shown in Fig. 1; and Fig. 4 is a tranverse sectional view of the diaphragm shown in Fig. 3 and taken on the line 4—4 in said figure.

In the form of this invention shown in Figs. 1 and 2 the central major portion of the diaphragm comprises the conically dished disk or plate 5, which as best shown in Fig. 2 has the peripheral flange 6 extended in a plane in perpendicular relation to the axis of said diaphragm and surrounded by the annular marginal member 8 in spaced relation to the periphery of said flange 6, and in a plane therewith. Said marginal member 8 is connected with the flange 6 by a thin membrane 10, which may be formed by any suitable imperforable flexible material, preferably gold beater's skin, and which may be conveniently secured to said connected members by any suitable adhesive material. Said membrane 10 is arranged to support the central conical plate 5 in reciprocatory relation to the marginal member 8 which may be suitably secured in a sound box of any convenient construction.

It may be here noted that the diaphragm may be formed of any suitable material preferably paper or other fibrous material which may be treated with a resinous solution or other convenient material to render it impervious to any atmospheric conditions or moisture or may be formed of any stiff sheet material.

The form of this invention shown in Figs. 3 and 4, provides a diaphragm similar to the diaphragm shown in Figs. 1 and 2, and comprises the rigid central portion forming the conically dished plate 14 which is connected by the narrow webs or spokes 15 with a sound box engaging marginal portion 16, forming the arc-shaped apertures 18, which are local to the periphery of said diaphragm, and which permit the free relative vibration of the central portion or plate 14, with respect to the marginal portion 16 to which it is connected by the flexible membrane 20. As best shown in Figs. 1 and 3, the central plates 5 and 14 are respectively provided with apertures 22, for the convenient attachment of a stylus bar (not shown) which may be cooperative therewith to record and reproduce sound.

It is well known that in diaphragms wherein the margin is engaged in a sound box, and the intermediate portion is free to vibrate to reproduce sound, the central portion which is connected with the stylus bar is afforded the maximum vibration, while the surface intermediate of the central portion and the periphery vibrates with varying force diminishing toward the margin of the diaphragm which is engaged. Therefore it will be readily observed that a dia- [fol. 304] phragm constructed in accordance with this invention is advantageous in that the major portion is substantially inflexible, and is reciprocated bodily, thus vibrating substantially uniformily throughout its extent, and consequently the compression and rarefaction of the air in the sound conveyor due to the vibration of said diaphragm is uniform throughout its extent.

It is not desired to limit this invention to the precise details of construction and arrangement herein set forth, as it is obvious that various modifications may be made therein without departing from the essential features of the invention as defined in the appended claims.

Having thus described my invention, I claim:

1. A diaphragm having a substantially rigid major central portion, a marginal portion connected thereto by relatively narrow flexible radial sections, and a flexible concentric membrane intermediate of said central and said marginal portions.

2. A diaphragm having a rigid major central portion connected with a marginal portion by integral relatively

narrow flexible radial sections and a flexible web connecting said central portion and marginal portion together.

3. A diaphragm comprising a central comparatively rigid conical dished major portion, a surrounding portion and a plurality of radial webs and an annular web connecting said portions.

In witness whereof I have hereunto set my hand and seal this 9th day of November A. D. 1910.

John H. Elfering. (L. S.)

Witnesses: Edward E. MacEwan, Frank B. Middleton, Jr.

(Here follows drawing, side folio 305)

[fol. 306] United States Patent Office

John C. English, of Camden, New Jersey, Assignor to Victor Talking Machine Company, a Corporation of New Jersey

Sound-Box

Specification of Letters Patent

1,192,289. Patented July 25, 1916

Application filed January 23, 1912. Serial No. 672,961

To all whom it may concern:

Be it known that I, John C. English, a citizen of the United States, and a resident of the City of Camden, county of Camden, and State of New Jersey, have invented certain new and useful Improvements in Sound-Boxes, of which the following is a specification.

The main objects of this invention are to provide in a sound box for talking machines, adjustable means for supporting the major portion of the same; to provide in a sound box an improved diaphragm and mounting therefor; and to provide other improvements as will appear hereinafter, the purpose as a whole being to provide a sound box that will be extremely efficient in operation.

In the accompanying drawings, Figure 1 is a fragmentary front elevation of a sound box constructed in accord-

J. C. ENGLISH.

SOUND BOX,

APPLICATION FILED JAN. 23, 1912.

1,192,289.

Patented July 25, 1916.

Fig. 1.

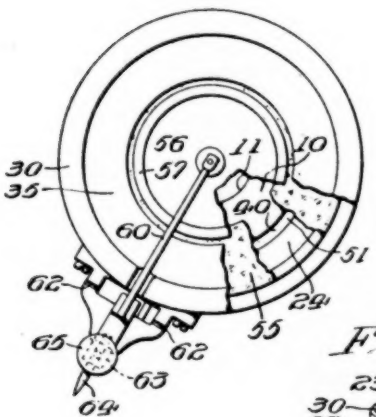

Fig. 2.

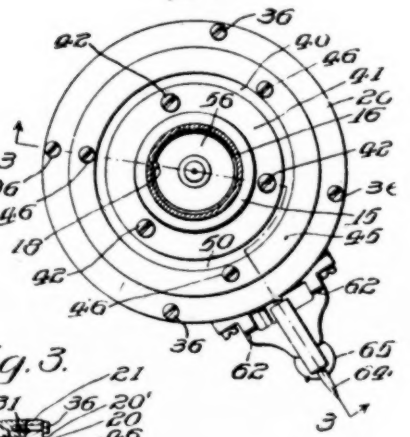

Fig. 3.

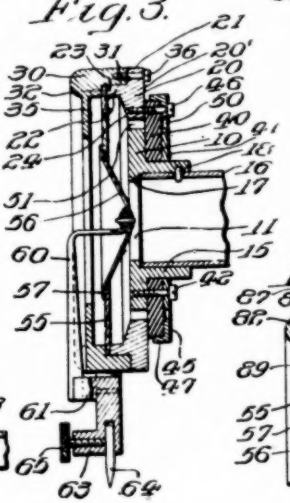

Fig. 4.

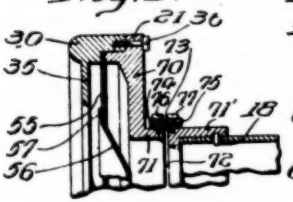

Fig. 5.

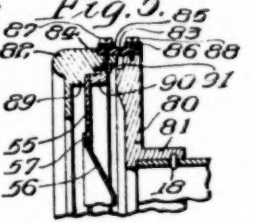

INVENTOR

John C. English.

WITNESSES

F. J. Hartman.

A. L. Gardner.

ATTORNEY

ance with this invention; Fig 2 a rear elevation of the same; Fig. 3 a longitudinal section on line 3—3 of Fig. 2; and Figs. 4 and 5 are fragmentary longitudinal sections of two modified forms respectively of the same.

Referring to the drawings, one embodiment of this invention consists of a sound box comprising a casing, including a flat annular supporting plate or member 10, co-axial with the casing and forming a portion of the back thereof. This supporting plate 10 is preferably made of comparatively rigid material, such as brass or any other suitable metal. Surrounding the central opening 11 of this plate 10 and projecting rearwardly from the plate, and integral or rigid therewith, is a tubular extension 15, which is adapted to telescope over the open free end of the usual or any suitable hollow tone arm 16 or other support. The internal diameter of the tubular extension 15 is preferably somewhat greater than the diameter of the central opening 11 of the supporting plate 10, thus forming an internal annular shoulder 17 between the tubular extension 15 and the supporting plate 10, this shoulder being adapted to abut against the inner end of the hollow tone arm 16 to assist in holding the sound box in position upon the tone arm. The usual pin 18 projects inwardly from the tubular extension 15 rigid therewith, and is adapted to perform its usual function of engaging in a bayonet slot in the tone arm 16. The diameter of the opening 11 in the supporting plate and the internal diameter of the tone arm 16, are preferably made equal so that the inner surface of the tone arm 16 will be flush with the cylindrical wall of the opening 11.

Surrounding the supporting plate 10 co-axial therewith and slightly spaced therefrom, is an annular marginal member 20, also forming a portion of the back of the casing of the sound box, and preferably made of the same material as the supporting plate 10, or of any suitable comparatively rigid material. The rear surface 20′ of this marginal member 20, is preferably flat and normally flush with the rear surface of the supporting plate. This marginal member 20 is provided upon its outer margin with an outwardly projecting flat annual- flange 21, integral and coaxial therewith and arranged flush with the rear surface 20′ of the marginal member. The marginal member 20 projects forwardly from its flat annular flange 21 in the

form of a cylindrical flange 22 having a flat annular forwardly facing end wall 23. From the cylindrical flange 22, the marginal member 20 tapers inwardly in thickness measured in a direction perpendicular to the rear surface 20′, and the inner face 24 of the member 20 is conical in form and coaxial with the tubular extension 15.

Telescoping snugly over the cylindrical flange 22 of the marginal member 20 is a hollow cylindrical cap 30, also preferably made of brass or other suitable comparatively rigid material. This cap 30 has a flat annular rear wall 31 normally abutting against the front face of the flange 21 of the marginal member 20, and is provided with an internal annular shoulder 32 normally spaced slightly in front of the end wall 23 of the flange 22 of the marginal member 20 and of equal dimensions. The front portion of the cap 30 is provided with an inwardly projecting flat thin annular flange 35, coaxial and integral or rigid therewith. The cap 30 is secured to the marginal member 20 by means of screws 36 extending through the flange 21 and threaded into the rear wall of the cap, or by any other suitable means.

[fol. 307] For yieldingly supporting the marginal member 20 and cap 30 carried thereby, a flat yielding annulus 40 snugly surrounds the tubular extension 15 and is secured to the rear wall of the supporting plate 10 and also to the rear wall of the marginal member 20. This yielding annulus 40 is preferably made of felt, leather, paper, cork, rubber, or any other similar or suitable yielding material. It has been found that felt gives very good results in this connection. The annulus 40 is preferably clamped securely against the rear wall of the supporting plate 10 by means of a metal or other comparatively rigid annular washer 41, fitting snugly around the tubular extension 15, and clamped against the rear face of the annulus 40 by means of headed screws 42, extending loosely through the washer 41 and annulus 40 and threaded into the supporting plate 10. The annulus 40 is also preferably clamped securely against the rear wall of the marginal member 20 by means of a similar flat annular outer washer 45, surrounding and spaced from the inner washer 41 and clamped against the rear wall of the annulus 40 by means of headed screws 46 extending loosely through the washer and annulus and

threaded into the marginal member 20. The screws 42 through the inner washer 41 are preferably arranged in staggered relation with respect to the screws 46 of the outer washer 45. This outer washer 45 is preferably provided with an inwardly projecting marginal cylindrical flange 47 which engages snugly over the outer marginal wall of the annulus 40, and the inner end wall of which is normally spaced slightly from the rear wall of the marginal member 20. This flange 47 serves to confine the annulus 40 within certain limits and also protects the margin of the annulus and improves the appearance of the sound box.

The annular space 50 between the inner and outer washers 41 and 45 is preferably opposite and substantially equal in area to the area of the space 51 between the supporting plate 10 and the marginal member 20, and these spaces are preferably only of sufficient width to permit of a desirable amount of yielding or flexing of the annulus 40 throughout the annular portion of the annulus included between these two annular spaces.

Any suitable diaphragm may be used in connection with the casing of this improved sound box, but in the present instance, an improved diaphragm, which has been made the basis of a separate application, is shown in this connection. This improved diaphragm comprises a thin flat outer annular portion 55, made of cork or a composition of cork, or made of other subereous or suitable yielding material, having little, if any tendency, to set up local vibrations. Surrounded by the flat annular portion 55 is a thin comparatively rigid cupped or conical portion 56, made of any suitable material, such as stiff paper, and arranged normally coaxial with the sound box casing, and having its convex side facing rearwardly. The marginal portion 57 of this conical portion 56 is preferably slightly flattened and overlaps the inner margin of the flat annular portion 55 and is secured thereto, preferably upon the front side thereof, by means of cement or glue, or in any other suitable manner.

The outer marginal portion of the diaphragm is clamped securely in position by and between the end wall 23 of the marginal member 20 of the internal shoulder 32 of the cap 30 of the sound box casing. The nature of the material forming the marginal portion of the diaphragm is such

that when the diaphragm is thus clamped in position, it adheres to the walls between, and by which it is clamped and any possibility of leakage of the air around the outer margin of the diaphragm is thus avoided, and also any tendency of the diaphragm to rattle is avoided.

Connected to the central portion or apex of the conical portion 56 of the diaphragm is one end of a stylus bar 60, which projects outwardly from the conical portion in a direction substantially coaxial therewith to a point in front of the flange 35 of the cap 30, and then turns radially outwardly in a direction parallel to the flange 35 and spaced slightly in front thereof. The outer portion 61 of this stylus bar is offset rearwardly outside of the cap 30 and is mounted upon the cap 30 to oscillate in respect thereto by means of spaced yielding connections 62, these yielding connections being preferably arranged so that the axis of oscillation of the stylus bar is substantially in a plane with the flat annular portion 55 of the diaphragm. The stylus bar is provided with an enlarged outer end 63 adapted to hold the usual or any suitable stylus 64, which is held in place by the usual set screw 65.

From the foregoing description, it is evident that in the construction described, the sound box casing may be considered broadly as being composed of two independently movable rigid members, one of which, including the marginal member 20 and the cap 30, carries the diaphragm and cooperating stylus, and the other of which including the supporting plate 10 and its tubular extension 15, is adapted to be mounted upon the tone arm 16 or other suitable carrier, these two main portions of the sound box casing being connected by a yielding or hinge-like means which permits of the relative movement of the main portions of the casing, and also acting as a closure for the space between these portions. It is also evident that the yielding [fol. 308] annulus 40 may be placed under a greater or less initial tension by adjusting the screws 42 and 46 to vary the compression of the annulus and that this variation of the initial aperture or tension would correspondingly affect the yielding qualities of the annulus and the freedom of movement between the two main portions of the sound box casing, and give a corresponding modification in the volume and quality of reproduction. It is also evident that in the

operation of this sound box, the central portion of the diaphragm will vibrate as a whole without flexing, and the surrounding portion will flex to permit of this vibration.

Instead of forming the back of the sound box casing as hereinbefore described, of two spaced annular members, one surrounding the other, the back of the sound box may be formed of a single piece as indicated at 70 in Fig. 4, and having a tubular extension 71, 71′ divided and spaced apart as at 72, the two portions 71 and 71′ of the tubular extension being yieldingly connected by a cylindrical ring 73 of yielding material, such as felt or rubber, etc., snugly surrounding the tubular extension and clamped to the two portions of the extension by means of comparatively rigid flanged rings 74 and 75 held in place by screws 76 and 77 extending through the rings and threaded into the two portions 71 and 71′ respectively of the tubular extension.

A further modification of this invention consists in forming the back of the sound box casing and its tubular extension in one part, as indicated at 80 and 81, respectively, and having an annular cap 82 spaced slightly in front of the back 80 and yieldingly connected thereto by means of a yielding cylindrical ring 83 surrounding the back 80 and engaging in an annular recess 84 provided therefor in the outer surface of the cap 82, the yielding ring 83 being clamped in position against the cap 82 and the back 80 by means of the rings 85 and 86 surrounding the yielding ring and held in place by screws 87 and 88 respectively, extending through the rings and threaded in to the cap and the back respectively. In this case, the diaphragm is clamped in place between a ring 89 and the flanged ring 90 carried by the cap 82, the latter ring being clamped in position by means of screws 91 extending through the ring and threaded into the cap.

This invention is not limited to any specific construction disclosed, as various changes might be made in applying this invention without departing from the spirit of the invention or the scope of the appended claims.

Having thus fully described my invention, I claim and desire to protect by Letters Patent of the United States:

1. A sound box casing comprising two spaced portions, yielding substantially nonresilient means connecting said portions and means arranged to limit the outward radial expansion of said first-named means.

2. A sound box comprising an annular supporting member provided with a tubular extension rigid therewith, an annular marginal member surrounding and spaced from said supporting member, and yielding means surrounding said tubular extension and connecting said supporting member and said annular marginal member.

3. A sound box comprising an annular supporting member provided with a tubular extension, an annular marginal member surrounding said supporting member, a diaphragm carried by said marginal member, and yielding means surrounding said tubular extension and connecting said supporting member and said marginal member.

4. A sound box comprising an annular supporting member, an annular marginal member surrounding said supporting member and spaced therefrom, yielding means connecting said members and forming a closure for the space between the same, and a diaphragm carried by said marginal member.

5. A sound box comprising an annular supporting member provided with a tubular extension rigid therewith, a second annular member surrounding said first-mentioned annular member, a diaphragm carried by said second annular member, and yielding means connecting said annular members.

6. A sound box comprising an annular supporting member provided with a tubular extension rigid therewith, an annular marginal member surrounding said supporting member and spaced therefrom, and a flat yielding annulus surrounding said tubular member and connecting said members.

7. A sound box comprising a casing including an annular supporting member provided with a tubular extension rigid therewith, an annular marginal member surrounding said supporting member and spaced therefrom, a substantially flat yielding annulus snugly surrounding said tubular extension and connecting said members, and annular means overlapping and engaging the outer margin of said annulus for holding the same in position.

8. A sound box comprising a casing including an annular supporting member having a tubular extension rigid therewith, an annular marginal member surrounding said supporting member and spaced therefrom, a yielding annulus surrounding said tubular extension outside of said mem-

bers, a washer surrounding said tubular extension, means for clamping said washer against said annulus, an outer washer surrounding and spaced from said first mentioned [fol. 309] washer, and means connected to said annular marginal member for clamping said outer washer against said annulus.

9. A sound box comprising a casing including an annular supporting member having a tubular extension rigid therewith, an annular marginal member surrounding said supporting member and spaced therefrom, a yielding annulus surrounding said tubular extension outside of said members, a washer surrounding said tubular extension, means for clamping said washer against said annulus, an outer washer surrounding and spaced from said first mentioned washer, and means connected to said annular marginal member for clamping said outer washer against said annulus, said latter washer being provided with an inwardly projecting marginal flange overlapping and engaging the marginal edge of said annulus.

10. A sound box comprising an annular supporting member provided with a tubular extension rigid therewith, an annular marginal member surrounding and spaced from said supporting member, an annular cap carried by said marginal member, a diaphragm clamped between said cap and said marginal member, and yielding means connecting said supporting member and said marginal member.

11. A sound box comprising an annular supporting member provided with a tubular extension rigid therewith, an annular marginal member surrounding and spaced from said supporting member, an annular cap carried by said marginal member, a diaphragm clamped between said cap and said marginal member, and yielding means connecting said supporting member and said marginal member, said diaphragm comprising a flat, annular yielding portion, and a comparatively rigid central portion surrounded by and secured to said flat yielding portion.

12. A sound box comprising an annular supporting member provided with a tubular extension rigid therewith, an annular marginal member surrounding and spaced from said supporting member, an annular cap carried by said marginal member, a diaphragm clamped between said cap and said marginal member, and yielding means connecting

said supporting member and said marginal member, said diaphragm comprising a flat, annular yielding subereous portion, and a comparatively rigid central portion surrounded by and secured to said flat yielding portion.

13. A sound box casing comprising two separately movable portions, yielding means forming the sole connection between the said portions and means arranged to compress said yielding means in one direction, said yielding means being held against expansion in a direction transverse to said first-mentioned direction.

14. A sound box casing comprising two spaced portions, yielding means holding said portions in spaced relationship, means to subject said yielding means to different degrees of compression, and means to limit the outward expansion of said yielding means.

15. A sound box casing comprising spaced portions, yielding annular means holding said portions in spaced relationship, means to subject said annular means to different degrees of compression and annular relatively rigid means inclosing said yielding means to limit the outward expansion of said yielding means.

16. A sound box casing comprising two spaced portions, yielding annular means forming a closure for the entire space between said portions, means clamping said yielding means to one of said portions, and means clamping said yielding means to the other said portions, said portions being in contact with said yielding means upon one side only of said yielding means.

In witness whereof, I have hereunto set my hand this 19th day of January, A. D. 1912.

John C. English.

Witnesses: Edward K. MacEwan, John D. Myers.

(Here follow drawings, side folios 310, 311, and 312)

[fol. 313] Also I may use differentially-wound or other transformers for the purpose of communicating electrically between each microphone and the receiving or vibrating coil of the next in the series. The vibrating coils may be wound of fine wire compacted together with cement such as shellac,

A.D. 1898. April 27. N° 9712.
LODGE'S Complete Specification.

(3 SHEETS)
SHEET 3

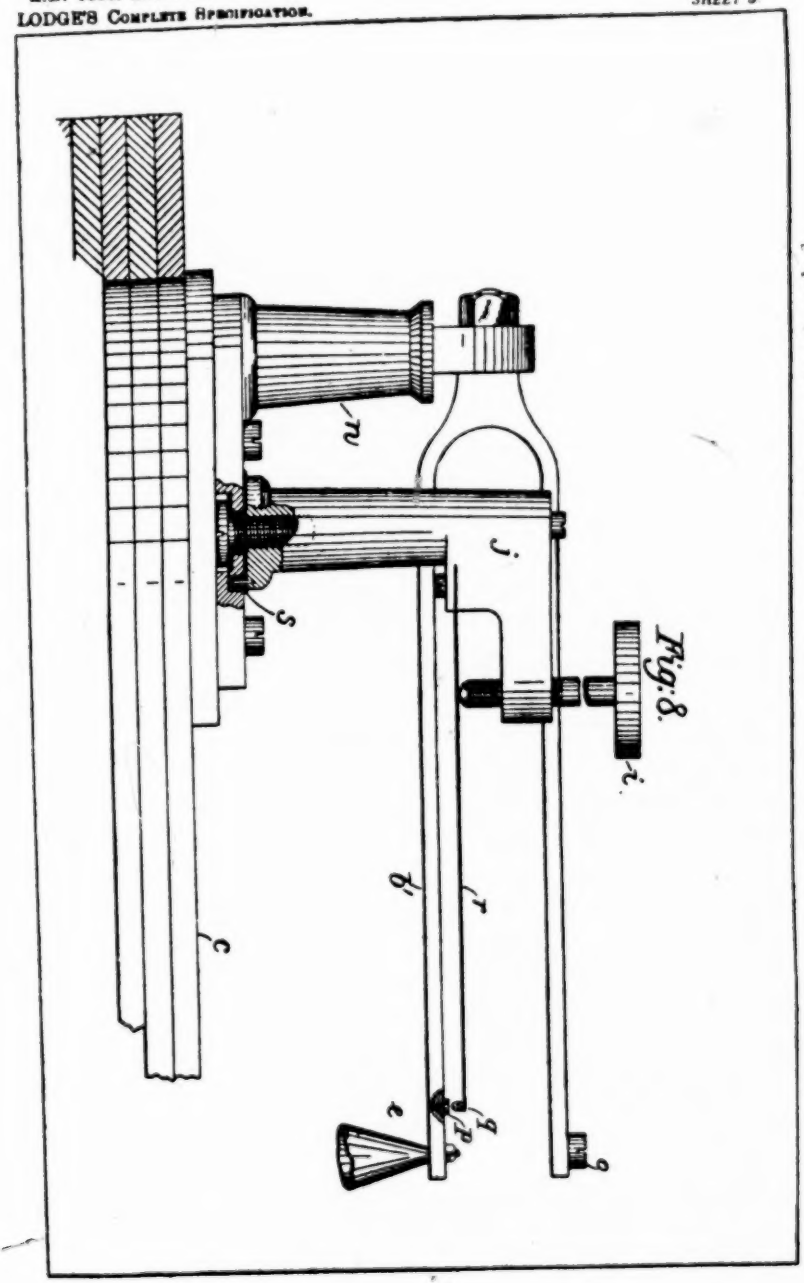

[This Drawing is a reproduction of the Original on a reduced scale.]

Fig:1.

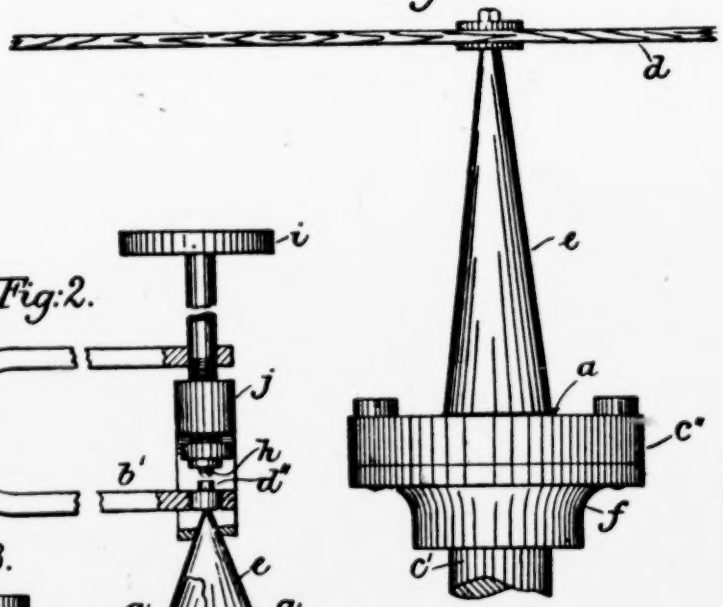

Fig:2.

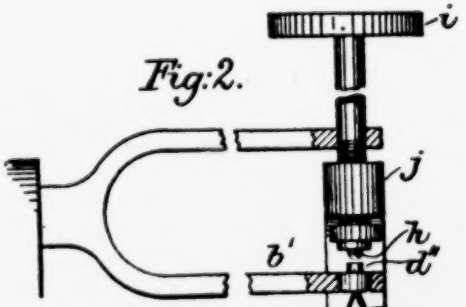

Fig:3.

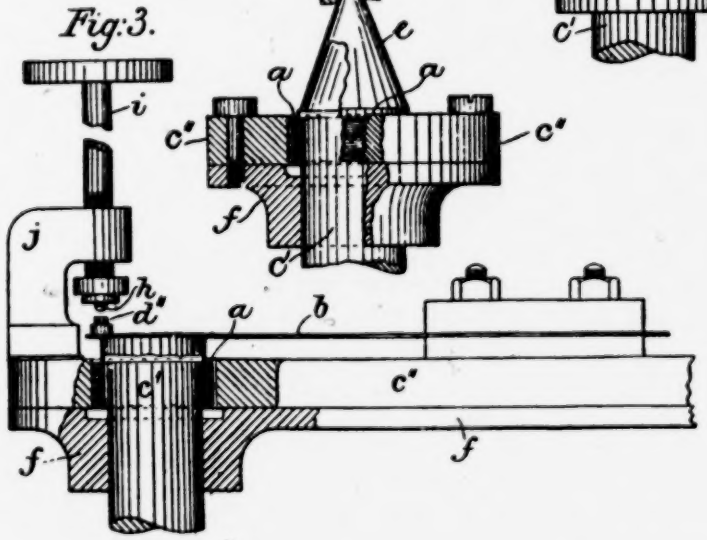

Fig:4.

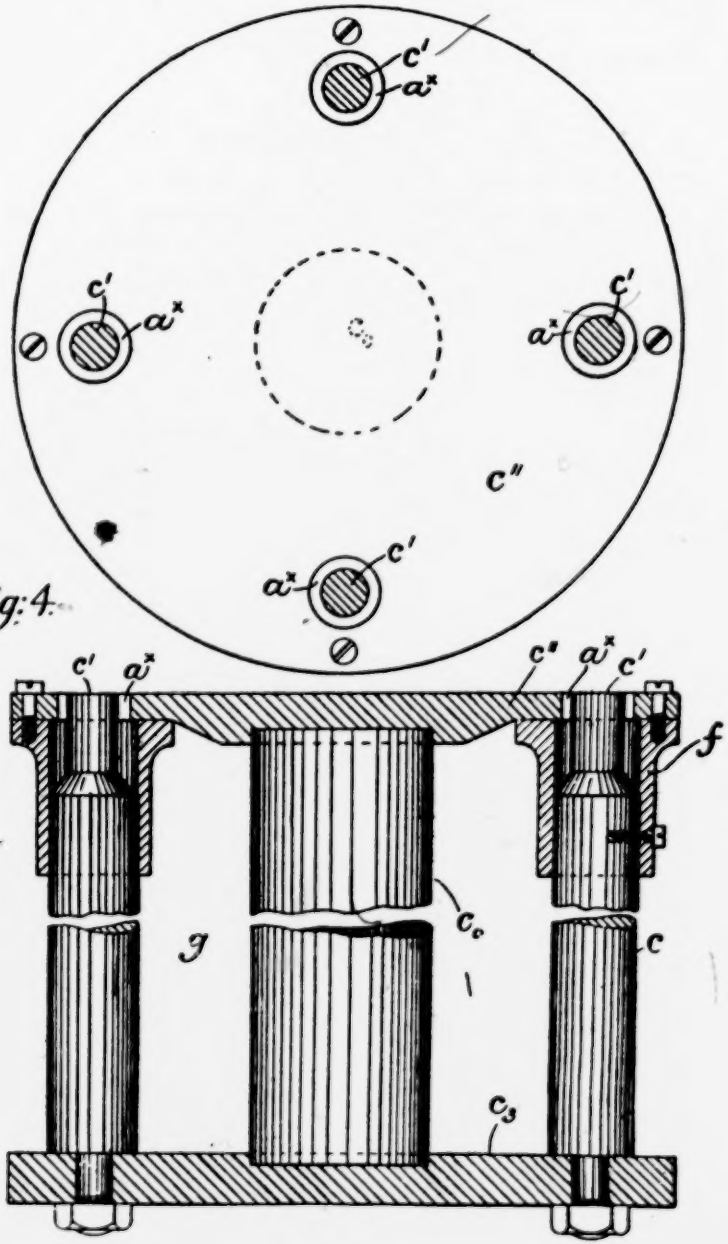

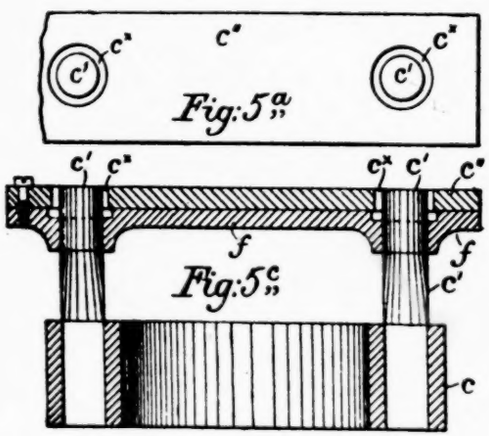

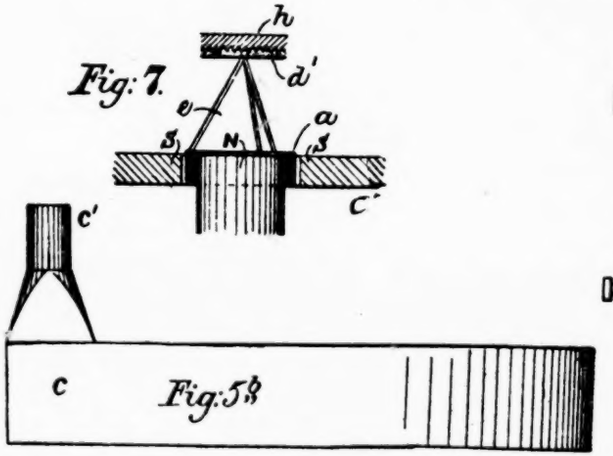

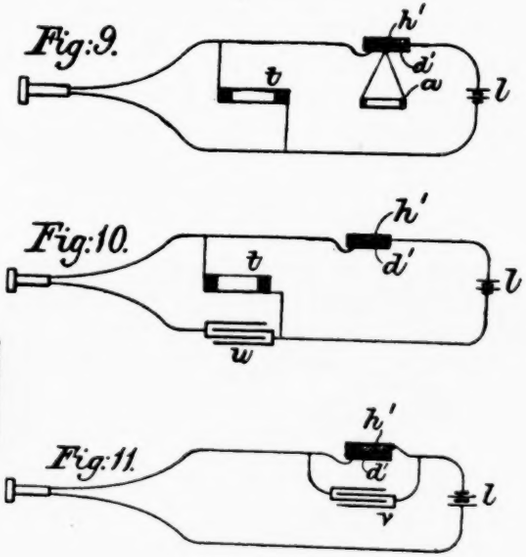

Fig:6.

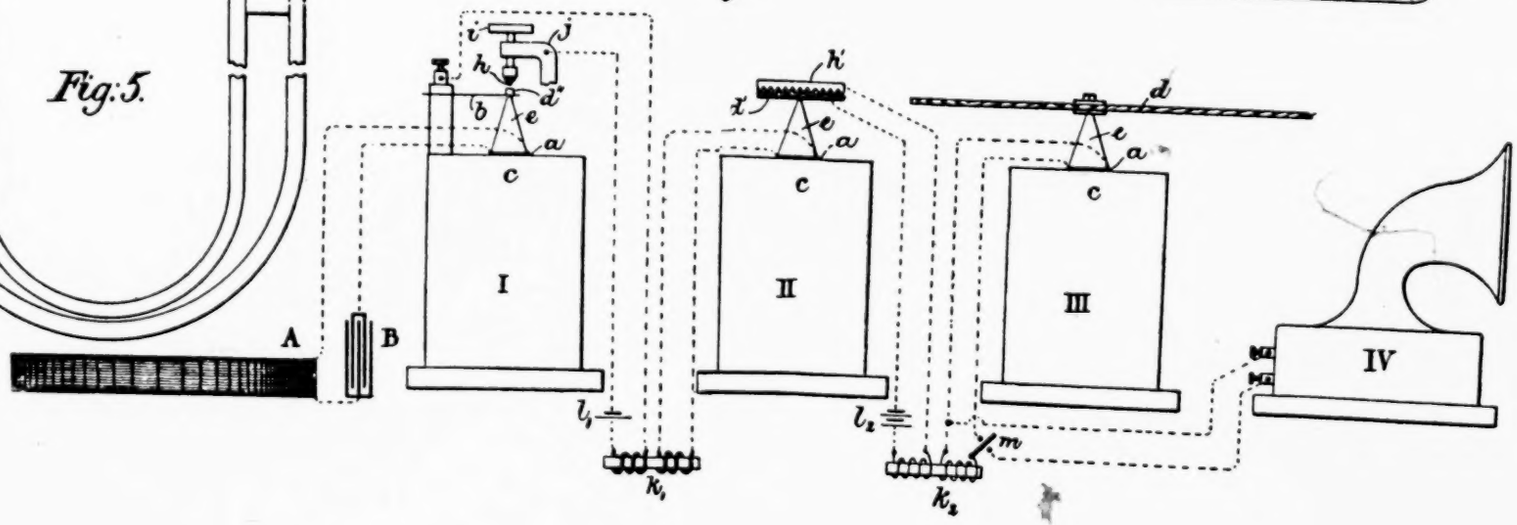

[This Drawing is a reproduction of the Original on a reduced scale.]

or they may be of metallic ribbon when extra low resistance is desired.

Furthermore for the purpose of a "call," a tone-telephone such as a tuning fork or other persistent vibrator mounted on a sound board may be employed as the last of the series of telephone relays, so as to respond powerfully when alternating currents of its own frequency are excited at the distant station.

For the purpose of discriminating between a number of call stations a combination of differently attuned forks or tone-telephones may be arranged instead of one, so that each shall respond strongly only to its own note and thus indicate the particular station which is desiring to signal. The receiving or collecting circuit may likewise in some cases be attuned to a definite note. At the sending end a battery connected to an acoustic arrangement, such as a reed, or a string or other rapid intermitter or reverser of current, may be used to stimulate a circuit containing both capacity and self induction, so that it shall be thrown into strong electro-magnetic vibration.

Dated this 27th day of April 1898.

A. F. Spooner, 323, High Holborn, London, Agent for the Applicant.

Complete Specification

Improvements Relating to Telephones and to Circuit Arrangements and Relays Therefor

I, Oliver Joseph Lodge, F.R.S., D.Sc., of 2, Grove Park, Liverpool, in the County of Lancaster, Professor of Physics in University College, Liverpool, aforesaid, do hereby declare the nature of this invention and in what manner the same is to be performed, to be particularly described and ascertained in and by the following statement:—

The chief objects of my invention are to provide means for the audible detection of extremely feeble fluctuating electric currents, such for instance as may be caused in a closed, or practically closed, circuit, by another very distant circuit supplied with alternating currents; to magnify the telephonic effect of feeble currents by successive specially-designed relays until the sound is sufficient to act as a "call" summoning the operator to attend to receive the

message; to magnify the telephonic effect of speech so that conversation transmitted round one circuit may be heard inductively in a different circuit provided with proper instruments; and generally to improve the conditions under which telephony is carried on so as to magnify every fluctuation of current and thus produce a loud sound from a feeble stimulus for any useful purpose.

For the purpose of detecting or manifesting any feeble alternating or intermittent current, whether excited microphonically or inductively or otherwise, I construct a special kind of telephone or relay, the main features of which are depicted in the annexed drawings. It consists of a coil of insulated wire or metal ribbon a supported freely by an elastic spring b (Figure 3) or by one prong of a tuning fork b^1 (Figure 2) in a strong magnetic field produced by an electromagnet or permanent magnet c of which one pole c^1 is inside the coil while the other pole or keeper c^{11} is outside and surrounding it. The coil is constructed of light materials well cemented or fixed together so as to move as a rigid body, and whenever an alternating current passes round it, it is thrown into bodily vibration, and transmits [fol. 314] these vibrations mechanically to whatever is connected to it. The said coil may be attached in any light and rigid manner to a sound board d (Figure 1) or to the diaphragm d^1 (Figure 7) of a microphonic transmitter, or it may carry a piece of graphite, carbon, or other suitable substance d^{11} (Figures 2 and 3) so that the sound board, the diaphragm, or the carbon, receive the mechanical vibrations.

The object of transmitting the vibrations to the sound board d is to make them directly audible. The object of transmitting them to the microphonic carbon granules or pellet is to actuate a kind of microphonic relay which by throwing into intermittent action the current from a local battery shall greatly magnify the intensity of the originally received disturbance.

The sound-board receiver is depicted in Figure 1, where e is a thin aluminium or other light cone or tripod connecting the vibrating coil a rigidly to the sound board d, which may be of large size and may have a number of similar coils attached to it in various parts. For instance it might form the ceiling or wall of a public hall; and the alternating current originally received by the several coils would in that case be caused by the voice of a speaker directed

towards any form of microphonic transmitter capable of distinct articulation.

In the case of Figure 1 the sound board d, or in the case of Figure 7 the diaphragm d^1, itself constitutes the elastic support of the coil a and dispenses with the necessity of the separate spring such as that shown at b in Figure 3. Only one end of the keeper c^{11} is shown in Figures 1 and 2; the side of it is indicated in Figure 3, and it continues to the other pole of the magnet which it similarly surrounds as shown in Figures 5^a and 5^c. In all these figures, the keeper is supported rigidly from the pole by means of a brass collar and plate f.

A form of magnet is shown in Figure 4 (which represents a plan and elevation respectively) where the keeper c^{11} is a round plate of soft iron pierced with holes for the reception of four poles like c^1 and where c_6 is a bundle of hard steel magnets, joined to the four rods c^1 by an iron base plate c_3. Or else, as an alternative arrangement, the whole is of soft iron and the space g surrounding the central shaft is filled with wire, constituting it an electromagnet. Thus a magnet with four pole pieces like c^1 and four annular air gaps or inter pole spaces a^x to receive four vibrating coils such as a shown in the other figures is produced.

Figures 5 and 5^a illustrate in plan; Figure 5^b in side elevation; and Figure 5^c in vertical section, an alternative form of steel magnet and its keeper. The magnet is one of ordinary horseshoe shape with two poles c and soft iron pole pieces c^1 surrounded by a soft iron keeper c^{11} attached rigidly by the brass collar-plate f to the pole pieces.

The coil a instead of being attached to a metal diaphragm held near the ear, or to a sound board as described, may in the first instance be mechanically attached to the diaphragm of a granular microphone as shown in Figure 7 or to some other microphonic arrangement fed by a local battery and having in its circuit (through a transformer or otherwise) another telephone as shown in Figure 6, which may be either of any usual pattern or of the above described new pattern with vibrating coil. This second movable or trembling coil may thus actuate by mechanical means another microphone which, through the energy of its relay battery, may powerfully disturb a third telephone,

and this again if necessary a fourth and so on. The whole arrangement is depicted in Figure 6; where the concluding telephone of the series is indicated in two alternative forms either of which may be switched on by the switch m. By this means any required degree of magnification can be obtained, for I find that a coil thus moving as a whole in a magnetic field (otherwise maintained) is very suitable for communicating its tremors to a microphone-transmitter whether of special or of any customary form; being much more effective for this purpose than the ordinary iron diaphragm receiver which vibrates in parts and is under considerable constraint. The final instrument of the series is usually a loud speaking iron disc or diaphragm telephone of some ordinary pattern suitable for imparting vibrations to the air and so on to the ear; or it may be an electro-[fol. 315] dynamometer or a Langdon-Davis phonophoric receiver, or other instrument, for example, that shown in Figure 8, whereby the vibrations are enabled through a relay to work Morse or other telegraph instruments.

I may use this plan of magnification as a call, or as a receiver in magnetic telegraphy, but it is obviously applicable to other useful purposes such as magnifying a speaker's voice by distributing it to various parts of a large hall.

The main features of the microphonic relay or magnifying telephone are shown in detail in Figures 2 and 3, where the vibrating carbon d^{11} is in light contact (it is shown separated in the figures for clearness) with another piece of carbon or other electric conductor h which is firmly held and adjusted by a thumb screw i working in a suitable support j. It is to be understood that the support j and the spring b or the prong of the tuning fork b^1 are to be connected to a local battery circuit which shall also be connected either directly or through a transformer with the coil of another second receiving telephone. This second telephone thus supplied with intermittent or alternating currents of magnified intensity may be a telephone of ordinary pattern, or it may be a vibratory coil telephone like Figure 1, or it may be another relay telephone like Figures 2 and 3 or like Figure 7 which then in turn magnifies further and operates another telephone, and so on.

Figure 6 serves to show the connexions for such a series of magnifying telephones, or telephone relays. In that

figure the coil and condenser indicated at A B represents subject matter described in the Specification of another Application for Letters Patent filed by me and numbered 29,505 dated 13 December 1897, though it may be replaced by any other transmitting or collecting apparatus; for instance this original current fluctuator might be an ordinary microphonic transmitter operated by the voice. The Roman numerals I, II, III and IV represent a possible arrangement of the receiving and magnifying apparatus. No. I is a relay telephone like Figure 2 or Figure 3 with a vibratory coil varying the microphonic contact of the carbons d^{11} and h, one of them being supported by the spring b. No. II is another relay telephone like Figure 7 adapted to stronger currents, with its vibratory coil varying the microphonic contacts in a granular transmitter with its thin carbon diaphragm d^1 and carbon base h^1. No. III is a loud-speaking telephone consisting of a vibratory coil and sound board, like Figure 1. No. IV represents another form of loud-speaking telephone, alternative to the last, where a vibratory diaphragm disturbs the outer air through a concentrating funnel. The magnet in Nos. I, II and III is supposed to be an electromagnet shaped like Figure 4, but with only a single air gap surrounding the central shaft C_0 which is wound with a magnetizing helix and surrounded by an outer iron cylinder instead of the four rods c^1 of that figure. The magnet of No. IV is supposed to be more like the horseshoe pattern of Figures 5 to 5^c; or it may be any known form of loud-speaking telephone. Electrical connection between I and II and between II and III is effected by means of the transformers k_1 and k_2; l_1 and l_2 are the local batteries, of which l_2 is permissibly stronger than l_1, because of the many contacts in the granular microphone d^1 h^1. Instead however of the speaking telephone No. III a modification called a "call telephone" may be employed. The design of this is depicted in Figure 8 where the coil, suspended as before in a field due to the magnet c by the rigid light connector e, operates the limb of a spring or of a tuning fork b^1 clamped to the pillar n and carrying an adjustable counter-poise o for the purpose of equalizing the load on both prongs, and also permitting a slight range of tuning. The studs p and q are platinum, lightly in contact, the upper one q being held by the thin spring r and adjusted by the thumb screw i. The pillar j supporting this spring is insulated, as for in-

stance by the ebonite s, and thus n and j can be connected to a local battery circuit containing an ordinary relay the tongue of which is just held over by the current across the junction p, q so long as that junction is undisturbed. But directly the fork trembles, the contact between p and q is practically broken or greatly enfeebled, by the dancing of the light spring r on the heavier spring b^1, and accordingly [fol. 316] the tongue of the relay in circuit with p, q (that is with n, j) mover over and completes the circuit of an ordinary electric bell or it may work a Morse instrument.

For the purpose of discriminating between a number of "call" stations a combination of differently attuned forks or tone telephones may be arranged, instead of one, so that each shall respond strongly only to its own note and thus indicate the particular station which is desiring to signal. The receiving or collecting circuit may likewise be attuned to a definite note, as detailed in the specification of my said prior application.

Whether the spring b or the tuning fork b^1 is employed as the elastic support for the coil in any case is optional, but whenever precision of tuning is desired, so that the receiver shall respond to one particular frequency of distant impulses and not to others, I prefer the tuning fork; and in that case it would be preferable to make Nos. I, II and III of Figure 6 all tuning-fork telephones. But where many notes, or where speech is desired to be received and magnified, then either a spring or a diaphragm or some other elastic support can be used. Further I find that a microphonic receiver, I shunt the latter out by a self-induction or ing through it; so whenever the receiving telephone is of too high resistance to permit this strength of current to flow in simple circuit with it I shunt the telephone by means of a low resistance self-induction or choking coil which conducts the main part of the steady current but diverts the variations of current through the telephone. On a long line a transformer is the natural mode of achieving this object but on a short or purely local line I find the choke shunt preferable.

To enable a fairly strong current to be sent through a microphonic transmitter without over-disturbing a telephonic receiver, I shunt the latter out by a self-induction or choke coil t, as indicated in Figure 9, where the transmitter h^1 is shown operated by one of the vibrating coils a as in

Figure 7 but its telephonic receiver is shunted by the coil t, whereby the steady current is mostly conveyed, while its rapid fluctuations mostly go through the telephone. To assist the fluctuation to go through the telephone, I place a condenser u in series with it as shown in Figure 10. This has the effect of strengthening oscillations of some particular frequency in especial, and of all frequencies not too far removed from that.

It is to be understood that the microphone transmitter may be worked by the voice or by any other usual arrangement, and is not limited to the disturbance by attached coils.

Whenever a temporarily inoperative microphone is in circuit with a telephone (as for instance the ordinary transmitter belonging to a local receiver during the reception of a distant message), an accidental noise, a grating or hissing, is usually going on in the telephone. This can be diminished by shunting the telephone with a condenser v, as indicated in Figure 11, an arrangement which is advantageous in some forms of ordinary voice telephones, as it diminishes the disturbing noise from the local transmitter while the desired message from a distant transmitter is being listened to.

This and the other methods mentioned, though specially applicable to such pure-tone-telephony as is appropriate for Morse signals, can also be used with speech-telephony under certain conditions.

Having now particularly described and ascertained the nature of my said invention and in what manner the same is to be performed, I declare that what I claim is:

1. A telephone having a coil freely supported in a magnetic field upon an elastic spring or its equivalent substantially as and for the purposes set forth.

2. In a telephone, the combination of a coil freely supported upon an elastic spring or its equivalent with a magnet one pole of which is inside the coil while the other pole is outside and surrounding it substantially as and for the purposes set forth.

3. The method, substantially as set forth, of attaining forcible mechanical or acoustic vibrations from fluctuating electric currents by a telephone consisting of an elastically [fol. 317] suspended movable coil, suspended in an annular

or other suitable magnetic field, and connected with a sound board, or its equivalent.

4. The method, substantially as set forth, of magnifying feeble mechanical vibrations electrically received by means of a vibrating coil so arranged as to operate a microphone or microphonic transmitter whose current serves to work another telephone.

5. The combination of a series of telephones and microphones connected alternately electrically and mechanically, so that each telephone receives a disturbance electrically from the preceding microphone and passes it on mechanically in magnified intensity to the next microphone, while each microphone receives a disturbance mechanically from the preceding telephone (or in the case of the first of the series possibly from the voice direct) and passes it on electrically to the next telephone of the series.

6. The microphonic relay or magnifying telephone constructed substantially as described with reference to Figures 2 and 3 of the accompanying drawings.

7. A magnet with one or more inter pole spaces each containing a suspended coil of wire arranged to receive fluctuating currents and thereby to be thrown into vibration substantially as described with reference to Figure 4, or to Figures 5, 5^a, 5^b, and 5^c of the accompanying drawings.

8. As a telephonic "call," a light metallic contact in a local relay circuit arranged so that it dances on an elastic vibrator and thereby changes in electrical resistance when the vibrator is excited by means of fluctuating currents sent round an attached coil suspended in a magnetic field substantially as described with reference to Figure 8 of the accompanying drawings.

9. In a telephonic arrangement, the combination of a magnet, a mechanically vibrating coil surrounding one of its poles, a microphone, and a telephone or its equivalent substantially as and for the purposes set forth.

10. In combination, a tuning-fork or reed and a vibrating coil substantially as and for the purposes set forth.

11. In combination, a tuning fork or reed, a vibrating coil and a loose contact attached to the tuning fork for the purpose of operating a relay and so furnishing a "call" substantially as set forth.

12. In a telephonic circuit the choke coil t substantially as and for the purpose set forth.

). 1899. May 4. N:: 9418.
)HI'S Complete Specification.

FIG. 2.

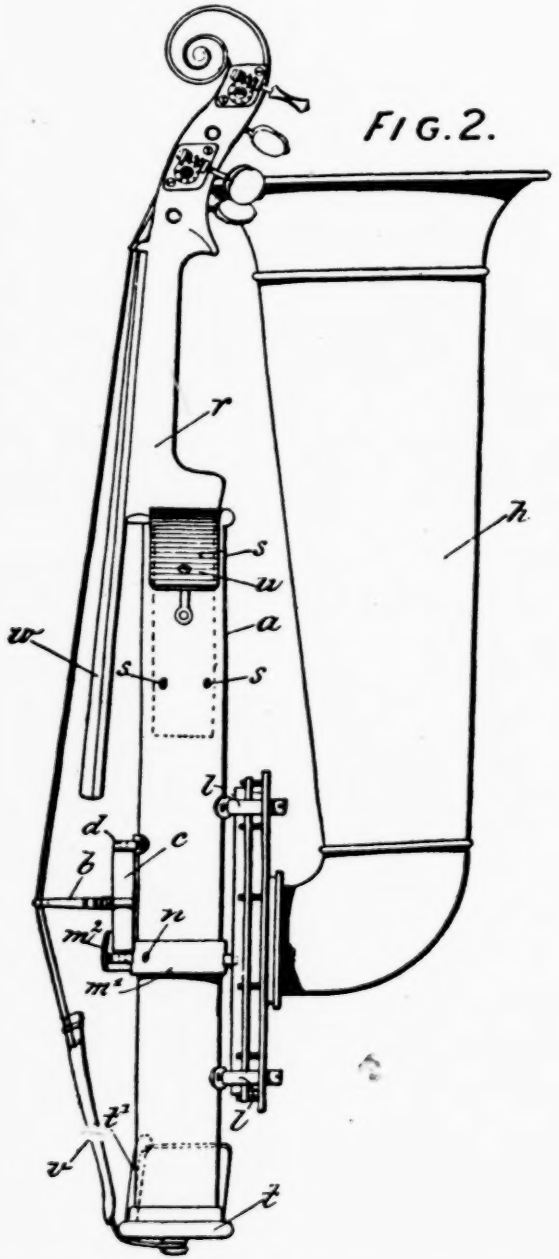

FIG. 4.

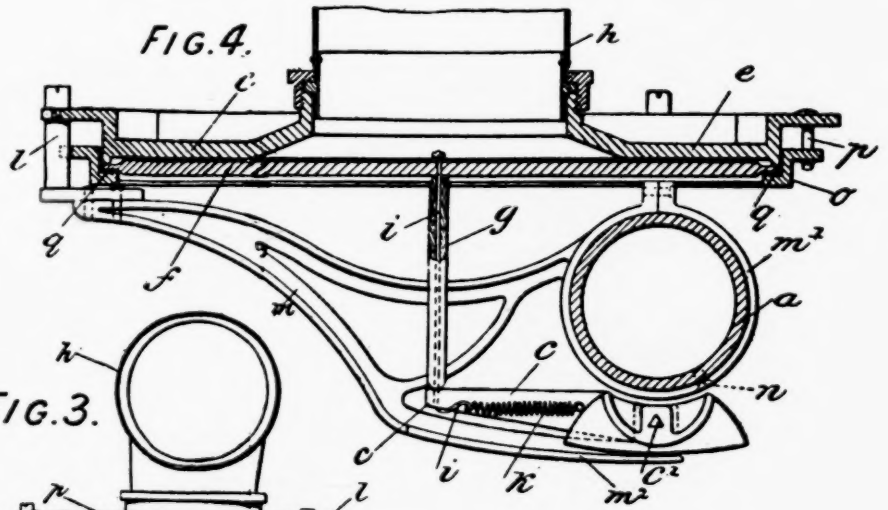

FIG. 3.

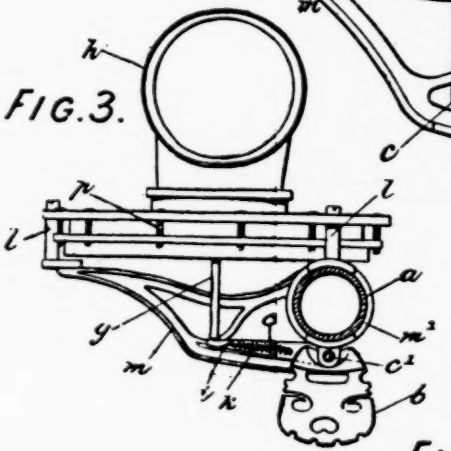

FIG. 5.

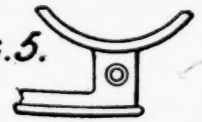

FIG. 6.

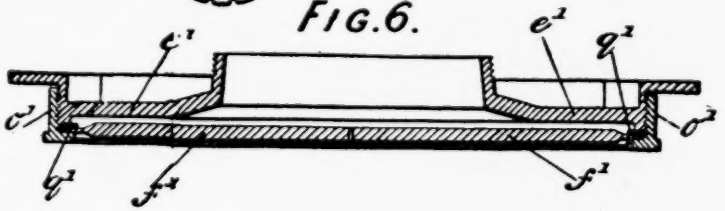

FIG. 7.

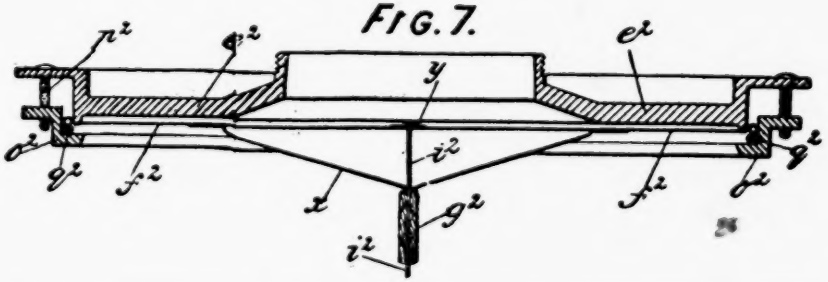

[This Drawing is a reproduction of the Original on a reduced scale.]

A.D. 1899. MAY 4. N° 9418.
STROH'S COMPLETE SPECIFICATION.

3 SHEETS; SHEET 1

FIG. 1.

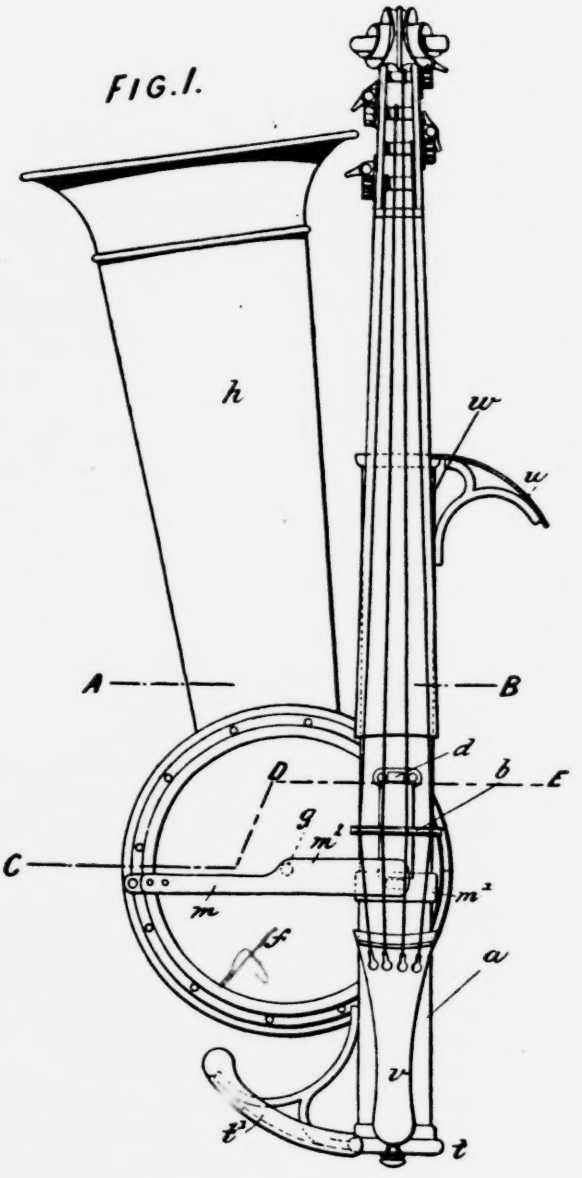

[This Drawing is a reproduction of the Original on a reduced scale]

A.D. 1899. MAY 4. N° 9418.
STROH'S COMPLETE SPECIFICATION.

(3 SHEETS)
SHEET 3

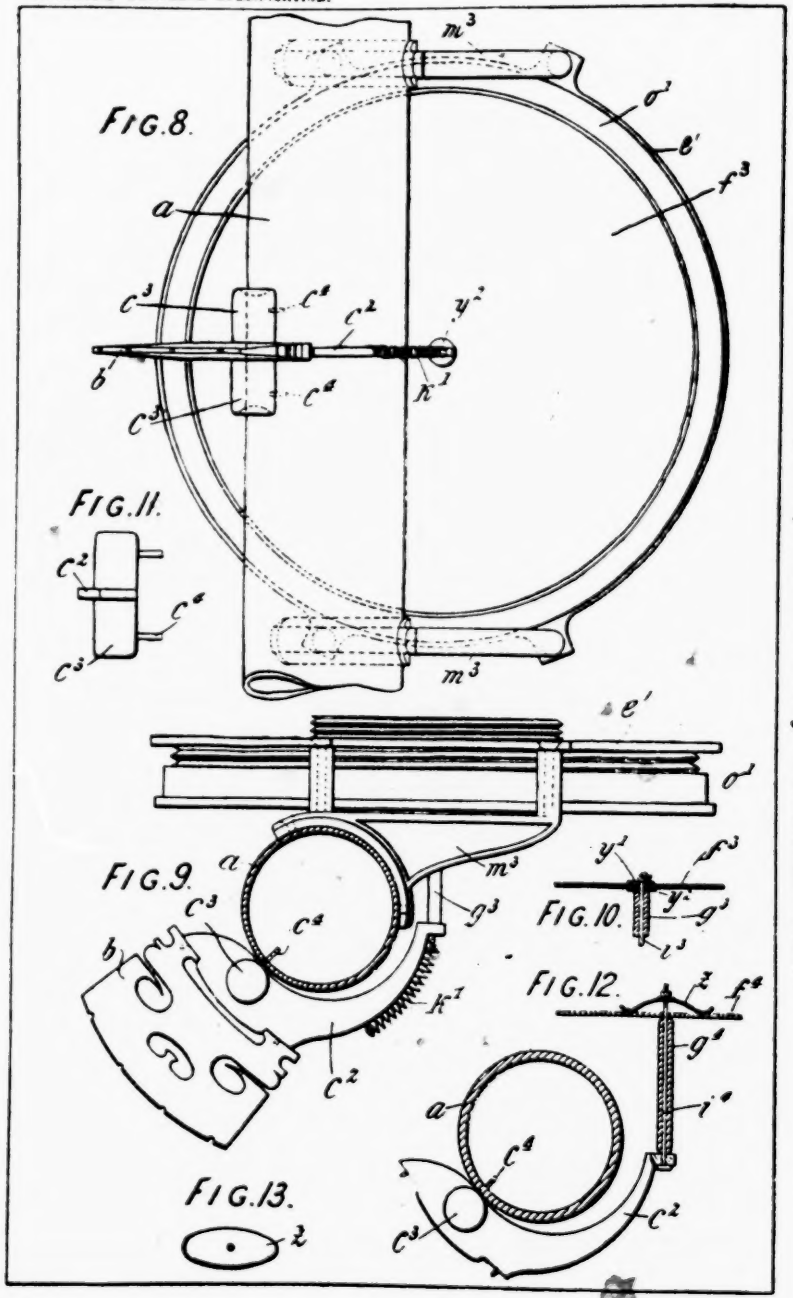

[This Drawing is a reproduction of the Original on a reduced scale.

13. In a telephonic circuit the condenser v substantially as and for the purpose set forth.

14. The combination, in a telephonic circuit, of the choke coil t and the condenser u substantially as and for the purpose set forth.

Dated this 13th day of December 1898.

A. F. Spooner, 323, High Holborn, London, Agent for the Applicant.

Redhill: Printed for Her Majesty's Stationery Office, by Malcomson & Co., Ltd.—1899.

(Here follow drawings, side folios 318, 319, 320)

[fol. 321] The circular frame or drum-head which *the* holds the edges of the circular diaphragm, and the distributing cone, are preferably made of aluminium.

Dated this 3rd day of April 1899.

Fairfax & Wetter, Agents for the Applicant

Complete Specification

Improvements in Violins and Other Stringed Instruments

I, John Matthias Augustus Stroh, Electrical Engineer, of 98, Haverstock Hill, in the County of London, do hereby declare the nature of this invention and in what manner the same is to be performed to be particularly described and ascertained in and by the following statement:

This invention relates primarily to a violin, which has a diaphragm or membrane and a resonator, instead of the ordinary violin body or sounding board, but is applicable also to other stringed instruments.

In the accompanying drawings:

Fig. 1 is a front view of a violin embodying my invention; Fig. 2 is a side view of the same; Fig. 3 is a sectional plan along line A—B of Fig. 1; Fig. 4 and 5 represent details of construction on a larger scale, Fig. 4 being a sectional plan along broken line C—D—E of Fig. 1; and Figs. 6 and 7 are horizontal sections representing modifications.

The strings, together with the bridge, finger board, head, neck, and tail piece of the violin are mounted on a suitable tubular body portion a, made of aluminium wood or other

suitable material, preferably in the shape of a tube of circular or square section.

The bridge b is not directly attached to the said tubular body portion, but rests on a transverse rocking lever c adapted to turn on knife edges c^1, the bearings d of which are rigidly fixed to the tubular body portion a, or the bridge and the rocking lever may be made of one piece.

Underneath the frame a and rigidly attached thereto is a circular frame or drumhead containing a diaphragm of wood, glass or other rigid material, or a stretched membrane of parchment or other flexible material.

Fig 4 shows an example of a drumhead e with wooden diaphragm f. Fig. 6 another example, and Fig. 7 shows an example of a drumhead with a membrane f^2 of parchment. Fig. 5 is an end view of one of the knife edge bearings belonging to Fig. 4.

The centre of the diaphragm or membrane is mechanically connected with one end of the rocking lever c by means of a link or other suitable transmitting device, so that the vibration of the violin strings, when bowed, will be finally transmitted to the diaphragm f. The latter may be open to view on one side, while the other is enclosed by a cover or drumhead e having in the centre an opening, against which is attached a resonator or tube h, to augment and distribute the sounds emitted by the diaphragm, in other words to receive and distribute the waves of air caused by the mechanical vibrations of the diaphragm.

The said resonator has preferably the shape of a trumpet as shown, but other suitable forms of resonators may be adopted.

The connection between the long arm of the rocking lever c and the diaphragm may be made in various ways, but I prefer to adopt the arrangement represented by Fig. 4 of the drawings; that is to say, the extremity of the rocking lever c is placed axially above the centre of the dia- [fol. 322] phragm f, and the transmitting device mentioned above has the shape of a tubular rod or link g rounded at the ends, one end abutting against the centre of the diaphragm and the other end against the rocking lever c. A piece of gut i or other suitable cord passes through the centre of the diaphragm, through the link and perforated extremity of the rocking lever, and is attached at one end to the said lever, through the intermediary of a helical spring

k, while the other end is secured to the diaphragm by means of a knot The sprink k is so adjusted, as to keep the cord i always at the required tension, and to prevent any slackness between the rocking lever and the diaphragm.

In the construction represented by Figs. 3 and 4, the drumhead e is mounted on three screw studs l distributed over its circumference; two of these studs being attached directly to the tubular body portion a, while the third is attached to a long arm or open frame m forming at one end a clamping ring m^1 which encircles the frame a and is fixed to the same by a screw n. As shown by Figs. 1 and 4, the open frame m extends above the rocking lever c and has a flange m^2, which covers and protects the said lever, together with spring k and the upper end of the cord i. The edge of the diaphragm f is enclosed by a flanged ring or lid o attached to the drumhead e and rendered adjustable by means of screws p. The edge of the drumhead or disc e which faces the diaphragm f has a projecting rim adapted to support the edge of the diaphragm, which is held between the said rim and an india-rubber packing ring q resting on the flange of the lid o. The wooden diaphragm is preferably reduced in thickness at the edge, as shown.

The tubular body portion a (Figs. 1 and 2) is provided at one end with a hand rest u and connected with the neck r of the violin, which extends into the tube or frame a and is fixed by screws s, while the other end of the frame is closed by a cap t connected with the tail piece v in the usual way and provided on one side with a chin rest t^1; w is an ordinary finger board.

In the modification represented by Fig. 6 the flanged cover or ring o^1 is connected with the drumhead e^1 by a screw joint, instead of having screw studs distributed on its circumference.

In the modification represented by Fig. 7, the vibrations are transmitted from the tubular link g^2 to a flexible membrane f^2 through the intermediary of a distributing cone r, instead of passing directly into the membrane, the said stay g^2 being made shorter and resting with its lower end upon the apex of the cone while the cord i^2 passes through the apex of the cone and through the membrane

The rocking lever, as well as the body portion a, the drumhead e, cover o, distributing cone and supporting arm

m are preferably made of aluminium or of any other suitable material.

If a bow be drawn across the strings, the vibrations of the latter will cause the bridge, together with the rocking lever, to oscillate on the knife edges, and the oscillations of the lever will be transmitted through the link to the diaphragm.

The top of the bridge is therefore an arc of a circle having its centre in the axis of oscillation formed by the knife edges, and the bridge is either made of one piece with the rocking lever, or so connected with same, that all vibrations transverse to the strings will be transmitted to the lever.

The construction represented by Figs. 8 and 9 differs from that represented by Figs. 1 and 2 principally by the shape of the rocking lever c^2 and the arrangement of the diaphragm and resonator.

The rocking lever, instead of being mounted on a pair of knife edge bearings, has a pair of pins c^4 fixed by the hub c^3 (Fig. 11) and passing radially through a pair of perforations in the tubular body a, as shown by Fig. 9.

The lever c^2 is curved, so as to follow the curvature of the body a and to bring the link or stay g^3 nearer to the circumference of the body a.

One end of the transmitting cord i^3 (Figs. 9 and 10) passing through the tubular stay g^3 is attached to the lever c^2 [fol. 323] through the intermediary of a helical spring k^1 while on the other end are mounted a pair of washers y^1 and y^2 holding the diaphragm f^3 between them (Fig. 10)

The edge of the diaphragm is held between the drum-head e^1 and the screw-threaded ring o^1 The drum-head is attached to a pair of brackets m^2 mounted on the tubular body a. The resonator is not shown in the drawing.

The rocking lever c^2 is held against the body a by the pressure of the violin strings acting on the bridge b, and the orifices for the pins c^4 are sufficiently large to allow the necessary rocking motion of the lever c^2.

In the modification represented by Fig. 12, the rocking lever c^2 is connected with the diaphragm f^4 by means of a pin i^4 provided at one end with a bolt-head and at the other with a screw-nut resting on a bent leaf-spring z (Figs. 12 and 13) which abuts against the diaphragm.

It will be understood, that the examples shown by the drawings represent special forms only of my invention, that

the shape and arrangement of parts may be modified, without departing from my invention. My improvements are applicable also to violoncellos, mandolins, guitars and other stringed instruments.

Having now particularly described and ascertained the nature of the said invention and in what manner the same is to be performed, I declare that what I claim is:—

1. A stringed musical instrument, comprising in its construction a bridge supporting the strings, a rocking lever connected with the said bridge and supporting the same, a diaphragm held and supported at the edges and adapted to oscillate in the centre, a transmitting device situated between the extremity of the rocking lever and the diaphragm and adapted to transmit oscillations from the said lever to the diaphragm, a resonator situated in proximity to the diaphragm and adapted to receive and distribute the waves of air caused by the vibrations of the diaphragm, and a body portion adapted to support the rocking lever, diaphragm and resonator, and to connect these parts with the parts holding the ends of the strings, substantially as described.

2. In a stringed musical instrument, in which the bridge supporting the strings is mounted on a rocking lever and the vibrations of the latter are transmitted to a diaphragm, the combination of the rocking lever and the diaphragm, with a link interposed between the extremity of the rocking lever and the diaphragm, and a flexible cord or a wire attached at one end to the said rocking lever and at the other end to the diaphragm, substantially as described.

3. In a stringed musical instrument, in which the bridge supporting the strings is mounted on a rocking lever and the vibrations of the latter are transmitted to a diaphragm, the combination of the rocking lever and the diaphragm, with a tubular link interposed between the extremity of the rocking lever and the diaphragm, and a flexible cord or wire passing through the said tube, one end of the said cord or wire being attached to the rocking lever and the other to the diaphragm, substantially as described.

4. In a stringed musical instrument, in which the bridge supporting the strings is mounted on a rocking lever and the vibrations of the latter are transmitted to the diaphragm, the combination of the rocking lever and the dia-

phragm, with a stay interposed between the same, so as to transmit vibrations, a connecting link or cord connected at one end with the centre of the diaphragm, and at the other end with the rocking lever, and a spring interposed between the rocking lever and the connecting link, or between the latter and the diaphragm, substantially as described.

5. In a stringed musical instrument in which the bridge supporting the strings is mounted on a rocking lever and the vibrations of the latter are transmitted to a diaphragm, a rocking lever turning on knife edges, substantially as described.

6. In a stringed musical instrument, in which the bridge supporting the strings is mounted on a rocking lever and the vibrations of the same are transmitted to a diaphragm, [fol. 324] a circular diaphragm held and supported at the edge and connected in the centre with the said rocking lever, substantially as described.

7. In a stringed musical instrument in which the bridge supporting the strings is mounted on a rocking lever and the vibrations of the latter are transmitted to a diaphragm, the combination of the said diaphragm with a trumpet-shaped resonator adapted to receive and distribute the sound waves produced by the vibrations of the diaphragm, substantially as described.

8. A stringed musical instrument constructed and adapted to operate substantially as described and illustrated by the drawings, Figs. 1 to 13.

Dated this 31st day of January 1900.

Fairfax & Wetter, Agents, 37 and 39, Essex Street, Strand, London.

Redhill: Printed for Her Majesty's Stationery Office, by Malcomson & Co., Ltd.—1900.

(Here follows drawing, side folio 325)

[fol. 326] Complete Specification

Improvement in the Diaphragms of Phonographs, Musical Instruments, and analogous Sound-producing Recording or Transmitting Contrivances.

I, John Matthias Augustus Stroh, Electrical Engineer, of 98, Haverstock Hill in the County of London, do hereby

A.D. 1901. Feb. 16. N° 3393.
STROH'S Provisional Specification.

1 SHEET

Fig 1

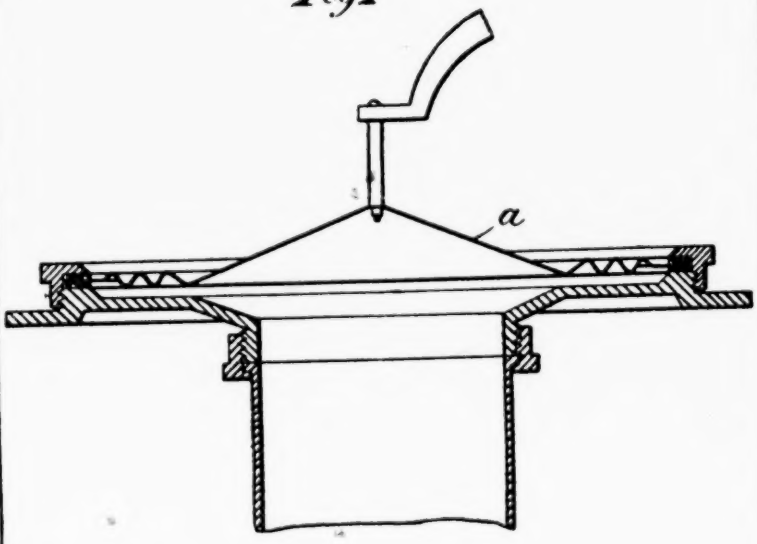

Fig 2.

Fig 3.

[This Drawing is a reproduction of the Original on a reduced scale]

declare the nature of this invention and in what manner the same is to be performed, to be particularly described and ascertained in and by the following statement:—

The diaphragms of phonographs, graphophones, and analogous sound-producing or transmitting instruments are usually made in the shape of a flat circular disc which is supported at its edges and free to vibrate in the centre.

If such a diaphragm is set in motion by means of a solid body acting on the centre, the amplitude of the vibrations is a maximum in the centre and gradually diminishes towards the circumference, and the waves of air produced by such a diaphragm differ therefore according to their distance from the axis of the diaphragm.

The present invention has for its object, to increase the efficiency and uniformity of the vibrations, and thereby to increase the quality of the sounds, or the accuracy of their reproduction. For this purpose I make the centre of the diaphragm rigid by giving it the shape of a cone having its apex at the point where vibrations are imparted to the diaphragm or transmitted by the same, while the annular portion between the base of the cone and the edge of the diaphragm may be flat or corrugated, the number and depth of the corrugations depending on the nature of the diaphragm and on the effect desired. When the vibrations are imparted to the diaphragm from the centre, the conical part will move up and down as a whole, without materially altering its shape, while the corrugated part yields to each movement of the cone, and as the cone occupies preferably about two-thirds of the diameter of the diaphragm, a larger stratum of air will be set in motion, or the vibrations will be more uniform than in the case of a flat diaphgram. The concentric corrugations of the rim facilitate the motion of the cone in the direction of its axis, while preventing or impeding vibrations in any other direction, which accidental or irregular vibrations are supposed to be the cause of impure sounds. The diaphragm may be made of metal, ebonite, celluloid, or other suitable material, and the most suitable thickness should be ascertained by experiments.

This invention is applicable to phonographs, graphophones, and other instruments, in which the production of sound depends upon the vibration of a diaphragm, or where a diaphragm is used for transmitting vibrations of a solid

body to a stratum of air, for instance, in the violins or other stringed instruments described in my Patent Specification No. 9,418 of 1899.

According to the present invention the diaphragms of violins and similar stringed instruments are made conical in the centre and corrugated at the circumference.

In the drawings filed with the Provisional Specification Fig. 1 is an axial section of a diaphragm embodying my invention, as applied to a violin.

Fig. 2 represents a modification, and Fig. 3 another modification.

Having now particularly described and ascertained the nature of my said invention, and in what manner the same is to be performed, I declare that what I claim is:—

1. In phonographs, graphophones and similar sound-[fol. 327] recording or reproducing instruments, a diaphragm which is conical in the centre and flat or corrugated at the circumference, substantially as described and for the purpose specified.

2. In musical instruments of the violin class, having a sound-producing diaphragm adapted to receive mechanical vibrations in the centre and to communicate them to a stratum of air, the improved shape of the diaphragm, substantially as described and for the purpose specified.

Dated this 6th day of November 1901.

Fairfax & Wetter, Patent Agents, 37 & 39, Essex Street, Strand, London.

Redhill: Printed for His Majesty's Stationery Office, by Malcomson & Co., Ltd.—1901.

(Here follows drawing, side folio 328)

[fol. 329] [U. S. Library, Patent Office, Sep. 19, 1904]

No. 15,060, A. D. 1904

Date of Application, 5th July, 1904—Accepted, 11th Aug. 1904

Complete Specification

Improvements Relating to Talking Machines

I, Paul Simon, trading as Ernst Holzweissig Nachfolger, of Reichsstrasse 23, Leipzig in the Empire of Germany,

A.D. 1904. JULY 5. N° 15,060.
SIMON'S COMPLETE SPECIFICATION

1 SHEET.

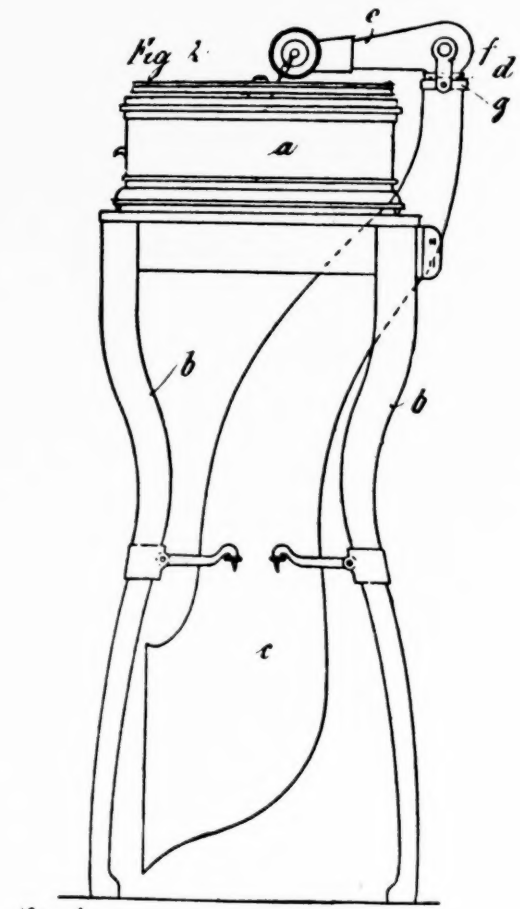

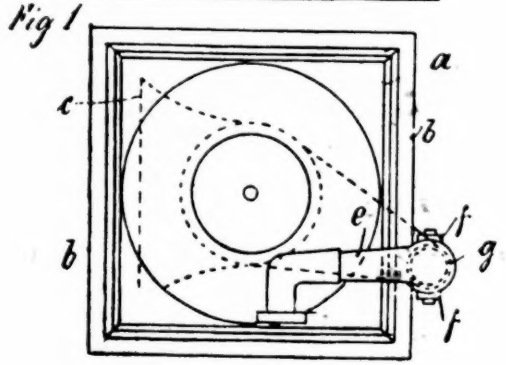

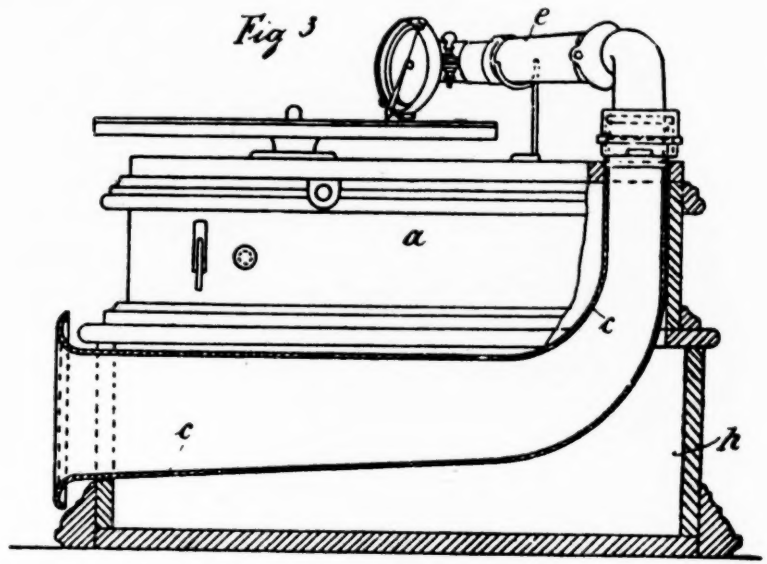

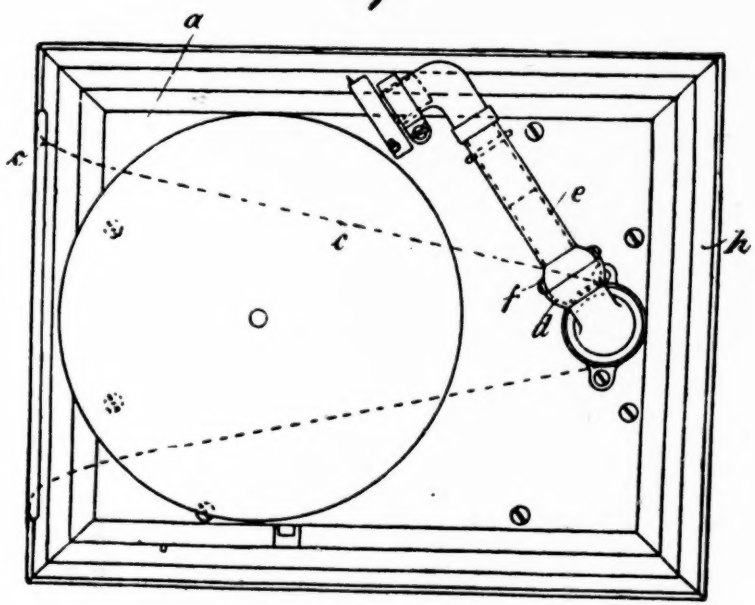

[This Drawing is a reproduction of the Original on a reduced scale]

Manufacturer, do hereby declare the nature of my invention and in what manner the same is to be performed to be particularly described and ascertained in and by the following statement:

This invention relates to phonographs, gramophones, and similar sound reproducing and recording machines, generally known as talking machines.

It is known that in talking machines the reproducing or recording mechanism is so arranged that the trumpet is caused to project either laterally beyond the casing of the apparatus or is directed inwardly over said casing.

Both these arrangements have the disadvantage that the apparatus when in use is very cumbersome, the trumpet particularly being in the way and liable to be knocked, so that the record is frequently damaged by the pin or needle of the sound box.

The object of the invention is to remove these disadvantages.

The main feature of the invention consists in the arrangement of the trumpet below the reproducing or recording mechanism so that it is completely out of the way.

In the annexed drawing two forms of construction of the invention are illustrated.

In the form of construction shown in Fig. 1 in a plan view and Fig. 2 an elevation, the apparatus a is arranged on a table or support b and the trumpet c is so mounted in said table that its mouth is at the lower-part thereof, and within same only the upper narrower part projecting laterally, to a slight extent.

Said upper part of the trumpet c is provided with a circular mouth-piece d in which engages a length of tube e forming a prolongation of the trumpet e and adapted to carry the sound-box.

The tube e is shaped spherically at its end engaging the mouth-piece d so that it is provided with a secure seating therein and a tight connection of both parts is obtained.

On two opposite sides of the spherical portion of the tube e levers f are pivoted, said levers being connected to a loose ring g below the mouth-piece d on the trumpet. By this connection of the tube e and trumpet c it is possible that said tube can move relatively to the trumpet in both vertical

and horizontal directions, at the same time maintaining the necessary tight joint between said two parts.

The tube e can therefore freely follow the movement imparted to the sound box by the record and said tube with the sound box can also be easily placed on and removed from the record.

The form of construction shown in Fig. 3 in sectional elevation, and Fig. 4 in plan is distinguished from the above described construction, by the fact that the trumpet c does not extend vertically downwards for its whole length, but assumes a horizontal direction below the casing a, the latter being placed on a base h closed on three sides and in which the trumpet c is enclosed. The said trumpet is of oval cross-section and its neck which projects through the upper part of the casing a, is bent into a horizontal direction im- [fol. 330] mediately below where it passes through the top of the base h, and terminates at the open side of said base h.

The connection of the trumpet with tube e carrying the sound-box is effected in the manner above described.

The arrangement and form of the trumpet has the advantage that it occupies less space and can be arranged in a comparatively low casing, the whole apparatus being compact, and having the usual appearance; also in both constructions described long trumpets may be used which are of advantage with regard to the tone or sound produced by the apparatus.

Having now particularly described and ascertained the nature of my said invention, I declare that what I claim is:

1. A talking machine in which the trumpet is so mounted in a comparatively high support or table carrying the mechanism that the mouth of said trumpet terminates inside said support near the bottom of the latter, whereas the other narrower end of said trumpet is connected by a spherical joint to a displaceable tubular arm carrying the sound-box substantially as described.

2. A talking machine as described, in which the trumpet of oval cross section is arranged within a base below the mechanism casing in a horizontal direction and terminates with its mouth at the side of said base substantially as described.

Dated this 5th day of July 1904.

Herbert Haddan & Co., Agents to Applicant, 18, Buckingham St., Strand, W. C.

A.D. 1906. APRIL 3. N° 8011.
SZEK & another's COMPLETE SPECIFICATION.

1 SHEET

[This Drawing is a reproduction of the Original on a reduced scale]

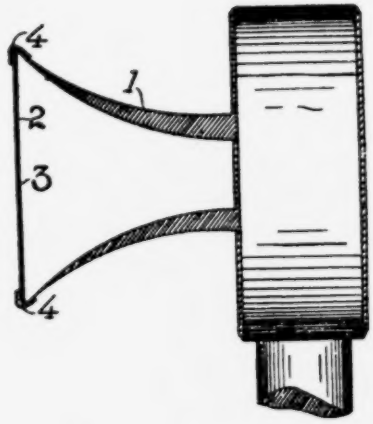

FIG. 1.

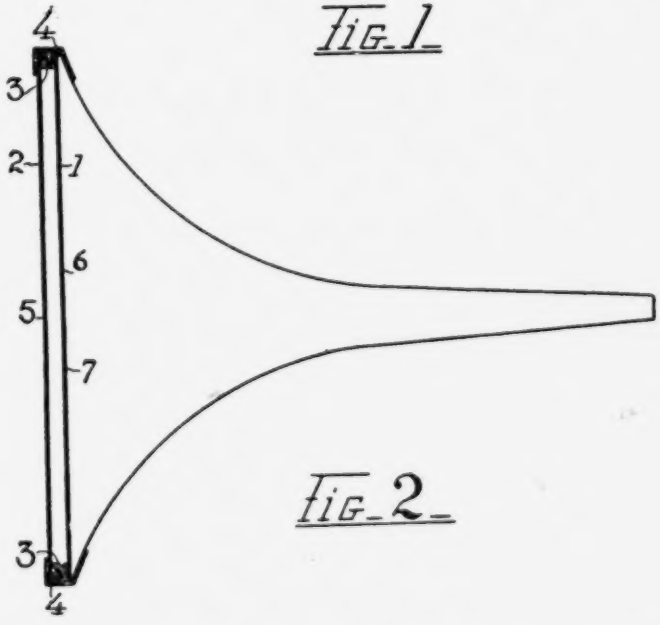

FIG. 2.

Redhill: Printed for His Majesty's Stationery Office, by Love & Malcomson, Ltd.—1904.

(Here follows drawing, side folio 331)

[fol. 332] No. 8011, A. D. 1906

Date of Application, 3rd Apr. 1906

Complete Specification Left, 20th Apr., 1906—Accepted, 28th Mar., 1907

Provisional Specification

Improvements in and Connected with Sound Horns and the Like

We, Joseph Theodore Szek, Manager of the Crater Cement Company, and Georges Schauli, Electrical Engineer, both of 12 New Oxford Street, London W. C. do hereby declare the nature of this invention to be as follows:

The invention relates to improvements in sound horns, trumpets and the like and has for its object the production, registration or reproduction of sounds in a clearer and more natural manner than is at present possible with existing sound horns or reproducers.

The invention is applicable to all sound transmitting, registering, reproducing and like apparatus including telephones, phonographs, gramophones and like apparatus.

The invention consists in placing a plate of suitable thickness and vibratory power, either plain or perforated at the centre or at various places, with round holes or zig-zag perforations that will increase the power of vibration on the passage of sound waves. These plates which can be made of glass, mica, celluloid, sheet metal or other solids capable of vibration, either flat or corrugated or embossed in any desired manner, are placed on, and fastened to, the bell or opening of the horn, trumpet or the like. To further increase the vibrating powers of these plates, they may be mounted on springs, elastic blocks or even on small sound boxes and several such plates may be placed above or beside each other, with a suitable distance between each so as to

form a kind of sound box, or a series of sound boxes at the end of the horn or trumpet.

Dated this 3rd day of April 1906.

Georges Schauli, Joseph Theodor Szek.

Complete Specification

Improvements in and Connected with Sound Horns and the Like

We, Joseph Theodore Szek, Manager of the Crater Cement Company, and Georges Schauli, Electrical Engineer, both of 12 New Oxford Street, London W. C. do hereby declare the nature of this invention and in what manner the same is to be performed, to be particularly described and ascertained in and by the following statement:

This invention which relates to sound horns, trumpets and the like has for its object the transmission, registration and reproduction of sounds in a clearer and more natural manner than is at present possible with existing sound horns or trumpets receivers, transmitters and the like. It [fol. 333] is applicable to all sound transmitting, registering, reproducing and like apparatus, such as telephones, phonographs, gramophones and like devices or machines.

The improvements which form the invention consist in mounting at the mouth of the sound horn or the like a substantially flat plate, or plates, of suitable thickness and vibratory powers, either plain or perforated at the centre, or at various suitable places, with round holes or zig-zag or other perforation these plates being capable of vibration on being impinged upon by sound waves which are thereby rendered more natural in tone. These plates, which can be made of mica, thin glass, celluloid, thin sheet metal or other suitable materials, are made either flat or corrugated or embossed in any desired manner and are fastened to the mouth, or outside opening of the horn, trumpet or the like, this fastening being effected by rings fitting on the mouth or outside opening of the horn or trumpet or by fastening clips or any other suitable device. The method of fastening may be such that these plates may be put on or taken off at will.

To further increase the vibratory power of these plates, they may be mounted on springs or elastic rings, blocks,

A.D. 1907. April 16. No. 8833.
HOUGH'S Complete Specification.

1 SHEET

Fig. 1.

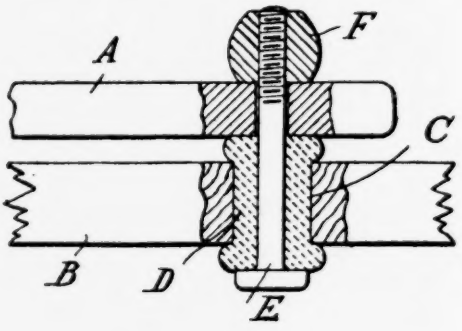

Fig. 2.

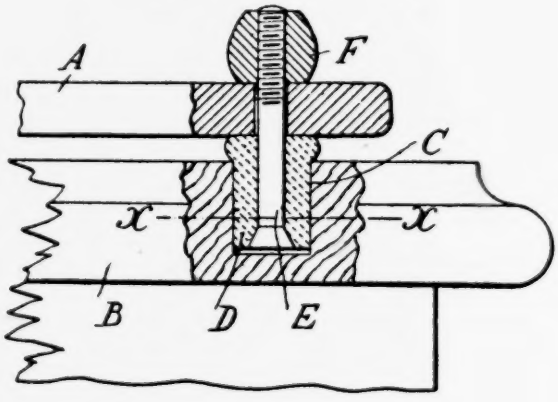

Fig. 3.

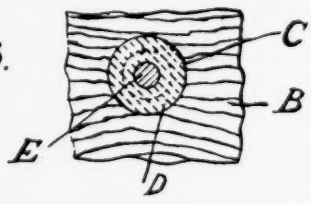

[This Drawing is a reproduction of the Original on a reduced scale.]

small round boxes or the like. Several such plates may be placed above or beside each other, with a suitable distance between each so as to form a kind of sound box or a series of sound boxes at the outer end of the horn or trumpet.

In the case of telephone transmitters or receivers this arrangement has the further advantage of being more sanitary than the existing devices.

In the drawings which illustrate the invention, Fig. 1 shows the invention as applied to a telephone receiver and Fig. 2 as applied to a phonograph or like trumpet.

In Fig. 1 the horn 1 carries the plate 2 with suitable perforations 3, the fastening being effected by a ring 4.

In Fig. 2 two plates 1 and 2 are shown. They are separated by a rubber or other ring 3 and fastened to the trumpet by a ring or clips 4. The plates may be perforated at suitable places such as 5, 6 and 7.

Having now particularly described, and ascertained the nature of our said invention, and in what manner the same is to be performed, we declare that what we claim is:

The combination, with telephone receivers or transmitters or with phonograph, or gramophone sound horns, or the like, of substantially flat plates of glass, mica, celluloid, metals or other suitable materials, these plates being in any suitable manner fastened to the mouth of the horn, trumpet or the like and perforated, corrugated or embossed as may be desired, substantially as described.

Dated this 20th day of April 1906.

Joseph Theodor Szek, Georges Schauli.

Redhill: Printed for His Majesty's Stationery Office, by Love & Malcomson, Ltd.—1907.

(Here follows drawing, side folio 334)

[fol. 335] No. 8833, A. D. 1907

Date of Application, 16th Apr., 1907—Accepted, 26th Sept., 1907

Complete Specification

"Improvements in the Mounting of Phonographs and like Machines"

I, James Edward Hough, Manager of the Edison-Bell Consolidated Phonograph Company Limited of 39 Charing

Cross Road, London, do hereby declare the nature of this invention and in what manner the same is to be performed, to be particularly described and ascertained in and by the following statement:

When mounting a phonograph or like machine on a box or casing it has been customary to insert a rubber or like washer between the metal base and the top of the box or casing, the parts being held in position by screws, and it has also been proposed to partially surround the screws with rubber both for phonographs and for other purposes, and where such rubber is expanded by compression in a closed space it assists in holding the parts together, in both cases the object has been to prevent the vibration being transmitted to the box or casing which otherwise gives out sound interfering with that produced from the phonograph record.

Where the screws touch the metal base and also the box or casing it is found that such screws also transmit the vibration notwithstanding the interposed washers and yet it is necessary for winding or carrying purposes that the parts should be securely held in their relative positions.

According to the present invention it is proposed to so connect the parts that the screws or pins will only touch the metal base or the box or casing and not both and to secure the parts in their relative positions by the expansion in a confined space of the rubber or other elastic insulating material employed in a manner somewhat analogous to that employed for stopping bottles with rubber rings between two hard faces brought together by a screw or lever.

In the accompanying drawings are shown two forms which the invention may take;

Figure 1 showing the connecting bolt as passing completely through the box or casing, while

Figure 2 shows it as in a recess therein, and

Figure 3 is a plan view on line x x.

In said drawings A is the metal base on which the phonograph or like machine is mounted. B is the box or casing provided with openings or recesses C adapted to receive the rubber or like packing D when in its unexpanded condition as when resting freely on bolts E.

In Figure 1 the packing or insulating is shown as being longer than the thickness of B so that as nut F is screwed

A.D. 1908 JAN. 18. N° 1194.
CURTEIS' COMPLETE SPECIFICATION.

1 SHEET

[This Drawing is a reproduction of the Original on a reduced scale]

FIG 1

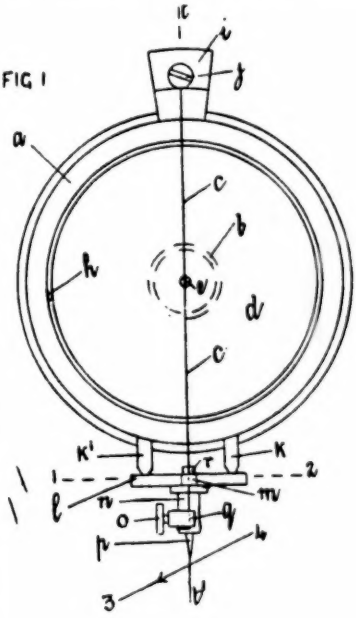

FIG 2

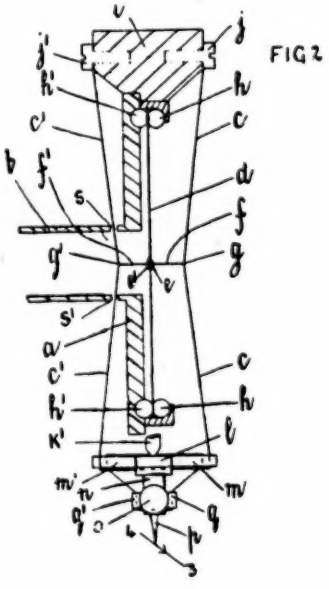

FIG 3

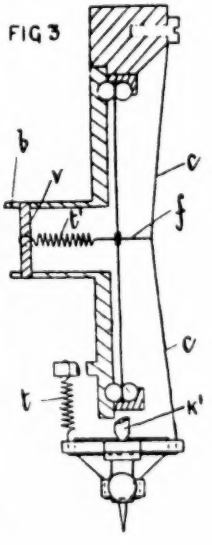

FIG 6

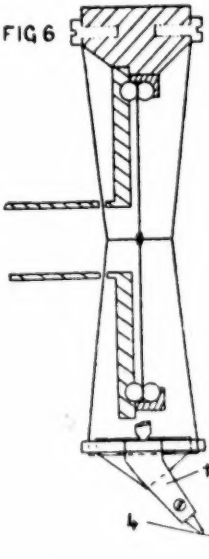

FIG 4

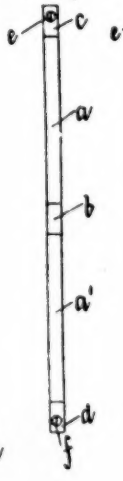

FIG 5

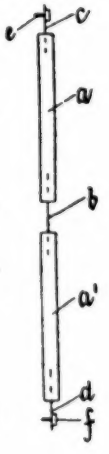

down bolt E, not only is D expanded by compression in opening C but what are practically washers are formed between A and B and between the head of the bolt and B.

In Figure 2 the same result is attained as between A and B while the expansion of D in C is amply sufficient to secure the parts firmly together any drawing up of the bolt E causing its head to cease making contact with B.

It would of course be possible to mould the rubber or like material with one or even with both flanges but by adopting the method described the effect can be attained by simply cutting off sections of tubing adapted to normally just fit the opening C and to make fairly close contact with the [fol. 336] bolt or pin employed, and it is obvious that instead of expanding it in the casing it may be expanded in the metal.

Having now particularly described and ascertained the nature of my said invention and in what manner the same is to be performed, I declare that what I claim is:

1. In the mounting of phonographs and like machines securing the base to the box or casing by bolts or pins in part surrounded by rubber or other elastic material adapted to be expanded by compression and insulate while binding the parts together, substantially as and for the purposes set forth.

2. The improvements in mounting phonographs and like machines, substantially as described, and as illustrated in the accompanying drawings.

Dated this 16th day of April, 1907.

Philip M. Justice, 55 & 56 Chancery Lane, London,
Chartered Patent Agent, for the Applicant.

Redhill: Printed for His Majesty's Stationery Office, by Love & Malcomson, Ltd.—1907.

(Here follows drawing, side folio 337)

[fol. 338] to the plane of the diaphragm offers a greater advantage in that it is very rigid and resists sag or flexure in a plane parallel to the diaphragm, and all the flexure is constrained to take place in the proper direction, namely at right angles to the plane of the diaphragm.

It is not essential in carrying out this invention to fix the sagging member to the diaphragm at a point half way between its extreme supports, but the fixing may be effected at any point in the length of the sagging member. Also it is not essential to effect the fixing at the central point of the diaphragm, but this may take place at any point on the diaphragm. If required also any number of sagging members may be applied to one diaphragm, and in the case of semiflexible or "rigid flexible" members it is not necessary to stretch them tightly between the supports but they can be stretched or laid between the supports without tension.

A modified form of sound box according to this invention could be constructed having two or more sagging members in series. For example if two are used the sagging of one of the members could move the supports for the other member which actuates the diaphragm.

Such a construction might be useful to get an increased amplitude of vibration of the diaphragm.

Dated the 22nd January 1908.

Arthur F. R. Curteis.

Complete Specification

Improvements in Sound Boxes for Talking Machines and the Like

I, Arthur Frederick Russell Curteis of 80, Blenheim Crescent, Notting Hill, London, W., formerly of 99 Queens Gate, London, S. W., Electrical Engineer do hereby declare the nature of this invention and in what manner the same is to be performed, to be particularly described and ascertained in and by the following statement:

The object of this invention is to provide improved means for transmitting the vibrations recorded on talking machine records to the diaphragm of the sound box belonging to the talking machine, or, conversely of transmitting the movements of the diaphragm which are due to the sound waves impinging thereon, to the needle or other suitable device or producing on the record an alternating trace or scratch or indentation corresponding in amplitude and frequency to the sound waves it is desired to record.

The invention may be applied to the sound boxes of any kind of talking or sound recording machine with which

such boxes are used, as for instance to those of gramophones using records on which the sound waves are recorded in the usual transverse manner, or to those of phonographs using records on which the sound waves are recorded by means of the usual indentations having varying depths.

The invention depends upon the principle that an intermediate part of a more or less flexible wire, string, rod, strip or the like, which is stretched or laid between and fastened at its two extremities to two supports, can be caused to increase its sag or bend when the supports are caused to come nearer together and vice versa.

By taking advantage of the foregoing principle, it is possible, whilst still maintaining the usual ratio of magnification between the amplitude of the recorded sound wave and that of the corresponding movement of the diaphragm, to [fol. 339] make the vibrating parts so light, and with such small moments of inertia, whilst still preserving the necessary rigidity, that a more truthful reproduction or recording of the sound is obtained. If on the other hand an increased volume of sound is desired, this may be secured by suitably proportioning the several parts and the quality of the sound will still be as good as with ordinary sound boxes giving a smaller volume of sound.

Fig. 1 shows in front elevation by way of example a sound box suitable for a gramophone constructed with sagging members according to this invention.

Fig. 2 shows a section of this sound box through the line t t' in Fig. 1. The lower parts and stylus comprising the supporting pins, base, lever arms, needle-holder and needle are however shown in side elevation.

Fig. 3 shows by way of example a view corresponding to Fig. 2 of another construction of sound box according to this invention.

Figs. 4 and 5 show by way of example in front and side elevation respectively a sagging member which is partly rigid and partly flexible and which will be hereafter described.

Fig. 6 shows by way of example a view corresponding to Fig. 2 of a sound box specially adapted for use with machines for phonograph or indented records.

Referring to Figs. 1 and 2, a represents the frame of the sound box and b a tube for supporting the box and for conducting the sound waves to or from a trumpet or the like. d represents the diaphragm which can be made of mica or of other suitable material. The edges of the diaphragm are clamped in the frame a between the two hollow rubber rings h and h'. The wire f f' passes through the centre of the diaphragm and also through the two small washers e and e' on either side of the diaphragm, and is soldered to these washers in such a way that the latter grip the diaphragm firmly between them. i is a block of aluminium or other suitable material which is fixed to the top of the frame a and the screws j and j' on either side of the block serve to clamp and tension the two sagging wires c and c', the latter of which passes through two small holes s and s' in the tube b. The sagging wires c and c' are each divided into two approximately equal portions, and the intermediate points g and g' thus obtained are soldered to the two ends of the wire f f'. The stylus or vibrating lever or member consists of the base l, the lever arms m and m', the needle holder or lever arm n with the needle p, and the needle clamping screw o. The conically pointed ends of two supporting pins k and k' which are fixed at their other ends in the frame a project into two corresponding conical depressions or centre punch holes in the base l, in such a way that the said base together with the arms m and m', the arm n and the needle p, can rock on an axis 1, 2 corresponding to a line drawn through the pointed ends of the two pins k and k', but cannot move with respect to any other axis.

The two sagging wires are in this case stretched fairly tightly between the supports j, m and j', m', and due to the length of the wire f f' the wires c and c' are each caused to sag slightly towards the diaphragm d. The wires c and c' are arranged to have equal tensions, and the pointed ends of the pins k and k' are thus caused to press tightly into the corresponding depressions in the base l and the whole stylus is held quite firmly and in a symmetrical position with respect to the diaphragm d without any other support or fixing being necessary.

A special feature of this construction of sound box is the possibility of obtaining a stylus which is very light and also very rigid.

The arms m and m' each have two small holes drilled near their outer extremities, and a small hole is also drilled at each of the points q and q' of a boss on the needle holder n. A wire is passed through each of the inner holes in the arms m and m', through the holes at q and q' in the boss and round the needle holder n, and having been suitably tensioned is passed along the diaphragm side of the arms m and m' and its two ends are clamped under the head of a small screw r [fol. 340] let into the centre of the base l. The arms m and m' are in this way braced so that they scarcely have to withstand any bending moment but only a plain compressive stress, and they can therefore be made very light. The sagging wires c and c' are in reality only one wire, since at the stylus end the wire c passes through the hole in the outer extremity of the lever arm m, then passes round or through the needle holder n close under the arms m and m', and afterwards through the hole in the extremity of the arm m' from which it emerges as the wire c'. By reason of the friction of the wires in the holes the former cannot slide in the latter, but behave for all practical purposes as if they were clamped with screws. A further advantage, making for lightness without the sacrifice of rigidity, is the absence of all soldered or brazed joints in the stylus, as it is then possible to construct the latter of some light material such as aluminium which does not readily take solder.

The action of this sound box is as follows:—As the sound groove on the gramophone record travels along under the needle in the direction of the line 3, 4 Fig. 1, as indicated by the arrow head, the needle oscillates from side to side round the axis 1, 2. When the needle moves to the left in Fig. 2 the arm m moves downwards and causes the supports for the wire c to get further apart. The point g is thus dragged outwards to the right and pulls the centre of the diaphragm d along with it. The arm m' has at the same time however moved upwards, causing the supports for the wire c' to come nearer together, and the wire c' is therefore eased sufficiently to allow the point g' to be pulled over to the right by the traction at the point g. As soon as the needle moves to the right the reverse action takes place, the wire c' now becoming the tractor at its point g' and the centre of the diaphragm is pulled to the left.

If desired the small holes s and s' in the tube b may be covered over by washers of cloth, rubber or other suitable

material. The wires c and c¹ may also be firmly clamped by screws or other means at the outer extremities of the arms m and m¹, instead of passing through the small holes in the said arms. Moreover the inner holes in the outer extremities of the arms m and m¹ of the stylus and the bracing wire which passes through these holes may be dispensed with so that there is no bracing, or alternatively the bracing may be obtained by leading the wire c, after passing it through the hole in the arm m, through the holes q and q¹ and then to the hole in the arm m¹ from the other side of which it emerges as the wire c¹. The holes q q¹ can be done away with and the wire threaded through a hole in the side of the holder n if desired.

Fig. 3 shows by way of example another construction of sound box in which only one sagging wire is used. This construction is similar to the one explained above with reference to Figs. 1 and 2, with the exception that a spiral spring t for balancing the pull on the stylus of the sagging wire c takes the place of the sagging wire c¹, and another spring t¹ which is fixed to a pin v passing through the tube b acts to pull the diaphragm to the left when an increase of sag in the wire c allows this to be done. The action of this modified sound box will be clear without further explanation, and it will also be clear that the combined pull of the sagging member and of the spring t holds the stylus securely against the supports k and k¹.

The sagging members, according to this invention, may be constructed in a variety of patterns. For example, instead of wires, thin strips of metal or other material may be used with their flatness parallel to the plane of the diaphragm. As a strip member would not crumple up as easily as a perfectly flexible member when the supports came nearer together, it would be possible to construct a sound box with such a strip member on the lines of Fig. 3, but without the spring t¹. The wire or rod f would however in this case have to be capable of with standing compression as well as tension, and different arrangements for support- [fol. 341] ing the stylus might be necessary. Moreover any semiflexible member can be used in this manner.

Figs. 4 and 5 show two views in front and side elevation respectively of a sagging member according to this invention which is partly rigid and partly flexible. It consists of two rigid round bars a and a¹ connected together by a

flat strip b with its flatness parallel to the plane of the diaphragm. The flat strip b is fixed at its centre either directly or indirectly to the diaphragm of the sound box. Flat strips c and d with their flatness parallel to the plane of the diaphragm are fixed to the outer extremities of a and a' and are secured to the supports in any convenient way, such as by means of screws e and f. The action of such a sagging member will be clear without further explanation.

Sound boxes, as already described with reference to Figs. 1, 2 and 3 of the drawings, can with suitable attachments be used with either transverse or indented records, but if used with gramophone or transverse records the sound grooves on the latter would travel, for example, parallel to the plane of the paper along the line 3, 4 in Fig. 1 and in the direction of the arrow head. The depth of the grooves in the thickness of the record would also be at right angles to the line 3, 4 and parallel to the plane of the paper.

If the sound boxes are used with phonograph or indented records the sound grooves would travel, for example, as indicated by the line 3, 4 and the arrow head in Fig. 2, and the needle should be replaced by the usual jewel or sapphire point.

It may be desirable to modify the construction of the sound boxes as previously described in order to adapt them easily to machines for use with phonograph or indented records. Fig. 6 shows by way of example a sound box constructed on the same lines as that described with reference to Figs. 1 and 2, but in which the jewel holder n is bent out of the symmetrical position. The line 3, 4 and the arrow head indicate the direction of travel of the sound groove.

It is obvious that sound boxes having a sagging member or members according to this invention can be made which differ more or less in construction from those already described with reference to the drawings. For instance a system consisting of any number of sagging members may be used to actuate or to be actuated by one diaphragm or a system of two or more sagging members can be used in series. With a system of two such members in series the sagging of one can be arranged to move the supports for the other and the sagging of the latter can actuate the diaphragm of the sound box. Moreover I may use the sag-

ging members for actuating the compressed air valves which are sometimes used in sound boxes for reproducing sound instead of the diaphragm, and I wish the word diaphragm in my specification and claims to be read in this sense also.

Also the stylus may be held against its pivots or supports by devices which do not depend for their action on the tension of the sagging members, and the supports may take the form of knife edges instead of the conically pointed pins, and may engage suitable grooves in the base I. A pad or the like of cloth, rubber, or similar material may be arranged to bear lightly, by spring pressure or otherwise, on the sagging members, in order to prevent the metallic ringing sound which can sometimes be noticed.

I am aware of the arrangement described in Specification Number 7080—94 with reference to Figures 7 and 8 of the drawings, in which a double cord transmits the sound vibrations, directly through a ring D^5 between the stylus and the diaphragm, and in which two springs or weights D^6 are used in conjunction with the ring, partly to adjust the pressure of the stylus on the record, and partly to allow a margin for irregularities in the phonogram other than those due to the sound. My specification however does not refer to means for obtaining these two latter adjustments, and I do not claim phonograph sound boxes constructed in this manner.

[fol. 342] Having now particularly described and ascertained the nature of my said invention and in what manner the same is to be performed, I declare that what I claim is:—

1. In sound boxes for sound reproducing or recording machines the use of a sagging member or members substantially as described.

2. In sound boxes for sound reproducing or recording machines the use of two sagging members or systems of members one of which is connected to one side of the diaphragm and the other to the other side, to actuate the diaphragm or to be actuated by it substantially as described.

3. In sound boxes for sound reproducing or recording machines the use of a spring or springs in combination with a sagging member or members to react against the pull of the latter on the stylus or on the diaphragm or on both substantially as described.

4. In sound boxes having sagging members for sound reproducing or recording machines utilizing the tension of the sagging members to hold the stylus or vibrating member up against its support or supports in such a manner that no additional means of support for the stylus are necessary substantially as described.

5. In sound boxes for sound reproducing or recording machines arranging two or more sagging members in series so that the sagging of one actuates the supports for another substantially as described.

6. In sound boxes as claimed in Claim 3 arranging the sagging member or members and the spring or springs which react against the pull of the former on the stylus, so that they conjointly hold the stylus against its supports substantially as described.

7. In sound boxes having one or more sagging members for sound reproducing or recording machines a stylus or vibrating lever without soldered or brazed joints substantially as described.

8. In sound boxes having one or more sagging members for sound reproducing or recording machines bracing the lever arms of the stylus by means of wire substantially as described.

9. Sound boxes constructed and arranged substantially as described with reference to the drawings.

Dated the 23rd day of March, 1908.

Arthur F. R. Curteis.

Redhill: Printed for His Majesty's Stationery Office, by Love & Malcomson, Ltd.—1908.

[fol. 343] No. 17,827, A. D. 1909

Date of Application, 31st July, 1909—Accepted, 11th Nov., 1909

Complete Specification

(A Communication from Excelsiorwerk Fabrik für Feinmechanik, m.b.H., of 121, Niehler Kirchweg, Cöln-Nippes, in the Empire of Germany, Manufacturers)

"Improvements Relating to Talking Machines"

I, Ernst Zappert, of 27, Chancery Lane, in the County of London, Engineer, do hereby declare the nature of this in-

vention and in what matter the same is to be performed, to be particularly described and ascertained in and by the following statement:

This invention relates to encased talking machines of the kind in which the record and sound-box-arm are enclosed in a chamber arranged beneath a second chamber, into which the sound-horn opens and which is open at the front. In the apparatus of this kind heretofore known, it has been suggested to improve the quality of the sounds by means of strings mounted in the open front of said second chamber, which is made shallow.

Now according to the present invention, instead of using said strings, the said second chamber is made of sufficient depth to serve as a resonating chamber and a curved surface or surfaces are employed adjacent to the opening of said second chamber to distribute the sound. This curved surface serves at the same time as a cover for the space in which the record-disc and the sound-box-arm are arranged. The said sound-box-arm is preferably made with a section formed of a composition of celluloid and a fibrous material or of any other suitable material which is a non-conductor of sound, so as to prevent the transmission to the sound horn of undesirable sounds, such as those caused by the movements of the driving mechanism of the instrument.

In the accompanying drawings, it is shown how the said invention may be conveniently and advantageously carried into practice. In this drawing,

Figure 1 is a front elevation and

Figure 2 a transverse section of a talking machine and casing constructed according to the present invention.

Figure 3 is a perspective view of the above apparatus with the cover of the record-disc chamber partially open.

Above the clockwork a is arranged a resonating chamber b. Into this chamber extends the sound horn c having a pivotal tubular arm g bearing the sound-box j. This arm g is capable of turning about a vertical axis on a pivot k and about a horizontal axis at m. The tubular arm g has a section n preferably formed of a composition consisting of celluloid and a fibrous material which has the effect of intercepting grating and other undesirable noises before they pass to the horn c. To the bottom d of the resonating chamber there adjoins a curved surface f which serves simul-

A.D. 1909 JULY 31 N° 17,827.
ZAPPERT'S COMPLETE SPECIFICATION.

(1 SHEET)

Fig. 1.

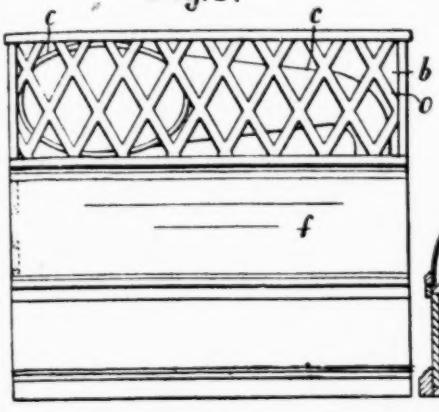

Fig. 2.

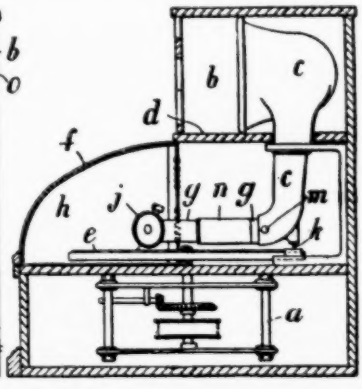

Fig. 3.

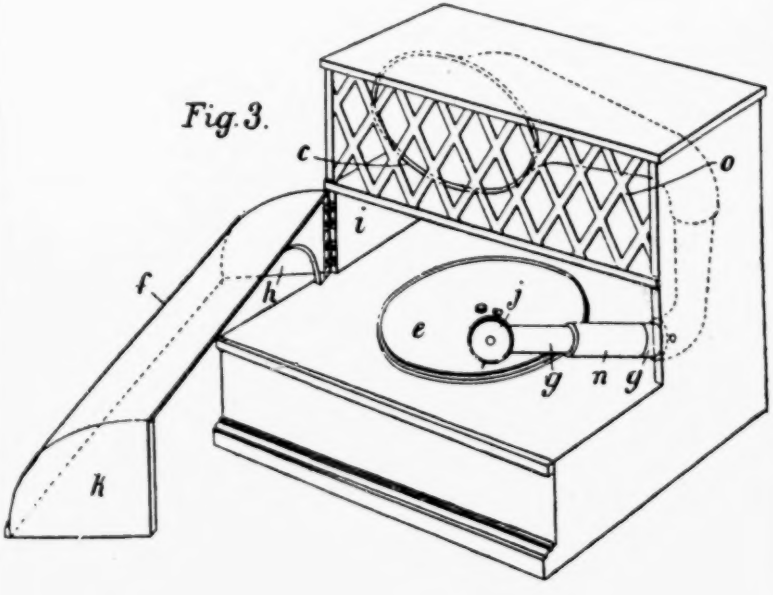

A.D. 1909. Nov 17 N° 26,738.

ROSENTHAL'S COMPLETE SPECIFICATION.

SHEET 1

Fig. 1

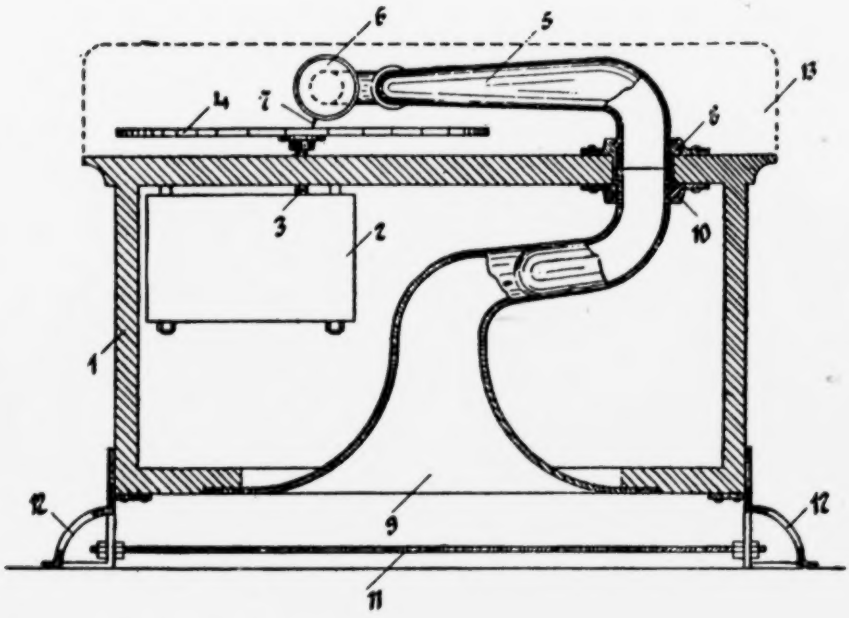

[This Drawing is a reproduction of the Original on a reduced scale.]

Fig. 2

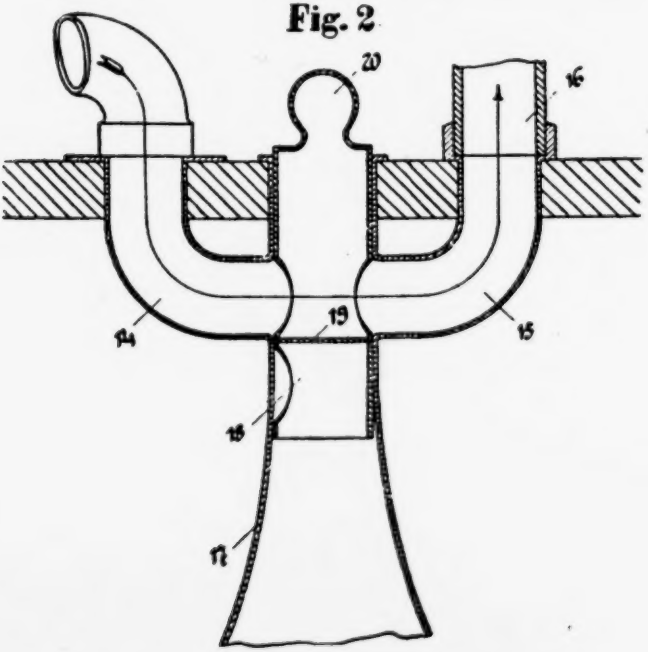

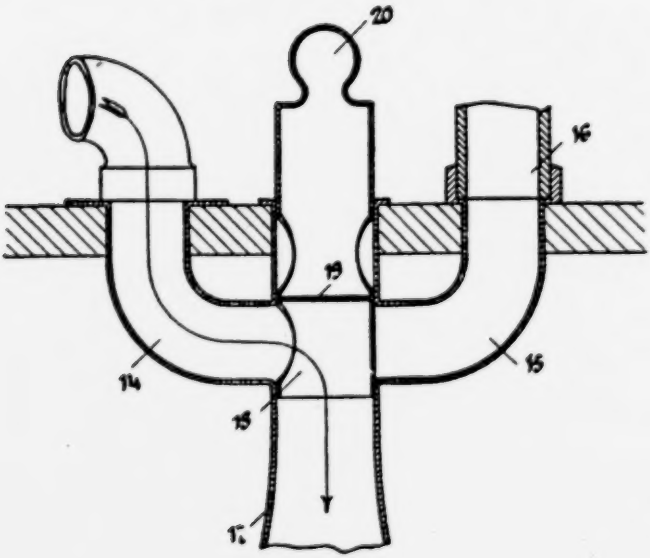

Fig. 3

taneously as a sound-distributor and as a cover for the front part of the chamber containing the record-disc e and the sound-box-arm g.

The curved surface f is provided with two side walls, h, h, of which one is hinged to the wall i of the main casing standing flush with it, so that the curved surface may be swung out horizontally into the position shown in Figure 3.

The front of the resonating chamber b is closed by means [fol. 344] of bars, o, o, or fretwork which may be covered on the inside with a light fabric, such as muslin, silk or the like.

In most of the encased talking machines heretofore constructed, the sound has been conducted downwards on its way out of the apparatus, thereby necessitating the employment of a number of bends in the sound horn or in the tube leading thereto. This arrangement involves considerable loss of volume and purity of the sound, which is entirely obviated by the present construction wherein the sound ascends and passes out directly.

Having now particularly described and ascertained the nature of the said invention and in what manner the same is to be performed, as communicated to me by my foreign correspondents, I declare that what I claim is:

1. A talking machine, characterized in that the horizontal sound horn extends into a resonating chamber arranged above the clockwork and the bottom of the resonating chamber adjoins a curved surface which serves simultaneously as a sound distributor and as a cover for the space in which the record-disc and the sound-box-arm are arranged, substantially as described.

2. A constructional form of the talking machine claimed in Claim 1, in which the sound-box-arm is made with a section of a composition containing celluloid and a fibrous material, for the purpose specified.

Dated this 31st day of July, 1909.

D. Young & Co., 11 & 12, Southampton Buildings, London, W. C., Agents for the Applicant.

Redhill: Printed for His Majesty's Stationery Office, by Love & Malcomson, Ltd.—1909.

(Here follow drawings, side folios 345 and 346)

[fol. 347] No. 26,738, A. D. 1909

Date of Application, 17th Nov., 1909—Accepted, 14th Apr., 1910

Complete Specification

Improvements in Talking Machines

I, Louis Rosenthal, of 34 Mittelweg, Frankfurt-on-Main, in the German Empire, Merchant, do hereby declare the nature of this invention and in what manner the same is to be performed, to be particularly described and ascertained in and by the following statement:—

The present invention relates to talking machines of the class having trumpets mounted within the cabinet or casing. One part of the invention consists in using a downwardly directed internal trumpet having its orifice at or adjacent an aperture in the raised bottom of the casing, so that the sound is uniformly emitted in all horizontal directions. A sound board may be arranged below the aperture. Another part of the invention consists in combining the internal sound-tube with an external sound-tube, and with a switch enabling the two sound-tubes to be alternatively used.

A construction embodying these improvements is shown in the annexed drawing, in which

Figure 1 is a vertical section of the machine.

Figures 2 and 3 show the sound-switch in two different positions.

Referring to Figure 1, the motor is arranged in a box 2 within the casing 1. The record disc 4 is fixed to the spindle 3, arranged somewhat to one side of the casing. The sound-arm 5, which is preferably articulated, carries the sound-box 6 with needle 7, and traverses a bearing 8, in which it joins the horn 9. The latter has its mouth at an aperture in the bottom of the casing. Preferably the bent sound-tube, comprising the arm and the stem of the horn, is made of uniformly increasing cross-section; this improves the sound. A sound-board 11 may be fixed to the feet 12 of the casing, below the trumpet, but is not essential. The casing has a cover 13.

The sound issues uniformly in all horizontal directions from the mouth of the horn, without requiring for that purpose deflection by radial resonance chambers, such as have heretofore been proposed, and the uniformity is more com-

A.D. 1910. JUNE 20. No. 15,675.
LYONS' COMPLETE SPECIFICATION
1 SHEET

[This Drawing is a reproduction of the Original on a reduced scale.]

Fig. 1.

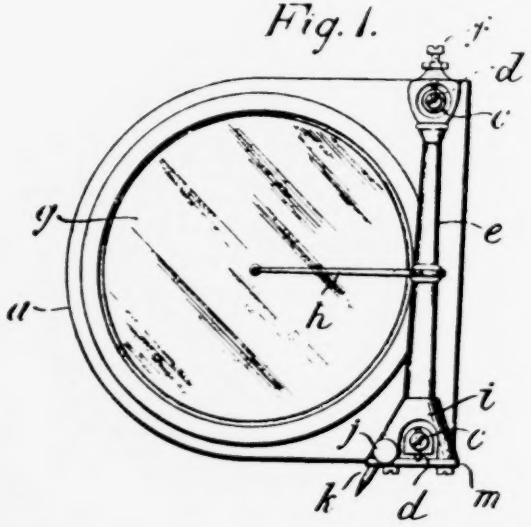

Fig. 2.

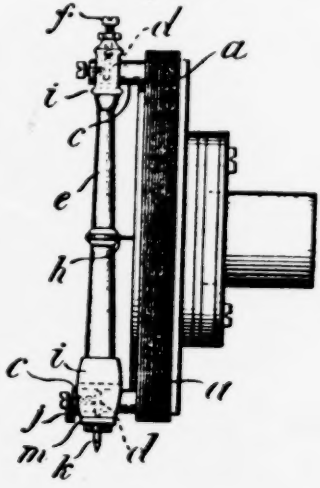

plete than can be obtained with deflecting chambers coacting with a horizontally directed horn.

Figures 2 and 3 show a sound-tube comprising two parts 14 and 15. The part 15 is joined at 16 to a horn arranged above the casing. Both the tubular parts 14 and 15 communicate at 17 with the horn in the casing. The part 14 can be placed in communication with either of the horns, the connection being controlled by means of a switch consisting of a tube 18 with a central partition 19, two lateral apertures above said partition, and one lateral aperture below the partition. The tube 18 is open at the bottom and closed at the top, where it has a knob 20 enabling it to be moved up and down. With the tube 18 in the position shown in Figure 2, the sound is emitted by the upper horn; with the tube 18 lowered, as in Figure 3, the sound is emitted by the lower horn. Any other equivalent device may be used for alternatively connecting the tube 14 and sound-box to the tubes 15 and 17.

The provision of alternative horns as described is very valuable in the case of a machine which is to be used both for marches and like music, and for chamber music.

[fol. 348] Having now particularly described and ascertained the nature of my said invention, and in what manner the same is to be performed, I declare that what I claim is:—

1. A talking machine with a downwardly directed sound-tube inside the casing, with its mouth at or adjacent an aperture in the raised floor of the casing.

2. A talking machine as claimed in Claim 1, with a sound-board supported below the aperture in the floor.

3. A talking machine as claimed in Claim 1, with an additional sound-tube leading to a horn outside the casing, and a switch enabling the sound-box to be alternatively placed in communication with the internal and external sound-tubes.

Dated this 17th day of November, 1909.

Herbert Haddan & Co., Agents for Applicant, 31 & 32, Bedford Street, Strand, W. C., London.

Redhill: Printed for His Majesty's Stationery Office, by Love & Malcomson, Ltd.—1910.

(Here follows drawing, side folio 349)

[fol. 350] resistance should be offered to the free movement of the needle arm and the point of the needle should always maintain a constant position in the sound groove and the object of my present invention is to provide improved means whereby this result may be attained and with this end in view my invention may be said to embody a construction in which the needle bar and the various parts of the sound box are arranged in such a manner that the point of the needle when vibrating will describe an arc of a circle in a plane parallel to the face of the record.

This may be effected by arranging the needle arm as a vertical bar pivoted freely at both ends, from projecting supports at the circumference of the sound box shell, and having an arm projecting at right angles over the centre of the diaphragm with which it is connected by a wire or metal strip or in any other suitable manner said vertical bar carrying upon its lower end means whereby the needle may be mounted.

Under my invention a greater degree of amplification is permitted than in sound boxes heretofore constructed and consequently a fuller and more natural reproduction is obtained.

I have found by actual experiment that the point of a needle after use in my improved sound box takes the exact shape of the sound groove which renders it capable of following exactly every delicate undulation and giving a more exact and perfect rendering of tone.

Dated this 29th day of June, 1910.

Hughes & Young, Registered Patent Agents, 55/56, Chancery Lane, London, W. C.

Complete Specification

Improvements Relating to Sound Boxes for Gramophones and Like Sound Recording and Reproducing Instruments

I, Cornelius Lyons, Accountant, of Gurteenard, Kanturk, Co. Cork, Ireland, do hereby declare the nature of this invention and in what manner the same is to be performed to be particularly described and ascertained in and by the following statement:

This invention has reference to sound boxes for gramophones for reproducing what are technically known as "needle cut" disc records and has for its object to provide improved means for mounting the needle whereby noise and scratching during the operation of the instrument shall be minimized

The invention relates to sound boxes in which the stylus is supported from the sound box shell in such a manner that its point when vibrating describes an arc of a circle in a plane parallel to the face of the record.

The invention has for its object to provide an improved construction of sound box of that type in which a greater degree of amplification is permitted and consequently obtain a fuller and more natural representation.

According to my invention the gramophone sound box is provided with a pair of projecting studs or pillars and a vertical arm pivotted freely from the studs preferably by means of adjustable pivot pins. The vertical arm is connected by a horizontal arm with the centre of diaphragm and secured thereto by a wire or other suitable means. At the lower end of the vertical arm is provided a shoe having a hole bored in which the needle is inserted and clamped in position by means of a thumbscrew.

In order that my invention may be readily understood and [fol. 351] carried into effect by those skilled in the arm to which it appertains I will now proceed to describe the same fully for which purpose reference is to be had to the accompanying drawings in which:

Fig. 1 represents an elevation of a sound box embodying my invention.

Fig 2 is an elevation of the same taken at right angles to the view shown in Fig. 1.

In carrying my invention into practice the shell of the sound box a is provided with lugs or brackets or an extension of the shell itself carrying studs or pillars c in which pivot pins d are mounted. The vertical needle arm e is supported by said pivot pins d as shown a screw f being provided as the top bearing in order that the needle arm e may be so adjusted as to swing freely on the said pins. The vertical arm e is connected by means of the arm h to the diaphragm g to which it is secured by a wire or in any other suitable manner. The lower end of the vertical needle arm e is provided with a shoe i in which the needle k is

mounted in a hole bored for the purpose and held therein by means of a thumb screw j. A plate m screwed to the shoe acts as bearing for the lower pivot pin.

It will thus be seen that with a sound box constructed in accordance with this invention the point of the needle will during operation of the instrument describe an arc of a circle in a plane parallel to the face of the record and consequently a greater degree of amplification is permitted than in sound boxes as heretofore constructed and consequently a fuller and more natural representation is obtained.

I have found by actual experiment that the point of a needle after use in my improved sound box takes the exact shape of the sound groove which renders it capable of following exactly every delicate undulation thus giving a more exact and perfect rendering of tone.

Having now particularly described and ascertained the nature of my said invention and in what manner the same is to be performed, I declare that what I claim is:

1. In a sound box for gramophones and like of the type specified sound recording and reproducing instruments in which the stylus is supported from the sound box shell the combination with a sound box shell of a pair of studs or pillars projecting therefrom, a vertical arm pivotted freely from said studs or pillars and means carried by said vertical arm for supporting the needle point and means for connecting the vertical needle arm with the diaphragm substantially as described and for the purposes specified.

2. A sound box for gramophones and like sound recording and reproducing instruments constructed and arranged and having its several parts adapted to operate substantially as hereinbefore described with reference to the accompanying drawings for the purposes specified.

Dated this 12th day of January, 1911.

Hughes & Young, 55/56, Chancery Lane, London, W. C., and 9, Burgh Quay, Dublin, Registered Patent Agents.

Redhill: Printed for His Majesty's Stationery Office, by Love & Malcomson, Ltd.—1911.

(Here follows drawing, side folio 352)

A.D. 1910. Dec. 22. N° 29,833.
BROWN'S Complete Specification. (1 Sheet.)

[This Drawing is a full-size reproduction of the Original.]

Fig. 1.

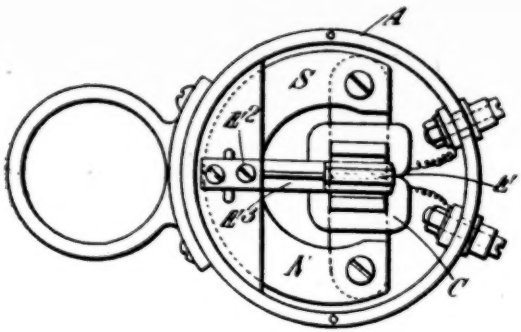

Fig. 2.

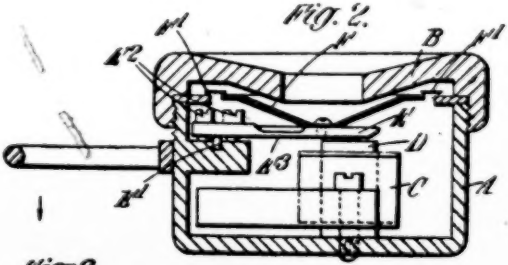

Fig. 3.

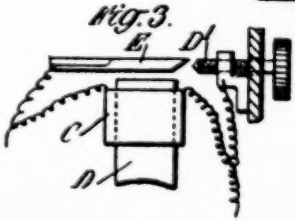

Fig. 4.

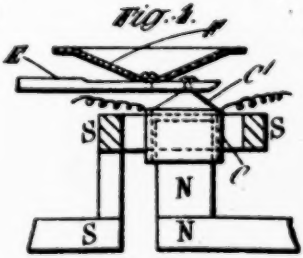

[fol. 353] may be quite free, or it may be attached to the inner edge of a flat flexible ring, the outer edge of which is fixed to the casing, the said ring and member thus dividing the latter into two compartments. The flexibility of this ring, and the manner of its attachment to the aforesaid member, should not be such as to hamper or suppress the small vibratory movements of any part of the member to any appreciable extent. The said member may be made of any suitable material, and in this connection I may state that I have found aluminium to be satisfactory.

The working of the device described above will be readily understood. The vibratory movements of the portion of the armature to which the aforesaid member is attached are imparted to this member as a whole; this member therefore acts like a reciprocating piston and sets a large surface of air into vibration simultaneously and to the same or approximately the same extent at all points. In the case of the said member being conically shaped, the increased efficiency is probably due partly to the fact that the disturbances set up in the air in contact with the conical surface tend to converge and to arrive simultaneously at the region where the ear of the operator is situated. In any case the distinctness and audibility of messages received are largely increased, and the range of distance over which speech is practicable is also increased.

Dated this 22nd day of December, 1910.

Haseltine, Lake & Co., 7 & 8, Southampton Buildings, London, England, and 60, Wall Street, New York City, U. S. A., Agents for the Applicant.

Complete Specification

Improvements Relating to the Reproduction of Sound by Electrical Means

I, Sidney George Brown, of 4, Great Winchester Street, in the City and County of London, Electrical Engineer, do hereby declare the nature of this invention and in what manner the same is to be performed, to be particularly described and ascertained in and by the following statement: This invention relates to the reproduction of sound by electrical means and has particular reference to telephone receivers.

The usual telephone receiver consists of a polarised electro-magnet through the coil of which the line currents pass, and a flat soft iron diaphragm gripped peripherally and thereby held a short distance away from the electro-magnet. Variations in the strength of the line current cause the diaphragm to vibrate, and, in so doing, to set the surrounding air into vibration.

In order to obviate the unequal extent of vibration of different points on a peripherally gripped diaphragm proposals have been made to support the diaphragm at its centre leaving the periphery free, or to provide for resiliency or flexibility between the diaphragm proper and its peripheral support, thereby obtaining a piston-like action of the diaphragm. It has been suggested to form such diaphragms of metal, ebonite, or other suitable material, and to impart to them a conical or dished appearance. The chief object of the present invention is to provide an instrument of this kind in which a high efficiency of conversion of oscillations or variations of electric current into acoustic vibrations is obtained. Apart from the actual construction and positioning of the parts of such an instrument, the conditions necessary for the transmission of the air vibrations away from the actual surface of the diaphragm are of im- [fol. 354] portance. Hitherto sufficient attention has not been paid to the volume of air set in motion and the vibrations of air pressure for producing the most effective transmission. The dimensions of the ear-drum and of the aural cavity may be taken as invariable factors in such considerations. Now these factors being known, there are certain relations existing between them and the size of the diaphragm, the nature of the air pressure variations, and the volume of air set in motion, for the most effective reproduction of the sounds, and the transmission of them to the ear-drum. For these and other reasons it is quite impracticable to make the diaphragm fulfil also the functions of an ear piece; a separate ear piece is a necessity.

According to the present invention the receiver comprises a light conical or similarly shaped diaphragm, a resilient member responsive to variations of current strength in a coil through which the line currents pass and carrying the diaphragm by its centre so that the latter is free to vibrate as a whole, and a cover or ear piece situated

over the diaphragm at a comparatively short distance from the same. The inner surface of the cover or ear piece of the receiver is preferably formed to correspond approximately with the shape of the diaphragm, so as to reduce the excessively large space that would otherwise intervene between these parts. I have found that a conical disc formed from a very thin sheet of aluminium or aluminium alloy or steel and suitably stiffened by ribs, or corrugations, or otherwise, possesses the requisite properties to a satisfactory degree. The thin disc, if of aluminium or an alloy thereof, may conveniently be spun into the desired conical shape with a flat centre piece. It is advantageous for the strength and thickness to be greatest at the centre and progressively less towards the edge, and by starting the spinning operation at the edge and working towards the centre, this property of the spun disc will be naturally produced owing to the graduated thickness of the disc. To increase this effect several discs of different diameter may be assembled into a pile. The thickness of such discs may be of the order of 2½ thousands of an inch. Some idea as to the lightness of a diaphragm so formed may be gained from the fact that when it is allowed to drop to the ground it does not fall like a heavy mass of metal, but moves gently through the air. The mere conical shape of the diaphragm will ensure a considerable amount of rigidity but this may be increased by providing radial ribs or corrugations on it as above mentioned.

The viratory member that carries the diaphragm may consist of a resilient strip or reed of magnetic metal containing within itself, by reason of a cut-away portion, its own control and that of the diaphragm. The diaphragm is preferably attached at its centre to a point on the metal strip or reed slightly away from the free end of the latter so as to be eccentric with respect to the axis of the coil through which the line currents pass. The diaphragm is so arranged as to be free to move as a whole, that is to say all points on its surface vibrate equally, and to ensure this action the periphery of the diaphragm is either quite free or is attached to the usual casing by a mere thin ring of flexible material.

In order that the invention may be clearly understood and readily carried into effect I will now describe the same

more fully with reference to the accompanying drawings, in which:

Figure 1 is a plan with the cover removed, and

Figure 2 a sectional elevation, of one constructional form of my improved receiver. These drawings represent a full size receiver, and the more important dimensions such as the diameter of the diaphragm, the extent of its eccentricity, and the volume and shape of the air space between the diaphragm and the ear-piece or cover are what I have found by experiment to give good results for hearing with the receiver close to the ear, by reason, no doubt, of the relation these dimensions bear to the diameter of the ear-drum and the volume of the aural cavity. Where it is desired to make the sounds travel out into the room, a receiver of larger size is preferable.

[fol. 355] Figures 3 and 4 are detail sectional elevations of modifications of the receiver.

Referring first to Figures 1 and 2, A is the casing and B the ear-piece or cover of the receiver. E is a metal reed one end of which is held down upon a bridge piece E^1 on the casing E by two adjusting screws E^2. N and S represents the north and south poles, respectively, of a polarised electromagnet to the ends of which are attached L-shaped pieces the vertical members of which, constituting the cores D, have the coil C wound around them; the ends of the said vertical members slope towards one another so as to be directly under the metal reed E. A portion E^3 of the reed E is cut away to increase its flexibility and decrease its weight. I have found that a suitable free period for the reed is from eight hundred to one thousand two hundred. The extent to which the reed E can approach the core D may be regulated by packing some layers of paper between these parts or by arranging a set screw to make contact with the reed, the provision of a set screw being shewn at D^1 Figure 3. This set screw D^1 may be tipped with gold or platinum so as to serve in conjunction with the reed E as a make and break arrangement in a circuit connected in parallel with the coil C. In this way any damage to the permanent magnetism of the core D owing to an extra heavy current passing through the coil C at any time is avoided, since the closing of the shunt circuit by the contact of the reed E with the set screw D^1 diverts the current away from the coil C.

F is a light aluminium diaphragm of conical form. It is attached at its centre to the reed E at a point eccentric with respect to the axis of the core D, the eccentricity being towards the fixed end of the reed. Although I have shown the best position for attaching the diaphragm in the particular receiver illustrated, the best position on any reed can be found by experiment by means of a stethoscope and by exploring the reed with the aid of a movable diaphragm.

The diaphragm F is either of such a size that its periphery is close up against the casing A or other adjacent stationary part, or, if an appreciable gap exists between these parts, the periphery of the diaphragm is flexibly attached to the casing or to a removable internal flange thereon by resorting to the known expedient of a ring of tissue paper, silk, or other suitable material F^1 that will not exert any appreciable mechanical constraint upon the diaphragm; this ring F^1 may be attached to the diaphragm and to the aforesaid flange by adhesive. In either case the space on the two sides of the diaphragm is divided into two separate air regions.

In the modification, shown in Figure 4, the north pole of the polarised electro-magnet is surrounded by a ring-shaped south pole. In the annular space between these poles is situated a circular frame C^1 on which is wound the coil C. The frame C^1 is carried by the metal reed E. Variations in the strength of the current traversing the coil C cause this coil C to move vertically and thereby cause the frame C^1 to vibrate the reed E, and consequently the diaphragm F also. In this construction it is to be noted that the movements of the reed E do not materially affect the magnetic field between the poles of the electro-magnet.

It will be understood that owing to the extreme lightness of the diaphragm and to its freedom from peripheral constraint, it will be highly responsive to movements of the reed E and will vibrate as a whole.

It will also be observed that the function of the reed E is not to set the air in motion but only to carry the diaphragm and control its movement. This reed contains within itself, by reason of its cut away portion E^1, the means of its own control and that of the diaphragm, and, in the arrangement shown in Figures 1 and 2, also serves to complete the magnetic circuit; the diaphragm forms no part of this circuit. The inner face of the cover or ear-piece B conforms ap-

proximately to the shape of the diaphragm, and its distance from the diaphragm is such as to give only the requisite air space between these two parts. The sectional area of the central hole or holes in the ear-piece is suitably proportioned to the aforesaid air space.

[fol. 356] Although the invention has been described and illustrated with reference to a "watch" type of receiver, it is of course equally applicable to the long handle type of receiver. It has been proved by actual experiment that receivers possessing the constructive features hereinbefore described considerably increase the maximum distance over which distinct speech can be conveyed.

Having now particularly described and ascertained the nature of my said invention and in what manner the same is to be performed, I declare that what I claim is:

1. A telephone receiver comprising a light conical or similarly shaped diaphragm, a resilient member responsive to variations of current strength in a coil through which the line currents pass and carrying the diaphragm by its centre, and a cover or ear piece situated over the diaphragm, substantially as and for the purposes specified.

2. A telephone receiver in which the inner surface of the cover or ear piece situated over the conical or similarly shaped diaphragm corresponds approximately with the shape of the diaphragm, substantially as and for the purpose specified.

3. A telephone receiver comprising a casing, a resilient member responsive to variations in the strength of the line current, a light conical or similarly shaped diaphragm carried at its centre by the resilient member, and a ring of thin flexible material connecting the periphery of the diaphragm with the adjacent wall of the casing or other stationary part, substantially as and for the purpose specified.

4. A telephone receiver, in which the diaphragm attached to the resilient member that is responsive to variations in the line current is situated eccentrically with respect to the electro-magnet, the eccentricity being towards the fixed end of the resilient member, substantially as described.

5. In a telephone receiver, a conical diaphragm built up, or radially corrugated or ribbed, or spun from a disc, in such a way as to be strongest at the centre and of diminishing strength towards the periphery, substantially as described.

A.D. 1911. Jan 16. No 1157.
BROWN'S COMPLETE SPECIFICATION.
(1 SHEET)

[This Drawing is a reproduction of the Original on a reduced scale]

Fig. 2.

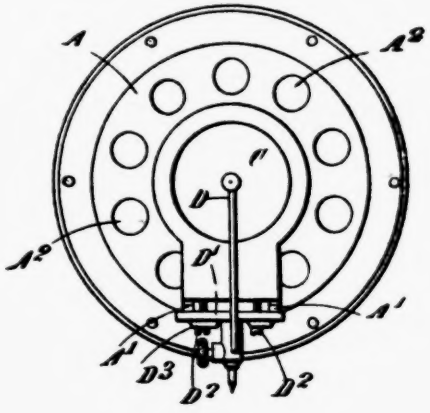

Fig. 1.

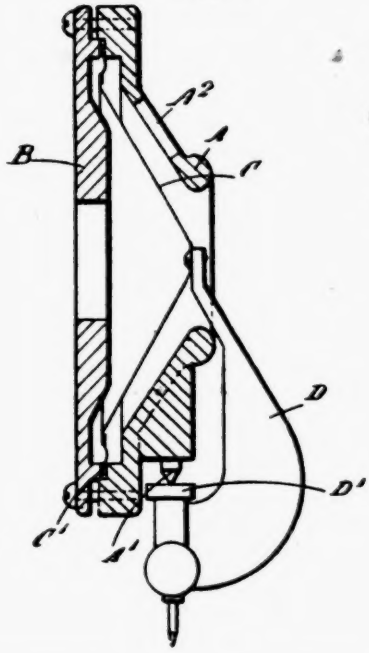

6. A telephone receiver, comprising a polarised electro-magnet through the coil of which the line currents pass, a magnetic armature having a cut-away portion to impart resiliency to it, a conical aluminium diaphragm attached to the armature eccentrically with respect to the electro-magnet and towards the fixed end of the armature, and a thin flexible ring of material connecting the periphery of the diaphragm to an internal removable flange on the casing, the latter having a conical inner face conforming approximately to the shape of the diaphragm, substantially as described.

7. A telephone receiver having its parts constructed arranged, and adapted to operate, substantially as hereinbefore described with reference to the accompanying drawings and for the purposes specified.

Dated this 19th day of June, 1911.

Haseltine, Lake & Co., 7 & 8, Southampton Buildings, London, England, and 60, Wall Street, New York City, U. S. A., Agents for the Applicant.

Redhill: Printed for His Majesty's Stationery Office, by Love & Malcomson, Ltd.—1912.

(Here follows drawing, side folio 357)

[fol. 358] be such that no great changes in the pressure conditions of the air are made to occur suddenly as the air vibrations travel outwards from the actual surface of the diaphragm. In other words an air space that ensures a gradual and uniform change in the pressure conditions of the air should extend not only from the broad outer end of the trumpet to the narrow end of the same or of the tone arm, but should also enable the best air conditions to be maintained between the said narrow end and the actual surface of the diaphragm. The narrow end of the trumpet or of the tone arm may be formed with a single passage leading up to the centre of the diaphragm, or it may comprise several passages the total sectional area of which is not greater than that of the single passage at the point where it branches.

In view of the comparatively large area of the diaphragm above described, the sectional area of the narrow end of the

trumpet or tone arm may be proportionally large, in which case a trumpet with a straight passage would suffice to affect the necessary gradual reduction in the air pressure of the acoustic vibrations before they reach the free air. In the case, however, of a trumpet or tone arm with a narrow end of small sectional area, the passage provided might require to be objectionably long if it were kept straight whilst preserving a gradual and uniformly decreasing sectional area along it, and it may in such cases be advantageous to make the passage tortuous, one portion of it being situated within the other portion or portions.

Dated this 16th day of January, 1911.

Haseltine, Lake & Co., 7 & 8, Southampton Buildings, London, England, and 60, Wall Street, New York City, U. S. A., Agents for the Applicant.

Complete Specification

Improvements Relating to Gramophones and the Like

I, Sidney George Brown, of 4, Great Winchester Street, in the City and County of London, Electrical Engineer, do hereby declare the nature of this invention and in what manner the same is to be performed, to be particularly described and ascertained in and by the following statement:—

This invention relates to gramophones and the like the chief object being to so construct and mount the diaphragm of the usual sound box that it is extremely sensitive or responsive to vibratory influences.

In the ordinary sound box arrangements of gramophones and the like, one end of the stylus bar or lever is attached to the centre of the diaphragm and the latter is gripped peripherally, with the result that since it is not absolutely free to vibrate freely at all points on its surface its responsiveness to vibratory influences is far from being efficient; moreover it is usually comparatively heavy with the result that its inertia makes it sluggish in action.

With a view to removing some of the constraint put upon the diaphragm by reason of its peripheral mounting, it has been proposed to form it with a conical centre portion and a resilient flange portion so that the conical centre portion, the apex of which is secured to the stylus bar or lever, may vibrate as a whole; in such a construction, however, the

damping and constraining action of the flange portion is in my opinion too great to ensure acoustical efficiency. It has also been proposed to transmit the vibrations of the stylus bar to the conical diaphragm through a connecting rod and to mount the diaphragm peripherally by a flexible mounting [fol. 359] of a folding character such as gold-beater's skin so as to ensure a movement of the diaphragm as a whole. I have found by experiment that maximum acoustical efficiency cannot be realized by merely causing the diaphragm to exercise a pumping action upon the air and that in particular a peripheral mounting should be avoided.

The solution of the problem seems to lie in causing the diaphragm to vibrate in such a way that its centre is a node and its periphery an anti-node. The vibrations that the diaphragm should in my opinion perform may be likened to those of a bell the thickness of which is reduced to such an extent that its vibrations are as large as possible in amplitude consistent with being just capable of being damped by the setting up of waves in the adjacent air. Since the centre of the diaphragm requires to be a node the diaphragm should be rigidly mounted by its centre on the stylus bar, and since the periphery requires to be an anti-node it must either be entirely free, or be connected to the casing or other stationary part by material so light and thin that no appreciable peripheral constraint is exercised. The peripheral connection between the diaphragm and the casing or other adjacent part must not be a good absorber of energy, since if it were it would damp the periphery of the diaphragm; on the other hand although it should possess resiliency it must not offer any appreciable mechanical constraint to the periphery. Consequently it must be composed of extremely thin and light resilient material.

According to the present invention, therefore, I realize the above conditions by rigidly mounting a conical or equivalently shaped diaphragm of very light weight by its centre on the usual stylus bar or lever, leaving its periphery either entirely free but very near to the casing or other stationary part, or connected to the latter by a ring of resilient material of extreme thinness—considerably thinner than the diaphragm periphery itself—the formation and the mounting of the diaphragm being in either case such that its centre is in a nodal and its periphery in an anti-

nodal condition. The ring of material, if used, may be connected by adhesive and should have a small amount of sag in order that the diaphragm periphery may vibrate without having any appreciable drag exerted upon it by the ring. Since the diaphragm must be very light though rigid, it may conveniently be formed from aluminium or aluminium alloy, being spun from a thin disc of the same into a conical shape with a flat centre piece. The thickness should be of the order of thousandths of an inch a satisfactory average thickness being 2½ thousandths. It is advantageous for the strength to be greatest at the centre and progressively less towards the edge, and by starting the spinning operation at the edge and working towards the centre, this property of the spun disc will be naturally produced. To increase this effect, several coned discs of different diameter may be assembled together so as to form a pile. In the case of a diaphragm thus built up, the several coned discs may differ in the sharpness of their conical angles.

Owing to the shape and lightness of the diaphragm and to its being rigidly mounted by its flat centre piece it responds very sensitively to sound waves striking upon it and efficiently absorbs the energy of these waves into its substance and concentrates this energy at the centre, and since this is the part at which the support is applied the energy is transmitted with maximum efficiency to the supporting means, that is to say to the stylus bar or lever.

Conversely, in order that the diaphragm may operate to reproduce sound efficiently, it must be extremely light and thin in order that the vibrations imparted to its nodal region may travel through its substance and develop into movements of large amplitude at its anti-nodal periphery; it will be understood that if the amplitude of the vibrations travelling in the substance of the diaphragm is low, and if reflected waves are produced in its substance, as would be the case with a comparatively heavy thick diaphragm, the energy of the vibrations would not be given off to the surrounding air efficiently. It is also essential that the only support for the diaphragm should be that through which the vibrations are imparted to it. Again, it is essential for the [fol. 360] support to be applied at a part from which the energy of vibrations transmitted by means of the support to the diaphragm can spread out uniformly through the substance of the diaphragm. Moreover, the diaphrag*h*m, al-

though light and thin, must be rigid, since otherwise the energy absorbed by the diaphragm becomes wasted in useless unsymmetrical and uncontrollable motions. A diaphragm constructed and mounted as above described complies with these requirements.

If the conical shape does not impart to the diaphragm all the requisite rigidity, it may also be ribbed or corrugated radially in the known manner. Some idea of the lightness of a diaphragm so formed may be gained from the fact that when it is allowed to drop to the ground, it does not fall like a mass of metal, but flutters like a leaf or piece of paper.

In order that the said invention may be clearly understood and readily carried into effect, I will describe the same more fully with reference to the accompanying drawings, in which:—

Figure 1 is a vertical section, and

Figure 2 a rear elevation of a sound box, diaphragm, and stylus lever, constructed in accordance with the invention.

A is the rear part and B the front part of the sound box, C is the diaphragm, and D the stylus lever. The cross piece D^1 carrying the stylus lever D is held against the two knife edges A^1 on the rear part A by two screws D^2 beneath the heads of which are spring washers D^3. The diaphragm C is attached to the stylus lever D at its flat centre piece, and the periphery of the diaphragm is shown connected to the sound box by the ring C^1 of extremely thin resilient material such as glazed tissue paper one three-thousandths of an inch thick or thin collodion film. The width of the annular space must either be so small that the two air regions on the two sides of the diaphragm may be considered as without communication with one another or the ring of material must be used; in the latter case the ring should be slack enough to permit of the diaphragm's movements without any appreciable mechanical constraint being put upon it. This ring instead of being connected directly to an integral part of the sound box, as shown, is preferably connected to a removable metal ring clamped between the rear and front parts. If more constraint upon the bodily movements of the diaphragm is required than is given by the stylus lever, the diaphragm and stylus lever might be secured to a blade spring fastened diametrically across the open central space of the rear part A. However, in most cases such a constraint is not necessary.

The rear part A of the sound box may be formed with several holes A^2 so that the air behind the diaphragm may not be imprisoned to such an extent as to interfere with the vibratory movements of the diaphragm.

Having now particularly described and ascertained the nature of my said invention and in what manner the same is to be performed, I declare that what I claim in connection with gramophones and the like is:

1. A very light and conical or equivalently shaped diaphragm rigidly mounted by its centre on the usual stylus bar or lever, leaving its periphery either entirely free but very near to the casing wall or other stationary part, or attached to the latter by a ring of resilient material of extreme thinness—considerably thinner than the diaphragm periphery itself, the formation and the mounting of the diaphragm being in either case such that its centre is in a nodal and its periphery in an anti-nodal condition, substantially as and for the purposes specified.

2. A conical diaphragm so formed or constructed as to be thickest at the centre and of decreasing thickness towards the periphery, substantially as and for the purposes specified.

3. A diaphragm formed by spinning a thin disc of [fol. 361] aluminium or aluminium alloy into a conical shape, the spinning being commenced at the periphery of the disc and continued towards the centre, substantially as and for the purposes specified.

4. A diaphragm built up of several cones of different diameters, substantially as and for the purpose specified.

5. Apparatus having its parts constructed, arranged, and adapted to operate, substantially as hereinbefore described with reference to the accompanying drawings for the purposes specified.

Dated this 17th day of July, 1911.

Haseltine, Lake & Co., 7 & 8, Southampton Buildings, London, England, and 60, Wall Street, New York City, U. S. A., Agents for the Applicant.

Redhill: Printed for His Majesty's Stationery Office, by Love & Malcomson, Ltd.—1912.

[fol. 362] IN THE UNITED STATES CIRCUIT COURT OF APPEALS FOR THE NINTH CIRCUIT

Appeal No. —

LEKTOPHONE CORPORATION, Appellant,

vs.

THE ROLA COMPANY, Appellee

Stipulation re Foreign Patents

It is hereby stipulated and agreed by and between the parties hereto, pursuant to Rule 15 of this court, that a certified copy of the translation of French Patent No. 127,180 to Ader (1878), being one of the patents comprising Defendant-Appellee's Exhibit No. 9, may be filed with the Clerk of this court and become a part of the printed record on appeal.

It is further stipulated and agreed that the following named prior art patents of Defendant-Appellee's Exhibit No. 9 may be omited from the printed record on appeal:

Canmont et Cie. (French), 331,226—1903.
Welton (French), 362,926—1906.
Persichetti (French), 397,609—1908.
[fol. 363] Muller (German), 183, 685—1906.
Otto (German), 220,412—1909.

Wm. H. H. Davis, Chas. M. Fryer, Attorneys for Plaintiff-Appellant. Chas. E. Townsend, Wm. A. Loftus, Attorneys for Defendant-Appellee.

Dated: March 21, 1929.

[Endorsed]: Stipulation Re Foreign Patents. Filed Apr. 9, 1929. Paul P. O'Brien, Clerk.

(Here follows drawing, side folio 364)

[fol. 365] 390

Department of Commerce, United States Patent Office

To all persons to whom these presents shall come, Greeting:

This is to certify that the annexed is a true copy from the records of this office of a Translation made by the Official

Translator of the Specification in the matter of the French Letters Patent to Ader, Dated October 28, 1878, Number 127,180, for Electrophonic Loud Speaking Receiver.

In testimony whereof I have hereunto set my hand and caused the seal of the Patent Office to be affixed, at the City of Washington, this fifteenth day of March, in the year of our Lord, one thousand nine hundred and twenty-nine and of the Independence of the United States of America the one hundred and fifty-third.

Thomas E. Robertson, Commissioner of Patents.

Attest: D. E. Wilson, Chief of Division. (Seal.)

[fol. 366] Translation of French Patent No. 127,180 of October 28, 1878, to Ader for an Electrophonic Loud-speaking Receiver

In my former patents I have designated by electrophony the new application of electricity to vocal correspondence and I have called the instruments which serve to realize the same Electrophones.

This word, it seems to me, is more suitable than the designations of telephone and microphone.

Electrophony has two parts: transmission and reception.

In the specification which follows I will deal only with the new receiver designed for audition at a distance without it being necessary to apply it to the ear.

This instrument is completely independent of the patents which I have previously taken out; it may have as a transmitter any one of the known systems which it is thought proper to employ.

Before describing the apparatus I believe it will be well to give a summary of my recent researches in electrophonic reception so as to more clearly emphasize the importance of the invention and to characterize it sufficiently.

Hitherto we have not been agreed on the true cause of the reproduction of sound by electrical means; as for me I believe that they are due simply to the differences in the attractions of the armatures by the electromagnets.

Taking this idea as a starting point I have sought for the means of rendering these differences in attraction as great as possible in order to then transform them into vibrations in the air.

[fol. 367] Like everyone I believed that the electromagnets must produce the maximum of vibratory effects when they were large and loaded with wires as is

2

the case in the attractions of balls in telegraphy. That is a great mistake as will be seen. If against a diaphragm of very taut parchment on a drum head an armature is fitted and if before this armature there is placed an electromagnet, both of the height customary in telegraphy we have a receiving apparatus; when the transmitter operates this receiver faithfully renders the sounds which are sent thereto but the ear must be put against the diaphragm to perceive them.

If this armature is replaced by another smaller one, keeping the same electromagnet, sounds much more distinct are obtained.

Finally if there is attached to the diaphragm an exceedingly light armature weighing but a few hundredths of a gram and if there is placed before it a selected very small electromagnet the bars of which are only 1 millimeter in diameter sounds will be obtained quite strong enough to be heard at a distance.

In making use of a very thin diaphragm the sounds are still further reinforced and the more this diaphragm is stretched the more the sounds are intensified.

A diaphragm of large surface of about 40 centimeters in diameter gives strong sounds but a little confused; a diaphragm of smaller diameter, about 3, 4 or 5 centimeters [fol. 368] gives very distinct sounds but less strong; the average diaphragms of 10 to 20 centimeters diameter are those which operate the best.

During these operations the same transmitter and the same battery have been employed.

It follows from these experiments that to make receivers capable of giving the greatest effects possible it is necessary to have essentially:

1. Diaphragms as taut as possible and very thin.
2. Very light armatures.
3. Very small electromagnets and in proportion to their armatures.

3

These three conditions are the three principal features of the new receiving apparatus which is the object of the present patent.

The drawing indicates two types of receiver; one, figs. 1 to 3, has but a single electromagnet, the other, figs. 4 and 5 has several of them.

For vocal communication at a distance less than 1 kilometer the receiver with a single eelctromagnet will be sufficient but for great distances a receiver with several small electromagnets must be used so as to have in the wires of all the coils as much resistence as in the conductive wire of the line. This will be very easily obtained with a very thin wire and a certain number of electromagnets.

The number of these small electromagnets for each diaphragm is therefore not limited; it may vary from one to as many as the length of the line may require and the [fol. 369] source of electricity render necessary; they may be placed at will against the diaphragm, either round or otherwise.

The diaphragms will be of thin animal or vegetable parchment, kept very taut by any means on a drum-head frame.

The very light armatures are wedged or hooked against the diaphragm.

The small electromagnets will be arranged opposite their armature so that they can be brought up or removed by the recoil screw.

The question of the smallness of the dimensions of the electromagnets which here plays the principal role requires an explanation; it has its maximum and minimum; as a

4

maximum it may give about 4 or 5 millimeters diameter to the bars and 2 or 3 grams weight to the armature; as a minimum it is possible to construct very small electromag-

smallest sizes

nets; however the [last numbers]* of the fine covered wires limit this reduction in size to about 12 mm. diameter for the bar.

Above this maximum the sound effects diminish considerably; below on the contrary they become accentuated according as the dimensions are reduced.

[*Words and figures enclosed in brackets erased in copy.]

In short, the most favorable dimensions to adopt are those for electromagnets of 1 to 2 mm. in diameter for the bars and for armatures the weight of 1/10 to 1/100 of a gram.

The patent is to protect only the system comprising the thin taut membrane, the light armatures and the small [fol. 370] electromagnets, parts agitating the air; I claim only that.

It is understood of course that the mountings of the frame, the bodies, the stretchers, the supports or suspension of the apparatus, the frame, the sound accessories that may be added thereto as sound boxes or acoustic or harmonic horns etc. and in general the actuation of same as well as the construction method employed are all completely outside the scope of the patent

The attempt might also be made to elude the invention by changing a little the arrangements of armatures or electromagnets indicated in the drawing.

For example it would be possible as in the drawing to prolong the bars of a large electromagnet by making them thin at their extremities and placing them before a light armature or again by not attaching the armatures directly to the diaphragms and by connecting them there by a more or less complicated means: it might also be possible to group several diaphragms which would be equivalent to the combination of several apparatus etc., but all these arrangements and others too although they give appreciable results

are not as good as that of the drawing in view of its simplicity and furthermore there would always be the use of small bars and small armatures, new means forming part of the patent.

To avoid any dispute I claim each of the new means of the system separately or as a whole.

[fol. 371] Fig. 1 receiver with a single small electromagnet seen in section.

Fig. 2 receiver with single small electromagnet seen from in front.

Fig. 3 receiver with single small electromagnet seen in section.

Fig. 4 receiver with several small electromagnets seen in front.

Fig 5 receiver with several small electromagnets seen in section.

M, thin diaphragm, part claimed.

E, small electromagnet, part claimed.

A, very light armature, part claimed.

B, terminals, part outside the patent.

C, crown support, part outside the patent.

H, frame with locking screw, part outside the patent.

R, case holding the diaphragm, part outside the patent.

S, pedestals or supports, parts outside the patent.

V, recoil screw, part outside the patent.

T, frame, part outside the patent.

Tr/CP.
2/2/26.

[Endorsed:] Filed Apr 9, 1929. Paul P. O'Brien, Clerk.

(Here follow title page and pages 243 and 244 of "Talking Machine News," side folios 372, 373, and 374)

[fol. 375] DEFENDANTS' EXHIBIT No. 12

[Endorsed:] No. 1726. United States District Court. Defts. Exhibit No. 12. Filed 5/10/28. Walter B. Maling, Clerk. By A. C. Aurich, Deputy Clerk

No. 5712. United States Circuit Court of Appeals for the Ninth Circuit. Filed Feb. 5, 1929. Paul P. O'Brien, Clerk.

(Here follows drawing, side folio 376)

[fol. 377] United States Patent Office

John E. Dann and John Lapp, of Honeoye Falls, New York

Telephone-Transmitter

Specification Forming Part of Letters Patent No. 338,660, Dated March 23, 1886. Application Filed December 24, 1885. Serial No. 186,644. (No model)

To all whom it may concern:

Be it known that we, John E. Dann and John Lapp, citizens of the United States, residing at Honeoye Falls, in the

Talking Machine News

VOL. V. No. 60. JULY, 1907. ONE PENNY; POST FREE 2d.

American Talking Machine Company

for

EVERYTHING

in the

PHONO LINE.

OUR SPECIALITIES.

T. A. EDISON
ZONOPHONE
STERLING
EDISON-BELL
COLUMBIA "Symphonic" and WHITE

RECORDS

WE STOCK EVERY TITLE OF THE ABOVE MAKES.

WE SUPPLY EVERYTHING FROM A NEEDLE TO THE MOST ELABORATE OUTFIT.

Send Trade Evidence for our Illustrated 72 Page Catalogue.

31, TABERNACLE ST., E.C.

Telephone: 3293 Central.
Tel. Address: "Talkative London."

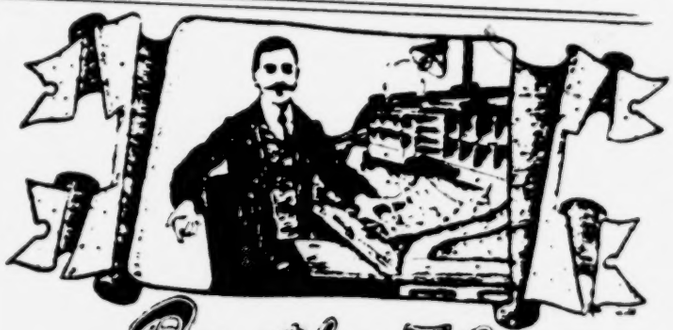

By the Way

SOMEONE has been hoaxing the "Sketch," I should say. That admirably illustrated paper recently contained a paragraph stating that the one and only Edna was annoyed at the statement that she had refused a fee of One Thousand Pounds to make a record of "Follow On" on "General Booth's gramophone." What she winced at, it seems, was not at the report that the offer had been made but at the amount stated. For it was Two Thousand, not One Thousand pounds she had refused! The funny thing about it is that when a member of this staff called at the Salvation Army Headquarters they had never heard of any offer of the kind having been made. In fact, I believe the officer in charge chortled at the idea of it. And I don't wonder, because as you will remember though the "Sketch" didn't Edna took the town in the Belle of New York, with, not to put it too bluntly, a travesty of the Salvation Army lassie. So that the Army would be sure, wouldn't they, to ask her to make a record for them? Yes; I am very much afraid someone has hoaxed the "Sketch" pretty badly.

* * *

THE gazetteer describes Hayes, Mdlx., as a village three-and-a-half miles from Uxbridge and its staple trade as fruit-growing and agriculture. But I looked in vain for Hayes the other day, as I passed in the train the place where it once was. It was as though it had never been. It was obliterated, hidden away by a gigantic legend in black and white which informed

THE "VIBRATOPHONE": A NEW PHONOGRAPH.

By Sydney G. Starling, B.Sc., A.R.C.Sc., F.Phys.S., and W. Cole, F.L.S.

We have devised a new form of phonograph which appears to be of sufficient scientific and general interest to merit a description in the pages of the TALKING MACHINE NEWS. The attachment was originally intended for use with a Pathé "Perfecta," and it is so simple that it may be made in half-an-hour at a cost of material that can only be reckoned in farthings.

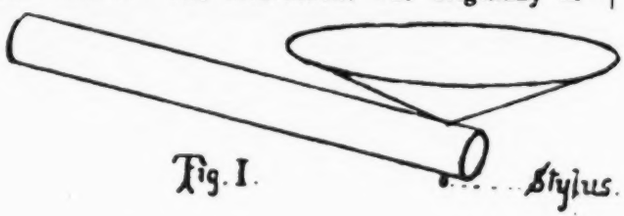

Fig. 1.

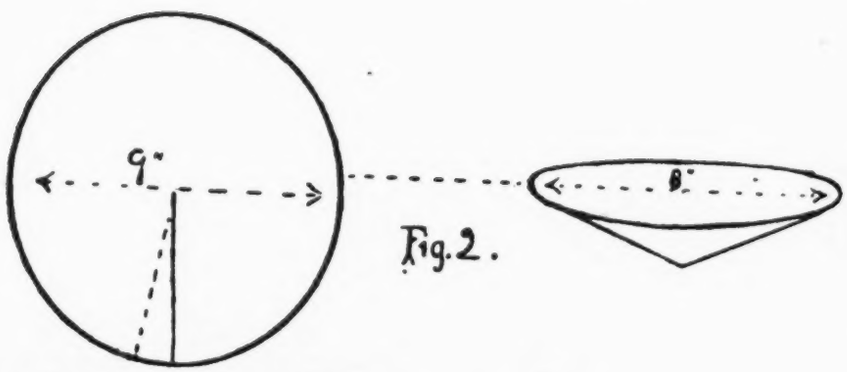

Fig. 2.

It consists of a low cone of cartridge drawing-paper 8 inches in diameter, and about 2½ inches high. This may easily be obtained by making a circle of the paper and cutting out a segment, as shown in Fig. 1, then bending the cone into shape, and securing with wax or cement. This paper cone is attached at the apex with wax or seccotine to a tube of millboard or cardboard, such as those sold by stationers for posting drawings and maps. This tube may be about 2 inches in diameter, and for fitting to the "Perfecta" it should be at least 12 or 13 inches long. The tube is open at both ends, and at the end immediately under the point of the paper cone, but, of course, on the opposite side of the tube, is fixed with wax or other cement a ball-stylus or sapphire. Our styli are made from thin rods of glass drawn out and fused in a spirit lamp, so as to form a thin thread of glass with a little spherical end, care being taken to get the ball of the right size, and with perfectly polished surface. A real sapphire stylus would doubtless be best.

Near the other end of the cardboard tube a hole is drilled to allow of the insertion and screwing fast of the little jointed rod by which the horn of the "Perfecta" phonograph is balanced on the guide-rod of the Orpheus attachment. The construction and mode of fixing up our device will easily be followed by an inspection of figures 2 and 3.

Some little judgment must be exercised in fitting up the apparatus to allow the tube to travel on the record from end to end without touching the wires of the Orpheus attachment.

Our object in the first place was to produce a diaphragm which should be large and rigid enough to set sufficient air in vibration to produce audibility without the intervention of a trumpet; our paper cone must be looked upon as a modified diaphragm and not in any sense a trumpet. It was intended in this way to avoid the distortion of the sound waves which

Fig. 3.

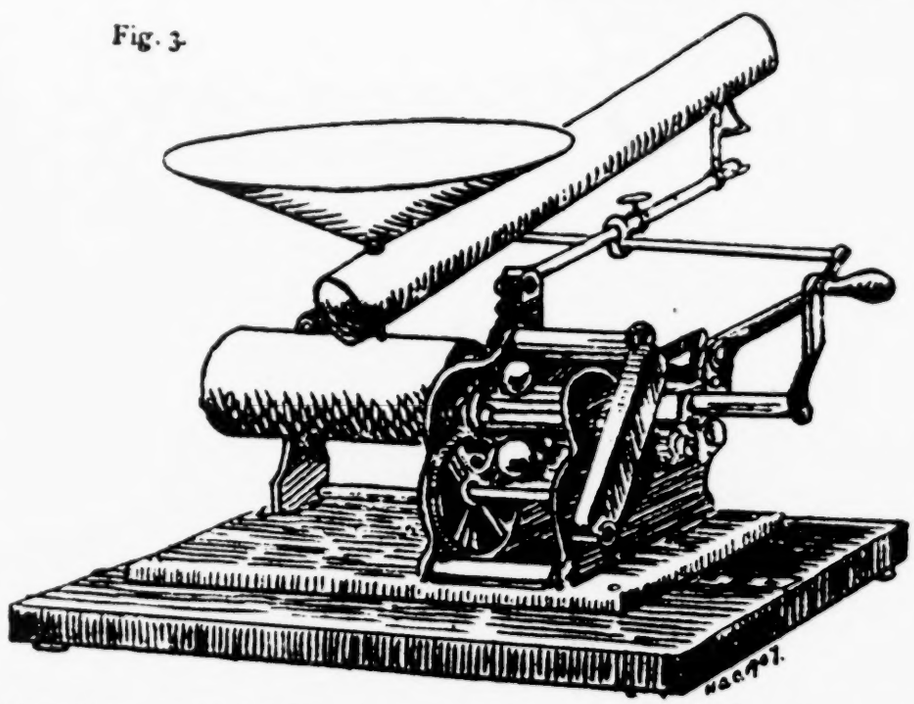

must occur in the cavity of the reproducer and horn, which cavity has such a complex shape that it is almost impossible that all the overtones of any note or sound should be reproduced with their intensities in the same proportion as in the original sound. In fact the cone in our arrangement behaves to the record and the style as the sounding board behaves towards a vibrating string. If the board is rigid and encloses no complex air space its vibration is a good copy of the vibration of the string; it merely serves to set more air in motion than the string alone could do. Thus our cone must have only sufficient curvature to give it rigidity. A perfectly rigid weightless plane would be an ideal form for the cone to take. The cardboard cylinder forms a convenient and efficient support for the cone, but whether it plays any acoustical part in the reproduction is an open question.

The sound, though much less intense than that produced by the ordinary method, is yet very pleasing and correct. The result is particularly good with low volume "home records," and to our ears the characteristics and timbre of the reproduction are pure and natural.

Although our experiments have been made with the "Perfecta" it would be easy to adapt the "Vibratophone" to other styles of machines. We appear to have selected roughly good sizes of cone and tube, still there is doubtless room for experiment in the selection of diameter and length. Celluloid and cardboard have been tried for making the cone, but in our experience paper is by far the best material.

The "Vibratophone" (to christen the little device) appears to have some practical uses beyond its scientific interest. It would serve excellently to try over records without disturbing others in the house when they need to be repeatedly played as in the study of folk-songs and language lessons by aid of the phonograph.

FORTHCOMING REDUCTION IN PRICE OF THE EDISON RECORD.

An official announcement, which has been sent out by the National Phonograph Co., Ltd., to dealers selling their records, will be found in another part of this imprint. On and after August the 6th they are to be sold to the public at a shilling, instead of eighteenpence, as heretofore. It affords us much pleasure to be able to congratulate this Company on their latest move, which we think is a statesmanlike one. The reduction has been generally anticipated by the trade for a long time past as inevitable, but it is not everyone who has the good sense to know when to bow before the inevitable. There are, of course, an abundance of sound reasons for reducing the price by one-third. Competition, as between the record manufacturers, grows more and more acute day by day. And there can be no doubt that this Company must have been handicapped for some time past by the fact that many millions of excellent records were to be bought and were being sold at a shilling, whilst the price of this record remained at eighteenpence. We regret that the Company should not have supplied us with a copy of the notice. It should be obvious that such a reduction was bound to come to our knowledge and was a fit subject for treatment in these columns. It was doubtless an oversight on their part that we should have been compelled to procure a copy of the document from another source. Because the futility of trying to keep the matter a secret so far as we are concerned is obvious to the meanest intelligence. That foolish bird the ostrich is wont, as has often been remarked, to hide its head in the sand upon the approach of the sportsman, under the persuasion that it will not then be seen.

The reputation which the National Phonograph Company have acquired for business acuteness makes it quite plain that they cannot have intentionally adopted this policy towards the "Talking Machine News." Especially as the notice, as our readers will appreciate, has a special interest for ourselves, since as long ago as February, 1906, we stated in these columns that a rumour was current at that time that a reduction in the price of "Edison" records was likely to take place. We may therefore claim, in spite of the fact that the statement was made the subject of an action for libel against us by this company, which for reasons best known to themselves was subsequently settled by them paying the entire costs, that we did in fact anticipate in advance what has now taken place. A letter will be found in this issue from a dealer drawing attention to what he considers the defects in the conditions of the notice. He points out that the allowance is only made on condition of further purchases being made during the slackest time of the year. This certainly seems a weak point, and we should be inclined to think that a more generous treatment would have been more profitable in the long run. Orders, so runs the clause, must be placed with the factors during the next five months ending with October 31st, 1907. And with so sweeping a reduction of price it does seem hardly the thing to speak of the allowance as a "gratuitous one." It is doubtless true that no legal obligation lay with the Company to make any allowance at all, but there are other obligations besides these, which are necessary if one would preserve a good understanding with one's clients. We would suggest that there is still time to issue a fresh notice modifying the first, for there can be no doubt that in some respects it has not produced an agreeable impression upon the trade as a whole. We note the announcement that the price of Edison machines remains the same.

PASTIMES, LTD., is a place where one can comfortably while away a leisure hour. Situated about a stone's-throw from Charing Cross, it is easy of access to pleasure lovers, theatre lovers, and lovers of every category. One of the most attractive features is an automatic contrivance whereby the eye and ear are mutually delighted by a phono-mutoscope, whilst downstairs there is an athletic room affording exercise and relaxation to those disposed that way.

Mme. Roger Miclos, whom Rubinstein praised, has made a number of piano records for the Fonotipia Company. The special list of them which has been issued comprises five double-sided discs.

(No Model.)

J. E. DANN & J. LAPP.

TELEPHONE TRANSMITTER.

No. 338,660. Patented Mar. 23, 1886.

Fig. 1.

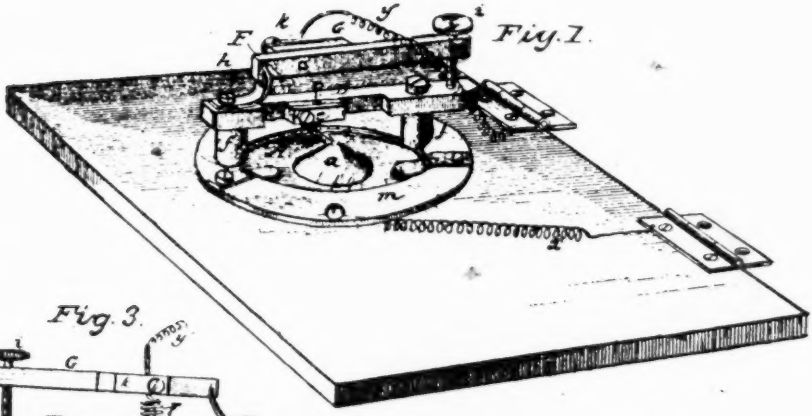

Fig. 3.

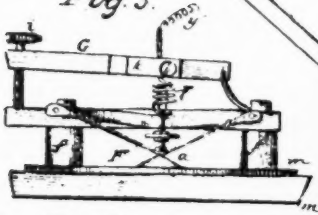

Fig. 2.

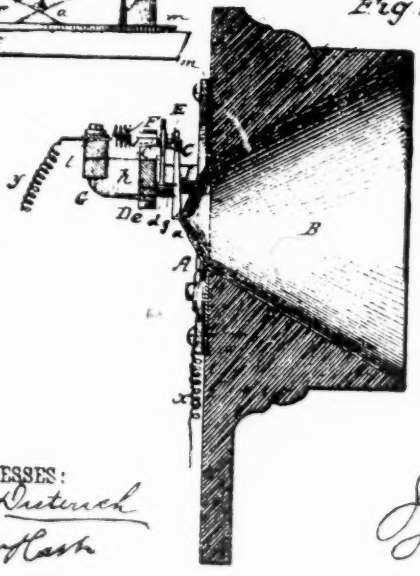

Fig. 4

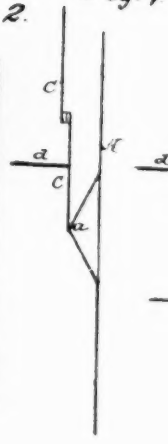

Fig. 5.

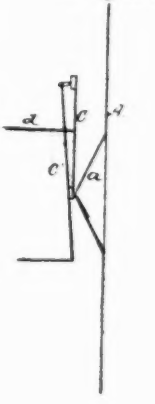

Fig. 6

WITNESSES:

Fred. G. Dieterich

Amos W. Cass

INVENTOR:

John E. Dann

John Lapp

BY Munn & Co

ATTORNEYS.

county of Monroe and State of New York, have invented a new and useful Improvement in Telephone-Transmitters, of which the following is a full, clear and exact description.

Our invention is an improvement in the class of transmitters having vibrating electrodes arranged adjacent to and one of them normally pressing upon the diaphragm, and in some cases attached to it.

The object we aim at and have attained is the production of a loud-speaking instrument capable of operating with a minimum expenditure of battery-power or electro-motive force.

To this end we have devised a new and simple construction of the diaphragm, and and also provided a new and improved mechanism for co-operating therewith, as hereinafter fully described.

In the accompanying drawings, Figure 1 is a perspective view of our invention applied to the door of a transmitter-box. Fig. 2 is a central cross-section of the same. Fig. 3 is a side view of a portion of the mechanism, Figs. 4 and 5 illustrate modifications. Fig. 6 illustrates a defective operation of the ordinary diaphragm employed in telephones.

The sheet-metal diaphragm A is constructed with a central conical portion, a, which may be formed integral therewith or made separately and attached by solder, brazing, or in any other suitable manner. The diameter of the base of the hollow cone may be varied considerably; but we prefer it shall equal and even slightly exceed that of the contiguous inner end of the mouth-piece B, of which it forms practically a conical extension. By this construction and combination of parts the whole force of the air-current or sound-waves from the mouth of the person speaking into the instrument is concentrated on the cone—that is to say, on the central portion of the diaphragm—thereby producing the maximum effect in respect to the required vibration of the latter, and the transmission of sound with corresponding loudness, force, and precision.

A lever, C, which constitutes one of the electrodes, is permanently attached to the apex of the cone a through the intermediary of a spring or other device which will allow the lever to vibrate within certain narrow limits. The lever may, however, be rigidly attached to the cone, and in that case of course the diaphragm must yield enough to permit

due vibration of the lever. The fulcrum of the latter is a spring or flexible plate, d, which is held adjustably by a clamp, e, to a fixed bar, D, supported by posts f. A shorter lever, C, is arranged parallel to and in front of the former, C, and also attached to its middle portion by short spring, g, which constitutes a yielding fulcrum that permits slight movement of such shorter lever toward and from the other. The outer or free end of this lever C″ has an eye or socket that holds the other electrode—to wit, a short metallic pin, E. The latter is suitably insulated in the socket by rubber or equivalent means. The inner end of the pin E rests normally in light contact with the free end of lever C, and it is the vibration of these two parts C and E, corresponding exactly to the vibration of the diaphragm, that effects the transmission of speech.

It is obvious that the contact points or electrodes proper may be multiple instead of single, although we prefer and intend to use the latter.

When a current is sent through a freely-suspended carbon electrode, it is repelled somewhat from an opposite electrode. We utilize this principle of replusion as an aid in avoiding the "stick," which two metallic electrodes exhibit, by inserting a piece of carbon in the outer or free end of the lever C, so that the metallic electrodes rests in contact therewith, instead of with the lever proper. By this means rapidity of vibration of the electrodes is efficiently promoted, and the instrument thereby adapted to transmit speech with greater fidelity and speed.

As a means of support and adjustment for the pin-electrode C, we connect it by means of a spiral spring, F, with a lever, G, which is arranged parallel with the fixed bar D, and attached to it by a flexible fulcrum-piece, h. Said lever is provided with a screw, i, at its opposite or free end, for adjusting it closer to or farther from the bar D. A screw-clamp, k, secures the spring E to the lever, and it is suitably insulated by a rubber block l.

[fol. 378] In practice the diaphragm A and spring F are connected by wires x y with the primary of an induction-coil and with a battery, neither of which is shown in the drawings; or the instrument may be set in a battery-circuit with an intensity-coil properly connected with the line-wire. When a sound-wave strikes upon the diaphragm, its main

force is concentrated at the center, which is capable of the greatest amplitude of vibration, and the consequent movement of the diaphgram is transmitted to the electrode-lever C, so that the free end of the latter vibrates with a greater amplitude than the diaphragm, owing to the fulcrum d being nearer the end attached to the cone a. This vibration of the lever-electrode C effects the transmission of sound through the receiving instrument at the other end of the line.

In addition to the function of the cone a in concentrating the sound-waves, as above stated, it has a still more important one, which we will explain as follows: When a sound-wave strikes upon a diaphragm of the usual form with whose center an electrode rests in contact, the latter resists more or less the tendency of such central portion to yield and assume a concavo-convex form, and consequently the portion surrounding the center yields first, as illustrated in an exaggerated way in Fig. 6, in which A' indicates the diaphragm and C'''' an electrode. The result is a failure to transmit and reproduce sound with the desired loudness and accuracy; but by use of the cone a this defect is avoided, since the air-wave pressure forces back the cone or central portion of the diaphragm before or else simultaneously with the portion that surrounds it. In other words, the diaphragm vibrates with the freedom and in the manner required to produce, in connection with the other mechanism employed the desired perfection of result.

A still further advantage attends the use of the cone, since it is capable of withstanding the pressure and thrust to which it is subject in acting on the attached lever, and hence the diaphragm is made correspondingly more durable than if constructed in the usual form.

In further relation to the cone a we desire it to be understood that while it is desirable and even necessary that its inner side shall be open, as shown, in order to produce the best result, yet we do not propose to here limit ourselves to such construction, since a good degree of success may be attained by closing the base of the cone—that is to say, by employing a diaphragm of the ordinary form and attaching a hollow cone to its center.

Our improved diaphragm is applicable to other telephonic instruments beside transmitters.

In respect to adjustments it may be stated that the spring-fulcrum d of the inner lever-electrode, C, is properly adjusted when the apparatus is prepared or "set up" for use. The lever G is adjusted by screw i to increase or lessen the tension of the spring F, and thereby regulate the contact-pressure between the electrodes E C, as required for the desired perfection of operation.

In practical operation of the instrument a metallic sound arises from the molecular or mechanical vibration of the movable parts, particularly the electrode-levers and the spring F. To quickly destroy such vibration we employ elastic bands, Fig. 3, which are stretched between suitable points of attachment and press lightly on the spring and pin-electrode E and both levers C and C', as shown. It is also expedient to employ dampers or elastic pressure-plates, as shown in the drawings, to limit the vibration of the diaphragm, and thus choke out the metallic clang.

We do not propose to limit our invention to the described and preferred arrangement of levers shown, since various others are practicable. As an example, the outer electrode might be attached to the lower end of a metal strip of bar, C, as shown in Fig. 4, and said bar may be a spring, or it may be inelastic, and in the latter case the action of gravity would be depended on to hold it in light contact with the other electrode, C'.

Fig. 5 illustrates still another arrangement, wherein both levers C C' are attached to the cone, which thus acts directly on both when vibrated.

We are aware that a diaphragm having a conical portion with a surrounding annular part which is curved transversely (or in cross-section) has been suggested or employed, and we therefore restrict our claim to the precise construction of our diaphragm, which experiment has demonstrated to be advantageous.

We propose to file another application in which the function and advantages of a carbon electrode in transmitters of this particular class shall be fully described, and in which it shall be claimed more broadly than in this application.

What we claim is:

1. The diaphragm having a central hollow cone and a surrounding annular part, all portions of which are flat or

DEFENDANT'S EXHIBIT No. 19.

W. H. DAVIS AND F. E. JOSS.

ACOUSTIC DIAPHRAGM.

APPLICATION FILED MAY 13, 1918.

1,389,632. Patented Sept. 6, 1921.

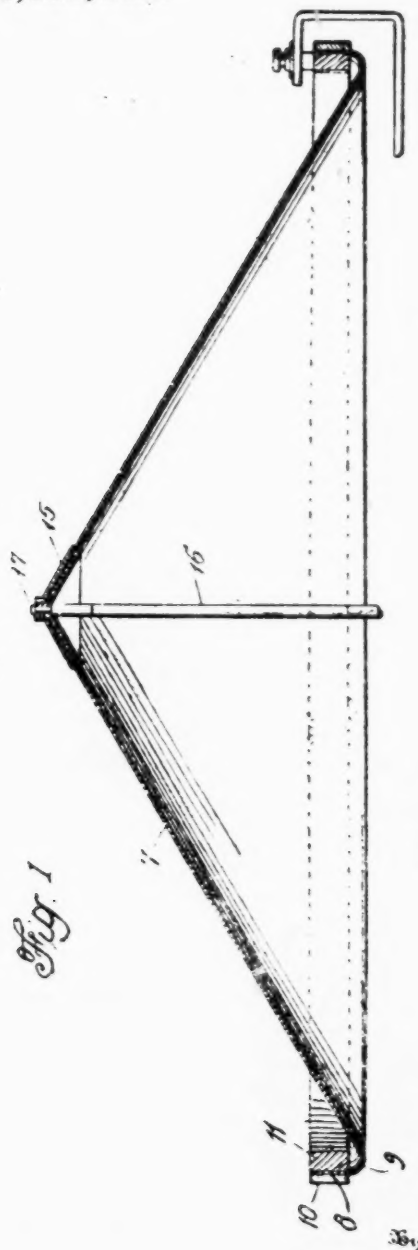

Fig. 1

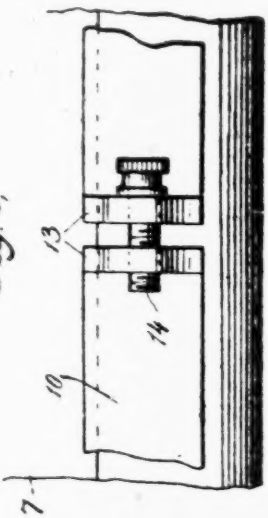

Fig. 3

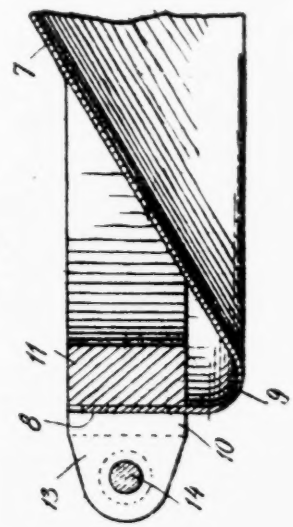

Fig. 2

Inventors
William H. DAVIS
Fredrick E. JOSS

By their Attorneys
Pennie, Davis, Marvin & Edmonds

lie normally in the same plane, said diaphragm being free to vibrate, as shown and described.

2. The combination, with the diaphragm and its central hollow cone, of electrode-*d*evers having yielding fulcra, and one of them attached to said cone, substantially as shown and described, to operate as specified.

3. The combination of the spring F with the connected electrode-levers, the spring or elastic fulcra therefor, the diaphragm having a hollow cone to which one of said levers is attached by a yielding connection, all as shown and described.

4. The combination of the spring F with the pin-electrode, the lever C, and the cone-diaphragm, substantially as shown and described.

5. In a telephone of the character hereinbefore specified, [fol. 379] the combination, with the diaphragm and an electrode, E, of the lever C, connected with the diaphragm and carrying a carbon contact-point.

6. The combination, with the diaphragm and the lever-electrode C, attached thereto, and the spring-fulcrum d therefor, of the electrode C′ and its spring-fulcrum g, substantially as shown and described.

7. The combination, with the diaphragm and the vibrating lever-electrode C, attached thereto and having a spring-fulcrum, of the second electrode-lever, C, and a spring-fulcrum therefor, which connects it with the other, C, at a point between the fulcrum and free end of the latter, as shown and described.

8. The combination, with the diaphragm, the electrode-levers, the spring F, and a fixed bar, D, of the adjusting-lever G and the screw i, all arranged as shown and described to operate as specified.

John E. Dann, John Lapp.

Witnesses: Amos W. Hart, P. B. Turpin.

(Here follows drawing, side folio 380)

[fol. 381] United States Patent Office

William H. Davis, of Bronxville, and Frederick E. Joss, of Brooklyn, New York, Assignors to Lektophone Corporation, a Corporation of Delaware

Acoustic Diaphragm

Specification of Letters Patent

1,389,632 Patented Sept. 6, 1921

Application Filed May 13, 1918. Serial No. 234,104

To all whom it may concern:

Be it known that we, William H. Davis and Frederick E. Joss, both citizens of the United States, residing at, respectively, Bronxville, county of Westchester, State of New York, and borough of Brooklyn, county of Kings, city and State of New York, have invented certain new and useful Improvements in Acoustic Diaphragms; and we do hereby declare the following to be a full, clear, and exact description of the invention, such as will enable others skilled in the art to which it appertains to make and use the same.

This invention relates to acoustic diaphragms, and in particular to diaphragms of the type which, while capable of use in other and different apparatus and for different purposes, are designed primarily for installation in talking machines of the general character disclosed in the patent to Marcus C. Hopkins No. 1,271,527.

According to the disclosure in said application, the diaphragm is of such a nature as to effect the direct propagation, in free air, from a record or equivalent element subjected to the action of the original sound waves or vibrations, of self-sustaining sound waves substantially corresponding in intensity and amplitude, as well as in pitch and timbre to the said original sound waves, as distinguished from an initial generation of violent air disturbances in a small, confined space, and a subsequent transformation of such disturbances into self-sustaining sound waves by means of a megaphone, horn or like amplifier. The diaphragm is of relatively great area and of conical form, terminating at its base in a supporting rim or flange, and is rigidly

mounted at its said rim; the shocks or vibrations being transmitted, by suitable means or devices, to the diaphragm in the direction of its apex, so that the entire conical portion is caused to move bodily.

The object of the present invention is to improve a diaphragm of this character, by so constructing it as to reduce to a very large degree, if not entirely, the possible distortion of the vibrations transmitted to or imparted by, the diaphragm, due, in part, to the direct and rather rigid connection of the base of the cone to the supporting rim or flange, (which has the effect of somewhat damping the vibrations), and, in part, to the cone base itself, which may, perhaps, exert a similar action, but in less degree, by reason of such connection. This object is effected by avoiding the direct connection just referred to, and, instead, joining the base of the cone to the supporting rim or flange by a curved, open-topped trough, which provides a resilient mounting for the cone and is constructed and arranged in such a way as to destroy distortive action due to the presence of the rim and at the same time to resiliently support the cone itself. The supporting rim for the outer edge of the conical diaphragm comprises a pair of concentric nesting rings, which are arranged to grip the outer edge of the conical diaphragm and support it, so that the said outer edge is substantially vertical. The degree of resiliency that is given to the open topped trough may be regulated by clamping more or less of the outer edge of the conical diaphragm between the nested rings.

Referring now to the drawings which illustrate one embodiment of the invention, Figure 1 is a sectional view taken through the axis of the cone; Fig. 2 is a fragmentary sectional view showing a detail of the supporting rim and associated parts of the cone; and Fig. 3 is a front view of a detail.

Referring more particularly to said drawing, 7 indicates, generally, the conical portion of the diaphragm, and 8 its supporting rim or flange, these two parts being separated or spaced from each other by the intermediate, open-topped annular trough 9, hereafter more fully described. The rim 8 of the cone is clamped between a pair of concentric nested rings 10 and 11, so that it is substantially parallel to the axis of the cone and is substantially vertical as seen in the

drawings. The outer ring 10 is provided with a pair of terminal flanges 13 provided with cooperating threaded apertures in which an adjusting bolt 14 engages. It will be apparent that through manipulation of this bolt 14 the clamping action of the two rings may be regulated and the area of the rim 8 that is gripped between the two rings readily adjusted. The cone 7 has secured to its apex a cap 15, preferably consisting of two conical members located upon opposite sides of the cone and having a threaded connection which enables them to be tightened together so as to [fol. 382] grip the material of the cone between them. Any suitable connecting device may be employed for transmitting from the record or its equivalent to the diaphragm, or vice versa, the sound waves to be reproduced, or recorded, such connection being here shown, as embodying a rod 16, one end of which is fastened to the afore-mentioned cap by a screw 17.

The cone, trough and rim are preferably constructed from a single piece of material, which should be crisp, strong and suitably rigid or stiff, yet light and vibratile, and with as little inertia as possible, hot compressed paper or other fibrous material of like character having been found to answer the purpose satisfactorily. The cap 15′ is made of extremely light and very rigid metal.

As is apparent from Fig. 2, the wall of the trough 9 is made appreciably thinner than the wall of the cone itself and the rim 8. The thinning of the lower portion of the cone wall may be so carried out that said wall is gradually and inappreciably increased in thickness as it rises from the trough until a point is reached which is at some considerable height above said trough.

This thinning of the trough (and of the cone wall if adopted) is effected after the diaphragm has been formed, and constitutes an important feature of the invention, since because of it the resilience of the trough with relation to the rim is increased beyond the normal, so that the cone is rendered responsive to virtually the maximum degree to the vibrations imparted to it and is enabled to move sharply and bodily at each vibration, while returning, or tending to return, to its normal position immediately at the conclusion of its movement in one direction. this being due to the crisp, resilient nature of the material of which the diaphragm is made. The "normal" resilience above referred to is in-

tended to indicate the degree of resilience which the trough would possess if its thickness were constant throughout and were the same as the thickness of the rim and the cone. Consequently, the distortion to which the sound waves would otherwise be subjected, is avoided, owing to the removal of the damping action exerted by the rim upon the vibrations, as has already been explained. The resiliency imparted to the vibrating cone is regulatd by clamping more or less of the rim 8 of the cone between the nested rings 10 and 11. Thus, when the rim is inserted to its full, or nearly its full, extent between the rings, the trough is brought closer to the bottom of said rings and is, in consequence, held more rigidly than is the case when only a comparatively small portion of the rim lies between the rings. In the latter case, the extent of the exposed portion of the rim is such as to allow the trough relatively great freedom of movement, and the resiliency of the mount is proportionately increased.

We claim:

1. An acoustic diaphragm, comprising a central, vibratile cone, an annular supporting rim encircling said cone at the base thereof, and an annular trough between said cone and said rim and providing a resilient mounting for the former; and a support for said diaphragm comprising a pair of nested rings between which said rim may be inserted to different extents to vary the resiliency of said trough with relation to said rim.

2. An acoustic diaphragm, comprising a central, vibratile cone, an upstanding supporting rim encircling said cone at the base thereof, and an annular trough connecting the lower portion of said rim and said cone base and providing a resilient mounting for the cone; and a support for said diaphragm comprising a pair of nested rings between which said rim is rigidly held.

3. An acoustic diaphragm, comprising a central, vibratile cone, an annular supporting rim encircling said cone at the base thereof, and an annular trough between said cone and said rim and providing a resilient mounting for the former; a support for said diaphragm comprising a pair of nested rings between which said rim is inserted; and means providing for a relative adjustment between said rim and said rings, to vary the degree of resilience of the mounting.

William H. Davis, Frederick E. Joss.

[Endorsed:] No. 1726. United States District Court. Lektophone vs. Rola. Defts. Exhibit No. 19. Filed 5/10/28. Walter B. Maling, Clerk. By A. C. Aurich, Deputy Clerk

No. 5712. United States Circuit Court of Appeals for the Ninth Circuit. Filed Feb. 5, 1929. Paul P. O'Brien, Clerk.

(Here follows drawing, side folio 383)

[fols. 384 & 385] DEFENDANT'S EXHIBIT No. 34

[Endorsed:] No. 1726. United States District Court. Defts. Exhibit No 34. Filed 5/11/28. Walter B. Maling, Clerk. By A. C. Aurich, Deputy Clerk.

No. 5712. United States Circuit Court of Appeals for the Ninth Circuit. Filed Feb. 5, 1929. Paul P. O'Brien, Clerk.

[fol. 386] SUPREME COURT OF THE UNITED STATES

ORDER ALLOWING CERTIORARI—Filed January 27, 1930

The petition herein for a writ of certiorari to the United States Circuit Court of Appeals for the Ninth Circuit is granted. And it is further ordered that the duly certified copy of the transcript of the proceedings below which accompanied the petition shall be treated as in response to such writ.

Endorsed on cover: File No. 34,651. U. S. Circuit Court of Appeals, Ninth Circuit. Term No. 520. Lektophone Corporation, petitioner, vs. The Rola Company. Petition for writ of certiorari and exhibit thereto. Filed December 16, 1929. File No. 34,651

DEFENDANTS EXHIBIT D 4

United States Federal Record

No. 1726

Deft's Current No. 34

Filed 5/11/28

WALTER B MALING Clerk

By A C Aurich Deputy Clerk

No.

UNITED STATES CIR

FOR THE

FIL

FEB 5

PAUL P

FILE COPY

Office Supreme Court
FILED
DEC 16 19
CHARLES ELMORE C

Supreme Court of the United States

OCTOBER TERM, 1929.

No. [redacted] 19

LEKTOPHONE CORPORATION,
Petitioner,

vs.

THE ROLA COMPANY,
Respondent.

PETITION FOR WRIT OF CERTIORARI TO THE CIRCUIT COURT OF APPEALS FOR THE NINTH CIRCUIT, BRIEF IN SUPPORT THEREOF and APPENDIX.

CHARLES E. HUGHES,
WILLIAM H. DAVIS,
Counsel for Petitioner.

GALLO & ACKERMAN, Inc., 142 Liberty Street, 'Phones—Hitchcock 3078-9.

INDEX.

PAGES

Petition for Writ of Certiorari 1

Introduction 1
Grounds for Petition 1
The Subject Matter Patented 2
The Issues as to Which the Conflict Exists 3
United States Litigation 7

Motions for Preliminary Injunction 7

Foreign Litigation 8

Brief in Support of Petition 9

Appendix (Decision of the Circuit Court of Appeals for the Third Circuit in Lektophone Corporation vs. Brandes Products Corporation) 11

CASES CITED.

Bone vs. *Marion County*, 251 U. S., 134 ..... 9, 10
Hildredth vs. *Mastoras*, 257 U. S., 27 ..... 9, 10
Holland, etc., Co. vs. *Perkins, etc., Co.*, 277 U. S., 245 ..... 9, 10
I. T. S., etc., Co. vs. *Essex, etc., Co.*, 272 U. S., 429 ..... 9, 10
Sanitary, etc., Co. vs. *Winters*, not reported 9, 10
Temco, etc., Co. vs. *Apco, etc., Co.*, 275 U. S., 319 ..... 9, 10
Weber, etc., Co. vs. *Freeman*, 256 U. S., 668 ..... 9, 10
Winters vs. *Dent*, not reported 9

IN THE

Supreme Court of the United States

OCTOBER TERM, 1929.

LEKTOPHONE CORPORATION,

Petitioner,

vs.

THE ROLA COMPANY,

Respondent.

PETITION FOR WRIT OF CERTIORARI TO THE UNITED STATES CIRCUIT COURT OF APPEALS FOR THE NINTH CIRCUIT.

To the Honorable the Chief Justice and Associate Justices of the Supreme Court of the United States:

Your petitioner, Lektophone Corporation, respectfully prays for a writ of certiorari to the United States Circuit Court of Appeals for the Ninth Circuit to review the decision of that Court in the above entitled case filed September 23, 1929 (34 Fed. [2d], 764; and R., 172).

Grounds for Petition.

A conflict as to the scope of patent claims, on substantially the same evidence of prior art and substantially the same type of accused device, exists between the Court of Appeals for the Ninth Circuit and the Court of Appeals for the Third Circuit.

The patent is No. 1,271,529, granted July 2, 1918, to Hopkins for an "Acoustic Device."

The patented acoustic device is a direct-acting, cone-type loudspeaker for phonographs and radio sets. Li-

censed, and also alleged infringing loudspeakers have been and are being manufactured and sold in large quantities in every judicial circuit in the United States.* Although some of the licensees have bought paid-up licenses, most of them are operating on a continuing royalty basis. The patent has been much litgated in this country and the corresponding patent has been much litigated abroad. The opinions of the courts in this country and abroad have been printed in a pamphlet entitled "Lektophone Litigation—Opinions and Decrees," which we have filed with the transcript of record herein. A list of the cases is printed at the end of this petition. The state of uncertainty in which the manufacturers now find themselves can be corrected only by a ruling of this Court.

The Subject Matter Patented.

The acoustic device of the patent is a mechanical combination of three elements—(1) a large paper cone which is vibrated at sound frequencies to impress sound waves directly on the air; (2) a rigid annular supporting frame, and (3) a yielding rim flexibly connecting the vibrating cone to the rigid frame.

The Court of Appeals for the Third Circuit in the *Brandes case*, 20 Fed. (2d), 155, with full knowledge of the prior art that was later considered by the Court of Appeals for the Ninth Circuit in the instant case, held the patent valid and infringed. For the convenience of this Court, the opinion in that case is printed as an appendix to the brief submitted herewith. Judge Buffington, speaking for the Court of Appeals for the Third Circuit, said (appendix, p. 13):

---

*Plaintiff's witness, Farrand, estimated that approximately 1,250,000 licensed speakers had been sold at the date of the Rola trial (May 10, 1928). Of these, approximately 675,000 were sold by licensees reporting and paying continuing royalties, and the Radio Corporation had sold a quantity estimated at 500,000 (R., 127-129).

> "To our minds, Hopkins was the first to make the combination of a conical-shaped paper device of proper size, provided with flexible edges, coupled to a rigid frame, used in free air. All of these three elements in free air, the light conical sounding-board of specified area, the flexible edge, and the rigid frame, combine to produce pure low notes. The device has come into general use, and its licensees are now supplying the public needs."

The Court of Appeals for the Ninth Circuit in the instant case, found it "unnecessary to pass upon the validity of the patent" (R., 200), but held (R., 202-3) the patent not infringed.

The Issues As to Which the Conflict Exists.

In the specific embodiment of the invention illustrated in the patent drawing (Ex. Bk., 2), the yielding rim is a flat plane peripheral extension of the paper cone.

The conflict lies in a difference of opinion of the two courts as to what is an equivalent for this flat (plane peripheral) rim extension of the paper cone.

1. The Court of Appeals for the Third Circuit in the *Brandes case* held the patent infringed by the Brandes loudspeaker, in which the yielding rim was thin, slack rubber (Appendix, p. 16), substituted for the paper rim of the specific embodiment of the patent.

The Court of Appeals for the Ninth Circuit in the instant case held the patent not infringed by defendant's loudspeaker, in which the yielding rim is "soft kid leather" (R., 175), substituted for the paper rim of the specific embodiment of the patent.

That Court expressly disagreed with the Court of Appeals for the Third Circuit, saying (R., 201): .

> "• • • we cannot follow the latter decision in so far as it holds that a flexible, non-resonant rim or annulus connecting the cone of the diaphragm to the stationary metal rim is the equivalent in a sound reproducing device of the flat rim or plane annulus of Hopkins' tympanum • • •."

2. There was a subordinate issue presented to both courts on which they likewise differed.

The patent, after pointing out (Ex. Bk., 4, lines 72, et seq.) that the tympanum consists of—

> "an annular plane peripheral portion or supporting rim *l*, the outer edge of which is tightly-gripped and rigidly supported between the rings K,K', and a central conical portion *l'* rising from the inner edge of the said rim *l*."

Adds that—

> "If satisfactory regeneration of sounds from a record or other sound vibrated element is to be had, the whole diameter of the tympanum, that is, the diameter of the aperture in the rings K,K' should exceed nine inches in order that the conditions required to regenerate the sound waves in the manner above described shall be fulfilled. The base of the central conical portion *l'* should exceed in area one-half of the effective area of the entire tympanum, that is, the area of the aperture in the rings K,K'; or in other words, the diameter of the base of the said conical portion should be at least eight-tenths of the diameter of the said aperture."

The specification goes on to say (same page, lines 77, et seq.):

"It is, of course, possible to make some variation from the approximate sizes given without materially altering the result; * * *" etc.

Claims 1, 2, 3, 5, 6 and 7 (Ex. Bk., 5) are expressly limited to a tympanum (cone plus yielding rim) "exceeding nine inches in diameter." The size of the cone is defined in these claims as "not less than eight-tenths of the diameter" of the tympanum. Claims 4 and 8 are not limited to those specific dimensions. They specify a tympanum (claim 4) or a conical portion (claim 8) "of sufficient area to produce self-sustaining sound waves in the surrounding air when vibrated."

In the *Brandes case* there were two forms of the defendant's loudspeaker, a larger one and a smaller one. Both were held to infringe. The larger one had a tympanum whose overall diameter exceeded nine inches. The smaller one had a tympanum whose overall diameter was slightly less than nine inches—eight and seven-eighths inches. But the diameter of the conical portion was greater than eight-tenths of nine inches, thereby retaining the large cone area of the patent. The reduction in overall diameter of the tympanum of the smaller form was achieved without encroaching upon the size of the cone by making the thin slack rubber rim narrower than the flat rim extension of the paper cone of the patent.

In the instant case the loudspeaker is of substantially the same size as the smaller Brandes loudspeaker. The diameter of the base of the conical portion exceeds eight-tenths of nine inches, thus retaining the large cone area, but the overall diameter of the tympanum (cone plus yielding rim) is slightly less than nine inches—eight and seven-sixteenths inches (Ex. Bk., 23). Here, too, this is achieved without encroaching upon the size of the cone by making the soft leather rim narrower than the flat rim extension of the paper cone of the patent. This

was held not to infringe, and in that holding, the smaller size, as well as the change in the material of the rim, was taken into account. The Court of Appeals for the Ninth Circuit said (R., 202-3):

> "We must either hold that the appellant's device is void for lack of invention or that he is so narrowly confined by the specified dimensions and claims of his patent that the smaller device of the appellee, with its limp leather annulus, does not infringe. It is sufficient for the purpose of this case to follow the latter course, as the trial Judge did."

WHEREFORE, your petitioner respectfully prays that a writ of certiorari be issued under the seal of this Court, directed to the United States Circuit Court of Appeals for the Ninth Circuit, commanding that court to certify and send to this Court on a day to be designated, a full and complete transcript of the record and all proceedings in the case entitled and numbered Lektophone Corporation, Appellant, vs. The Rola Company, Appellee, No. 5,712, to the end that this cause may be reviewed and determined by this Court; that the decree of the Circuit Court of Appeals for the Ninth Circuit be reversed, and that petitioner be granted such other and further relief as may seem proper.

LEKTOPHONE CORPORATION,
By

CHARLES E. HUGHES,
WILLIAM H. DAVIS,
Counsel for Petitioner.

Dated, New York City, December 14, 1929.

United States Litigation.

Lektophone Litigation Pamphlet

Lektophone Corporation vs.

PAGE

Brandes Products Corp. (D. C., D. N. J.), 16 F. (2d), 934 46

Brandes Products Corp. (C. C. A., 3), 20 F. (2d), 155 55

Crosley Radio Corp. (D. C., S. D., Ohio), Not reported 61

Rola Company (D. C., N. D., Cal.), 27 F. (2d), 758 74

Rola Company (C. C. A., 9), 34 F. (2d), 764 83

Sylo Lighting Fixture Co. (D. C., E. D., N. Y.), 11 F. (2d), 421 1

Sylo Lighting Fixture Co. (C. C. A., 2), 16 F. (2d), 7 13

Western Electric Co. (D. C., S. D., N. Y.), 20 F. (2d), 150 25

Western Electric Co. (C. C. A., 2), 16 F. (2d), 10 38

Motions for Preliminary Injunction.

Algonquin Electric Co. (D. C., D. Del.) (Decree for Injunction) 108

Algonquin Electric Co. (D. C., D. Del.) (Decree for Injunction) 110

Splitdorf Radio Corporation (D. C., D. N. J.) (Decree for Injunction) 112

Wirt Company (D. C., E. D., Pa.) (Opinion granting Injunction) 113

Foreign Litigation.

Defendant:

	PAGE
Chanoit et Cie (Lower Court)	121
Chanoit et Cie (Court of Appeals)	148
S. G. Brown Limited (Lower Court)	176
S. G. Brown Limited (Court of Appeals)	198
Societe Francaise Radio-Electrique (Lower Court)	154
Societe Francaise Radio-Electrique (Court of Appeals)	171

BRIEF IN SUPPORT OF PETITION.

In view of the conflict of authority between the Courts of Appeals for the Third and Ninth Circuits, it does not seem necessary to make any extended argument in support of this application.

The difference of opinion turns upon the scope of the patent claims, interpreted in the light of the prior art and of the patent specification. The question of infringement resolves itself into one of law depending upon a comparison between the structure disclosed on the face of the patent and the device manufactured and sold by defendant, and the correct application thereto of the rule of equivalency (*Sanitary, etc., Co.* vs. *Winters*, decided Oct. 14, 1929, at p. 4).

In the past ten years this Court has issued writs of certiorari to bring up the following patent cases, in which the conflict of authority turned upon the *scope* of patents held valid by both of the lower courts. *Bone* vs. *Marion County*, 251 U. S., 134; *Weber, etc., Co.* vs. *Freeman, etc., Co.*, 256 U. S., 668; *Hildredth* vs. *Mastoras*, 257 U. S., 27; *I. T. S., etc., Co.* vs. *Essex, etc., Co.*, 272 U. S., 429; *Temco, etc., Co.* vs. *Apco, etc.*, 275 U. S., 319; *Holland, etc., Co.* vs. *Perkins, etc., Co.*, 277 U. S., 245; and *Sanitary, etc., Co.* vs. *Winters and Winters* vs. *Dent, etc., Co.*, decided October 14, 1929.

In some of these cases the alleged infringing devices in the two Circuits have been substantially the same, as they are in the instant case (*Bone* vs. *Marion County; Hildreth* vs. *Mastoras; I. T. S., etc., Co.* vs. *Essex, etc., Co.; Temco, etc., Co.* vs. *Apco, etc., Co.; Holland, etc., Co.* vs. *Perkins, etc., Co.;* and *Sanitary, etc., Co.* vs. *Winters* and *Winters* vs. *Dent*). In other cases, the alleged infringing devices have been very different (*Weber, etc., Co.* vs. *Freeman, etc.*, 256 U. S., 668 at p. 679).

In many of the cases, as in the instant case, the evidence of prior art was substantially the same in the two Cir-

cuits* (*Weber, etc., Co.* vs. *Freeman, etc., Co.*; *Hildreth* vs. *Mastoras*; *I. T. S., etc., Co.* vs. *Essex, etc., Co.*; *Temco, etc., Co.* vs. *Apco, etc., Co.*; *Holland, etc., Co.* vs. *Perkins, etc., Co.*; and *Sanitary, etc.*, vs. *Winters*). In other cases, the evidence of prior art in the two Circuits has been quite different (see *Bone* vs. *Marion County*, 251 U. S., 134, at p. 140).

The instant case, therefore, presents a direct conflict on a question of law between the Circuit Court of Appeals for the Ninth Circuit and the Circuit Court of Appeals for the Third Circuit. That conflict affects very substantial industrial interests. It cannot be resolved otherwise than by a decision of this Court.

Respectfully submitted,

CHARLES E. HUGHES,
WILLIAM H. DAVIS,
Counsel for Petitioner.

---

*The prior patents and publications discussed in the opinion of the Court of Appeals for the Ninth Circuit are: The Starling & Cole publication (R., 176), Lumiere patent (R., 186), Dann & Lapp patent (R., 189), Maxwell patent (R., 189), Rogers patent (R., 190), and the British patent to Brown (R., 191). The Court of Appeals for the Third Circuit discussed Starling & Cole (*post*, p. 13) and Lumiere (*post*, p. 14), and the British patent to Brown is one of the "metallic sounding diaphragms used in confined space," referred to by that Court (*post*, p. 13). The Maxwell and Rogers patents had been before the courts in the earlier *Sylo case*. They had been pleaded but not proved in the *Western Electric case*. The Dann & Lapp patent, brought into the instant case not as an anticipation but as part of the prior art (R., 68-69), was not before the Circuit Court of Appeals for the Third Circuit and had not been before any other court in the earlier litigation.

APPENDIX.

IN THE

UNITED STATES CIRCUIT COURT OF APPEALS,

FOR THE THIRD CIRCUIT.

No. 3603. March Term, 1927.

LEKTOPHONE CORPORATION,
Plaintiff below, Appellant,

vs.

BRANDES PRODUCTS CORPORATION,
Defendant below, Appellee.

APPEAL FROM THE DISTRICT COURT OF THE UNITED STATES FOR THE DISTRICT OF NEW JERSEY.

Before—BUFFINGTON, WOOLLEY and DAVIS, Circuit Judges.

BUFFINGTON, Circuit Judge. This case concerns cone sounding boards, and charges infringement of Patent No. 1,271,529, granted July 2, 1918, to Hopkins for an acoustic device, and No. 1,271,527, of same date to same patentee for a sound-regulating machine. On final hearing the Court below dismissed the bill, whereupon this appeal was taken. In so deciding, the Court said: "Lumiere device, Patents 986,477 and 1,036,529, is undoubtedly a complete anticipation," and whether it was right in so holding constitutes in our judgment the principal question in this case. These Hopkins patents

were involved in two cases in the Second Circuit; Lektophone vs. Sylo, 11 Fed. (2), 421, where they were held valid and infringed, and Lektophone vs. Western, where Patent No. 1,271,529 was held valid but not infringed, and Claims 29 and 30 of Patent No. 1,271,527 were adjudged invalid. In the Circuit Court of Appeals, 16 Fed. (2), 7 and 10, their validity was not passed on, the cases being determined on the issue of non-infringement. Reference to these cases precludes needless re-statement of the general subject matter.

After full consideration we have reached the conclusion that Hopkins' Patent No. 1,271,529 was not anticipated by Lumiere or others, and that his patent is valid and infringed.

Previous to the use of the now common cone sounding board, the horn was the usual mode of giving out sound. In this state of the art, Hopkins, who had a thorough musical and scientific training, took up at the request of Mr. Edison, and in his laboratory, the problem of finding out what could be done to improve the horn and was so engaged for a year or more. Without quoting at length the very interesting illuminating proof, it suffices to say that after long experiments and study with the horn to ascertain just what its troubles were, and without finding any remedy, Hopkins' attention was directed to the sound boards used in musical instruments—the piano, violin, zither, guitar type, and the like—with the results that these were all found too heavy and the minimum energy, which alone could be utilized, was dissipated in some other way than creating sound in the air. Finally "we got into paper in our seeking for lightness, paper structures, and arrived at the cone type, attempting to simply get lightness with the proper stiffness. Then we made a discovery that the cone not only gave us what would be expected of a physical structure having lightness and thickness, but that it was a peculiarly formed thing for producing the very effect we were after. I

say that was unexpected. * * * We found that it was a direct acting sound-board surface of conical form which is very stiff around its apex and had a gradual lessening of that stiffness toward the edge. Now, we mounted that in a support which would permit it to do all of its vibrating in producing the sound and at the same time keep it in the position that it was intended to be and prevent the flimsier portions of the cone near the edges from breaking up or fluttering when we applied a reasonable amount of energy to it." The proofs satisfy us that the device of Hopkins was not a mere adaptation of existing contrivances, but came as an unexpected surprise at the end of earnest study of the subtle problems involved in this art. Of course, Hopkins is charged with notice of the earlier publication by Starling and Cole, which was published in London in 1907 in the talking machine art. This showed a conical-shaped sounding board, but of such smaller size that it was considered a mere plaything and left no impress on the art. But even if its size had been increased, which in point of fact it was not, its edges would have fluttered or been subject to "weaving" which would have destroyed its efficiency when low notes were attempted to be given off. So also is he visited with notice as to the metallic sounding diaphragm used in confined space but these threw no light upon Hopkins' problem. To our minds, Hopkins was the first to make the combination of a conical-shaped paper device of proper size, provided with flexible edges coupled to a rigid frame used in free air. All of these three elements in free air, the light conical sounding board of specified area, the flexible edge and the rigid frame, combine to reproduce pure low notes. The device has come into general use, and its licensees are now supplying the public needs.

As we understand the action of the cone in free air, waves of different frequency are shed or emitted from the cone at various zones; that is to say, all the high

frequency waves pass off into the open air near the apex of the cone, and as the waves become of lower frequency they will not pass off except from the farther out edges of the cone. In order, therefore, to send out these waves of low frequency the volume of sound must be increased, with the result that as these low frequency waves are emitted near the outer edges of the cone its edges begin to weave or flutter, and set up an independent motion of their own. This is termed blasting and is highly objectionable. Now it seems to us that Hopkins was the first to point out that this blasting effect caused by the local vibrations at the edge of the cone would be prevented and the cone held restricted to vibrations as a whole and the weaving prevented by the expedient of using a rigid frame and making a liaison between the edges of the cone and the clamp of the rigid frame by a flexible yielding liaison belt which vented and thereby prevented the obnoxious fluttering of a cone's edges not rigidly held. By these means the cone was kept in place and by reason of the flexible character of the liaison connection or belt the cone vibrated as a whole, and its outer edges did not vibrate locally. In this way the use of the added sound volume, which was necessary to carry low frequency tones to the outer edge of the cone and there allow them to pass directly into the open or unconfined air, was made possible. Such being Hopkins' disclosure, we next turn to the basic question on which the Court below decided the case, namely, whether Hopkins' disclosure was anticipated by Lumiere in his patents Nos. 986,477 and 1,036,529 of 1912. It is a significant fact that although Lumiere's device was adopted by such a strong company as the Victor, it has never passed into approving public use, and that company itself is using a cone which the General Electric Company makes as licensee under Hopkins' patent. But apart from Lumiere's patents having attained no position in the practical art, it is quite clear that he had no conception of that

which constituted the gist of Hopkins' invention. Indeed, it seems to us that on final analysis Lumiere had in reality merely a flat sounding board. It is true he used paper and has a construction which may be likened in some sense to a cone, but it seems to us the real plane of Lumiere is the central zone of his paper, for while there is an edge around the apex made by the foldings or corrugations of his paper, and it can therefore be said that he has an outer edge of a dished or quasi-conical shape, it is to be observed that there is a corresponding corrugation structure on the other side of his central or medium zone, and that the two exterior edges of his corrugations, front and back, are not really two individual side cones but are unitary in reality and one structure and that the real plane is the median flat horizontal one midway between the exterior side corrugations. Moreover, making corrugations of this sort changes a fairly flexible plane into a relatively stiff, unyielding structure. Indeed, it would seem that his corrugations were for structural or stiffening purposes rather than for sound purposes. Moreover, the outer edge of Lumiere's paper corrugated structure is flattened and is clamped—and we venture to think as a continuation of his flat median surface—to the rigid structure which holds the cone in place. Lumiere, therefore, not having the flexible rim between his cone proper and his rigid support, his sounding board moves as a unitary structure from the edge of the restraining frame to the central part, while in Hopkins' the cone moves as a whole, unrestrained and unlimited by the rigid frame. Tested by the standard of means and the product, the art never would have had a practical sounding-board had it stopped with Lumiere. It was Hopkins who gave a successful combination which produced low, clear tones on a conical sounding-board in free air. For these reasons, we believe that the Court below fell into error, and so far as Patent No. 1,271,529 is concerned its decrees should be reversed and the cause

remanded with instructions to enter a decree holding the claims in issue valid and infringed. Briefly stated we find infringement on the part of the defendant. While the form of Hopkins' circular cone is not precisely duplicated by defendant's elongated oval board, yet in area and sound functioning, it is appropriated and reproduced. By the defendant's flexible rubber liaison member, held in place by the rigid surrounding frame, weaving and fluttering of the outer edges of the sounding-board are prevented and the device as a whole produces the low, clear tones of the Hopkins device. Having thus appropriated in substance Hopkins' board and produced thereby the sounds desired, the defendant seeks to escape infringement by placing over the functioning structure an ornamental hood and thereby, as it contends, make the apparatus operate in confined air. The purpose of the hood to escape infringement by using an outward and visible form to escape an inner and duplicating substance is too clear to find lodgment in the minds of those who judge rights on the basis of substance rather than form. As to Patent No. 1,271,527, we are in accord with the views of Judge Thacher in Lektophone vs. Western, supra, which was adopted by the Court below. In that respect the decree below will be affirmed. The costs here and in the Court below will be apportioned four-fifths in favor of plaintiff and one-fifth for defendant.

FILE COPY

OCT 6
CHARLES ELMORE

Supreme Court of the United States

OCTOBER TERM, 1930.

No. 19.

LEKTOPHONE CORPORATION,
Petitioner,

vs.

THE ROLA COMPANY,
Respondent.

BRIEF FOR PETITIONER.

ON WRIT OF CERTIORARI TO THE UNITED STATES CIRCUIT COURT OF APPEALS FOR THE NINTH CIRCUIT.

WILLIAM H. DAVIS,
of Counsel.

GALLO & ACKERMAN, Inc., 142 Liberty Street, 'Phones—Hitchcock 3078-9.

INDEX.

	PAGE
Jurisdiction	1
Brief Statement of the Case	3
The Nature of the Invention	3
The Element of Defendant's Structure That Gives Rise to the Conflict of Authority	4
The Issue	5
Summary of Argument	7
Argument:	
The Subject Matter Patented	8
The Idea of Means	9
The Mode of Operation and Functional Relationship of the Three Elements	14
The Result	16
The Claims	17
Defendant's Structure	18
The Relation of the Hopkins Invention to the Prior Art	21
1. Starling & Cole	21
2. Classification of Patents Relied on by Defendant	25
The Flat Sounding Board Patents	26
French patent to Ader 127,180 of 1878.	
British patent to Lodge 9,712 of 1898.	
U. S. patent to Shanks 822,024.	
U. S. patent to Lumiere 986,477.	
U. S. patent to Lumiere 1,036,529.	

PAGE

The Sound Box and Horn Combination Patents... 30
U. S. patent to Kraemer 890,142.
U. S. patent to Edison 963,362.
U. S. patent to English 1,064,062.
U. S. patent to Brown 1,096,676.
U. S. patent to Johnson 1,180,461.
U. S. patent to Elfering 1,182,078.
U. S. patent to English 1,192,289.
British patent to Stroh 9,418 of 1899.
British patent to Stroh 3,393 of 1901.
British patent to Brown 29,833 of 1910.
British patent to Brown 1,157 of 1911.

The Maxwell Mechanical Telephone Patent 33
The Dann & Lapp Telephone Transmitter Patent 36
The Rogers Electrical Telephone Transmitter Patent (footnote, p. 22) 22, 26

The Nature of Hopkins' Inventive Act Looked at From the Point of View of the Prior Art 36
Is the Defendant's Structure Excluded From the Monopoly by the Disclosure of the Specification and the Patent Office Proceedings? 40

Estoppel 42
Changes Made in Claim Language as to the Rim 42
Changes Made in Claim Language as to Size 43

Interpretation 46

Things Said in Argument with Respect to Size 51

The Proper Test of Infringement 63

The Decision and the Opinion of the Court of Appeals in the Instant Case 65
The Fundamental Error 68
Conclusion 71

INDEX OF CASES CITED.

PAGES

Alice State Bank vs. Houston Pasture Co., 247 U. S., 240 3
American Cone & Wafer Co. vs. Denaro, 297 Fed., 913 41
Boyer vs. Keller Tool Co., 127 Fed., 130 41
W. F. Burns Co. vs. Automatic, 241 Fed., 472 41
Cartridge vs. Cartridge, 112 U. S., 624 40
Computing, etc., Co. vs. Automatic Scale Co., 204 U. S., 609 40
Concrete Appliances Co. vs. Meinken, 262 Fed., 958 39
Continental, etc., Co. vs. Eastern, 202 U. S., 415 ..... 69, 70
Corbin vs. Eagle Lock, 150 U. S., 38 40
Crawford vs. Heysinger, 123 U. S., 589 40
Crown Cork & Seal Co. vs. Sterling, etc., Co., 217 Fed., 381 39
Dobson vs. Lees, 137 U. S., 258 40
Eibel Co. vs. Paper Co., 261 U. S., 45 70
Fullerton Walnut Growers Assn. vs. Anderson, 166 Fed., 443 41
Goodyear, etc., Co. vs. Davis, 102 U. S., 222 ..... 40, 41
R. Hoe & Co. vs. Goff Press Co., 30 F. (2d), 275 41
Hubbard vs. Tod, 171 U. S., 474 3
Hubbell vs. U. S., 179 U. S., 78 40
I. T. S. Co. vs. Essex Co., 272 U. S., 429 40
Knapp vs. Morss, 150 U. S., 221 40
Kokomo, etc., Co. vs. Kitselman, 189 U. S., 8 40
Leggett vs. Avery, 101 U. S., 256 40
Lehigh, etc., Co. vs. Kearney, 158 U. S., 461 40
Lektophone Corp. vs. Brandes (D. C., Dist. N. J.), 16 F. (2d), 934 27
Lektophone Corp. vs. Brandes (C. C. A., 3), 20 F. (2d), 155 ..... 1, 2, 4, 6, 11, 23
Lektophone Corp. vs. Colonial (D. C., E. D., N. Y.), unreported 24, 29

PAGES

Lektophone Corp. vs. Miller Bros. (D. C., Dist. Del.), 37 F. (2d), 580 ..... 2, 3
Lektophone Corp. vs. Rola Co. (C. C. A., 9), 34 Fed. (2d), 764 ..... 5, 6, 24, 65-70
Lektophone Corp. vs. Sylo, etc., Co. (D. C., E. D., N. Y.), 11 F. (2d), 421 ..... 26, 30, 35, 39
Lektophone Corp. vs. Western Electric (D. C., S. D., N. Y.), 20 F. (2d), 150 ..... 22, 23, 27, 31, 38
McCarty vs. Lehigh, etc., Co., 160 U. S., 110 40
McCormick, etc., Co. vs. Medusa, 222 Fed., 288 41
Machine Co. vs. Murphy, 97 U. S., 120 ..... 21, 63
Mahn vs. Harwood, 112 U. S., 354 40
Miller vs. Eagle, 151 U. S., 134 69
J. A. Mohr & Son vs. Alliance, etc., Co., 14 F. (2d), 793; affirmed 14 F. (2d), 799 41
Montana Mining Co. vs. St. Louis, 186 U. S., 31 3
Morgan, etc., Co. vs. Albany, etc., Co., 152 U. S. 425 40
Pangborn Corp. vs. W. W. Sly Mfg. Co., 284 Fed., 217 41
Phoenix, etc., Co. vs. Spiegel, 133 U. S., 360 40
Roemer vs. Peddie, 132 U. S., 313 40
Royer vs. Coupe, 146 U. S., 524 40
Sanitary Refrigerating Co. vs. Winters, 280 U. S., 30 ..... 3, 21
Sargent vs. Hall, 114 U. S., 63 40
Sewall vs. Jones, 91 U. S., 171 61
Shepard vs. Carrigan, 116 U. S., 593 40
Singer Co. vs. Cramer, 192 U. S., 265 40
Sutter vs. Robinson, 119 U. S., 530 40
Temco vs. Apco, 275 U. S., 319 ..... 21, 70
Watson vs. Cincinnati Ry. Co., 132 U. S., 161 40
Weber, etc., Co. vs. Freeman, etc., Co., 256 U. S., 668 40
Westinghouse, etc., Co. vs. Boyden, etc., Co., 170 U. S., 537 ..... 40, 42, 63
Winans vs. Denmead, 15 How., 330 ..... 21, 61, 63

Supreme Court of the United States

OCTOBER TERM, 1930.

No. 19.

LEKTOPHONE CORPORATION,
Petitioner-Plaintiff,

VS.

THE ROLA COMPANY,
Respondent-Defendant.

BRIEF FOR PETITIONER.

(Plaintiff Below.)

Jurisdiction.

The case (No. 19) comes to this Court from the Circuit Court of Appeals for the Ninth Circuit on a writ of certiorari, granted January 27, 1930, on petition of plaintiff below, because of conflict between the decision of that Court (34 Fed. [2d], 764; and Tr., 172) and the decision of the Court of Appeals for the Third Circuit in *Lektophone Corporation* vs. *Brandes Products Corporation* (20 Fed. [2d], 155, and pamphlet, p. 55) as to the scope

of patent No. 1,271,529, granted July 2, 1918, to Hopkins for an "Acoustic Device"*.

After the issuance of the writ of certiorari in the instant case, this Court, on May 5, 1930, on petition of defendant Miller Bros., issued a writ of certiorari to the Court of Appeals for the Third Circuit in *Miller Bros.* vs. *Lektophone Corporation* (37 F. [2d], 580; pamphlet, p. 108), and on joint motion of the parties that case (No. 68), has been advanced and assigned for hearing following the instant case.

The *Miller case* arose in the District of Delaware before Judge Morris who, on January 23, 1930, held that the issues and the evidence in the *Miller case* differ in no substantial particulars from those in the *Brandes case* and decreed for plaintiff on that authority. An appeal was immediately perfected to the Court of Appeals for the Third Circuit and this Court was petitioned to issue and did issue a writ of certiorari before the Circuit Court of Appeals passed on the case.

In the instant case, the Circuit Court of Appeals of the Ninth Circuit found it unnecessary to pass upon the validity of the patent (Opinion, Tr., 130), which had been affirmed in the *Brandes case* and elsewhere. The Court rested its decision on the holding of non-infringement (Opinion, Tr., 132).** Under these circumstances valid-

---

*The patent has been much litigated in this country and the corresponding patent has been much litigated abroad. The validity of the patent has repeatedly been affirmed by the courts in this country and abroad. Accused devices of different forms have been adjudicated. Some have been held to infringe and others have been held not to infringe. All these opinions have been printed in a pamphlet entitled "Lektophone Litigation—Opinions and Decrees" which will be filed with this brief, and herein cited as—pamphlet, page .....

**The ground assigned for the petition of certiorari was that

> "A conflict as to the scope of patent claims, on substantially the same evidence of prior art and substantially the same type of accused device, exists between the Court of Appeals for the Ninth Circuit and the Court of Appeals for the Third Circuit" (Petition, p. 1).

ity will not be reviewed in the instant case, as we understand it;* although the state of the art will be considered in determining the scope of the patent.

In the *Miller case* (No. 68) validity is, we suppose, at least nominally in issue in addition to the question of infringement.

Brief Statement of the Case.

The Nature of the Invention.

1. The patented loudspeaker was conceived prior to June 14, 1913, when the phonograph or talking machine art used the sound-box and horn combination familiar in the early exposed-horn phonographs and later in the cabinet phonographs of the "Victrola" type. To escape the sound distortions, particularly in the horn or trumpet, the inventor sought directly to regenerate or recreate sounds without the interposition of a confined body of air as in the old sound-box; and without the employment of a restrictive transformer such as the old horn or trumpet.

2. He developed for this purpose a large, light, stiff paper cone, coupled by an annular plane peripheral rim to a rigid encircling frame—a simple three-element mechanical combination.

3. The law of cooperative action of the three elements of this mechanical combination is that vibrations of sound frequencies impressed upon the apex of the large, light, stiff paper cone move the cone bodily to impart the sound waves directly to a large body of air, the rigid

Alice State Bank vs. *Houston Pasture Co.*, 247 U. S., 240; *Montana Mining Co.* vs. *St. Louis*, 186 U. S., 31; *Hubbard* vs. *Tod*; 171 U. S., 474, and *Sanitary Refrigerating Co.* vs. *Winters*, 280 U. S., 30.

encircling frame affords mechanical support and protection for the whole structure, and the interposed plane peripheral rim yields sufficiently to permit the bodily sound-producing movement of the large, stiff cone, resisting, however, excessive displacement and deformation of the periphery of the cone.

Lightness, stiffness and large area are the essential characteristics of the sound-producing conical portion of the structure, **yielding flexibility** is the essential characteristic of the interposed rim, and **rigidity** is the essential characteristic of the annular frame.

In the *Brandes case*, the Circuit Court of Appeals of the Third Circuit said (pamphlet, pp. 56-57):

> "Previous to the use of the now common cone sounding board, the horn was the usual mode of giving out sound. * * *
>
> To our minds Hopkins was the first to make the combination of a conical-shaped paper device of proper size provided with flexible edges coupled to a rigid frame used in free air. All of these three elements in free air, the light conical sounding-board of specified area, the flexible edge and the rigid frame, combine to reproduce pure low notes. The device has come into general use, and its licensees are now supplying the public needs."

The Element of Defendant's Structure That Gives Rise to the Conflict of Authority.

Defendant's loudspeaker (Pltff.'s Ex. 3) has the large light paper cone of the specified area, the rigid annular frame, and the interposed flexible rim. The **sole** difference from Hopkins' specific disclosure lies in the rim. Where Hopkins' specific disclosure shows a paper rim

constituting a plane peripheral extension of the cone, defendant uses a narrower rim of more flexible material—soft kid leather.

In the *Brandes case*, precisely the same situation existed. There, defendant's narrower rim was made of thin rubber.* The conflict was expressed in the following words in the opinion of the Court of Appeals of the Ninth Circuit (Tr., 130-131):

> "* * * we cannot follow the latter decision [the *Brandes* decision] in so far as it holds that a flexible, non-resonant rim or annulus connecting the cone of the diaphragm to the stationary metal rim is the equivalent in a sound-reproducing device of the flat rim or plane annulus of Hopkins' tympanum. * * *."

The Issue.

Thus the sole issue here is whether this substitution of a narrower rim of more flexible material avoids the Hopkins patent.

Specified area is important in the patented invention. Defendant retains the specified area of the light conical sounding board. The area (width) of the flexible rim is important only as it affects the flexibility of the rim. Compared with the plane peripheral extension of the paper cone specifically disclosed in the Hopkins patent, defendant's rim is narrower. But the narrowing of defendant's rim, which tends to decrease flexibility, is offset by the use of a more flexible material. Upon this compensated departure from the literal disclosure of the specific embodiment in the Hopkins patent defendant's whole argument of non-infringement is based. **No other difference between the two structures exists.**

---

*Pltf.'s Ex. 27, Tr., 104 and 106.

It was contended in both Courts of Appeals (a) that the state of the art requires a limitation of the Hopkins patent to the specific form of plane peripheral paper rim illustrated, and (b) that by the language of the specification and the representations made in argument by the patentee or on his behalf when the application was pending in the Patent Office, plaintiff is estopped to cover any other form of rim.

The Court of Appeals for the Third Circuit rejected all defendant's contentions.

The Court of Appeals for the Ninth Circuit rejected the argument for estoppel, saying (Tr., p. 129):

> "The representations or arguments of the patentee in the patent proceedings do not under the circumstances here disclosed constitute an estoppel. American Cone & Wafer Co. vs. Denaro, 297 Fed., 913; Fullerton Walnut Growers Assn. vs. Anderson Barngrover Mfg. Co., 166 Fed., 443; R. Hoe vs. Goss Printing Press Co., 30 Fed., 2nd, 271-275."

But that Court sustained the contention as to limitation by the prior art, expressing its inability to agree with the Court of Appeals for the Third Circuit (*ante*, p. 5) and saying (Tr., 132):

> "We must either hold that the appellant's device is void for lack of invention or that he is so narrowly confined by the specified dimensions and claims of his patent that the smaller device of the appellee, with its limp leather annulus, does not infringe. It is sufficient for the purpose of this case to follow the latter course, as the Trial Judge did."

SUMMARY OF ARGUMENT.

1. The Hopkins device is a three-element mechanical combination comprising a large, light, stiff paper cone, coupled by an annular plane peripheral rim to a rigid encircling frame, resulting in a practical direct-acting loudspeaker having a new mode of operation and a new result.

2. Defendant has copied that structure, making only a colorable departure therefrom by substituting for the plane peripheral extension of the cone a narrower rim whose desirable flexibility is retained by making it of more flexible material.

3. Comparison of the patented device with the prior art shows that the invention lay in the new combination, not in the selection of the rim material, which was already old and the material of which is nowise essential so long as its flexibility is preserved.

4. Neither the disclosure of the specification nor the patent office proceedings limit the broad language of the claims to a rim which is an integral plane peripheral extension of the cone, or otherwise exclude defendant's structure.

5. On the contrary, change in claim language during the prosecution evidences the patentee's determination, in which the patent office examiner acquiesced, (a) that the monopoly should not be limited to a rim which is an annular plane peripheral extension of the cone, and (b) that it should not be limited to exclude equivalent structures in which the overall diameter might be literally less but not substantially less than nine inches.

6. In estimating the range of equivalents to which the patent is entitled, the Court of Appeals in the instant case fell into the error repudiated by this Court in the Paper Bag case (Continental, etc., Co. vs. Eastern, 202 U. S., 405, 415).

ARGUMENT.

The Subject Matter Patented.

The Object.

The stated object of the invention is the direct propagation of sound waves of correct intensity, amplitude, pitch and timbre on free air, as distinguished from the indirect production of sounds by means of a "reproducer or sound-box and horn" commonly used for sound production prior to Hopkins' invention (Pat., p. 1, lines 12, et seq., Tr., 134).

The patentee explains (Pat., p. 1, lines 27-66, Tr., 135) that in the usual sound-box and horn combination, when the diaphragm (which is one wall of a small casing called a sound-box) is vibrated, it sets up in the confined air in the sound-box, waves or impulses of high-pressure and small-area. The high-pressure small-area impulses thus generated within the sound-box are not waves having the proper self-sustaining form to travel through the air to the listener's ear and there produce sounds which are an accurate reproduction of the original sounds. This is evidenced by the squeaky sounds made by a phonograph sound-box when its horn is removed. These impulses were, therefore, in this old sound-box and horn combination led out from the sound-box through a small opening in the wall opposite the diaphragm into the throat of a horn which transformed the high-pressure, small-area impulses into low-pressure, large-area self-sustaining sound waves. This combination of sound-box

and horn introduced certain "distortions of the true recorded sounds in the reproducer, and more particularly in the horn or amplifier, giving rise to those characteristic sounds known as phonograph and horn sounds" (Pat., p. 1, lines 52-57, Tr., 135).

Differentiating his invention in principle and purpose from this old sound-box and horn combination, the patentee says: (Pat., p. 1, lines 67, et seq., Tr., 135) that the direct acting sound producer of his invention directly propagates the sounds on free air "without the interposition of a confined body of air and without the employment of a restrictive transformer such as a horn," thereby eliminating the undesirable distortions and obtaining direct propagation in free air of sound waves of an intensity and amplitude substantially corresponding to the original sound waves.

The Idea of Means.

The means devised by the inventor for effecting his stated purpose are then indicated generally in the patent as follows (p. 1, lines 94-102, Tr., 136):

> "The invention consists, briefly, in the provision of a tympanum of novel construction, which is capable of responding to the high frequency vibrations employed in the reproduction of sounds, and of imparting these vibrations to a large body of air; and it is to be considered as a division of the invention shown and described in my prior application,* renewed March 22, 1918, No. 224,048."

Proceeding to a description of his preferred embodiment of the invention, the patentee says (p. 2, lines 72-79, Tr., 137):

---

*This parent application became patent 1,271,527. See file wrapper, Pltf.'s Ex. 7, Tr., 192, et seq., and patent 1,271,527, Tr., 287, et seq.

"The tympanum L, which forms the subject of the present case, is constructed of light, vibratile material and has an annular plane peripheral portion or supporting rim *l*, the outer edge of which is tightly gripped and rigidly supported between the rings K,K′, and a central conical portion *l′* rising from the inner edge of the said rim *l*."

The function of the plane peripheral portion *l* of the tympanum and its cooperative relationship to the other elements, is stated in the parent application (Pltf.'s Ex. 7, Tr., 204) as follows:

"The plane peripheral portion *l* of the tympanum maintains the place of the conical active portion of the tympanum and yields sufficiently to permit of the required motion of the conical portion resisting, however, displacement of the conical portion in just that degree necessary to maintain the form and neutral position of the active conical portion."

It will be seen that this is a simple mechanical combination of three elements, (1) the central conical portion *l′* of the tympanum which is the effective sound producer, (2) the plane peripheral portion *l* of the tympanum which yieldingly connects the conical portion to the rigid frame, and (3) the rigid frame consisting of the rings K,K′.

The above quoted statement of the essential three-element structure is followed in the patent by the following statement as to the size necessary for satisfactory regeneration of sounds (patent, p. 2, lines 79-103, Tr., pp. 137-138).

"If satisfactory regeneration of sounds from a record or other sound-vibrated element is to be had, the whole diameter of the tympanum, that is, the diameter of the aperture in the rings K, K′ should exceed nine inches in order that the condition required to regenerate the sound waves in the man-

ner above described shall be fulfilled. The base of the central conical portion *l'* should exceed in area one-half of the effective area of the entire tympanum, that is, the area of the aperture in the rings K, K'; or in other words, the diameter of the base of said conical portion should be at least eight-tenths of the diameter of the said aperture. The altitude of the conical portion *l'* should be at least one-quarter of the diameter of its base.

"It is, of course, possible to make some variation from the approximate sizes given without materially altering the result; but if the tympanum is constructed as shown in the drawing, any great variation from these proportions will be found to affect the character of the reproduction."

It is important to understand how size affects the character of the reproduction. It is not at all a matter of choosing a large size to make a louder sound. It is a question of the correct reproduction of the musical pitch and timbre, not a question of volume of sound.

Correct pitch and timbre demand recreation, in even balance, of all the sound frequencies that are important in speech and music. Frequencies vary from about 100 cycles per second up to about 5,000 cycles per second. The wave length of a high pitched note of 5,000 cycles per second is three and one-half inches. The wave length of a low pitched note of 100 cycles per second is eleven feet (Hazeltine, Tr., 25). The area of the sound emitting surface must bear some reasonable relation to the wave length of the emitted sound.* Theoretically, the radiating sur-

*It is a highly valuable, and unforeseeable, advantage of Hopkins' light stiff paper cone of adequate area that it adapts itself to sound vibrations of all important frequencies. Higher frequencies are shed or emitted from near the apex and as the waves become of lower frequency they are emitted from greater areas. That effect was commented upon by the Circuit Court of Appeals for the Third Circuit in the *Brandes case* (Pamphlet, p. 57).

face should be about one-third of the wave length. In the sound-box and horn combination the diameter of the sound-box diaphragm was about one inch (Hazeltine, Tr., 26). The area of the aperture in the sound-box at the base of the horn was a fraction of an inch (Tr., 25). The taper in the horn or trumpet of gradually increasing cross-sectional area was introduced to permit a gradual expansion of the wave to the necessary larger area before it was released upon the air. For the lower frequencies the mouth of the ordinary horn should theoretically be about four feet in diameter, but this was objectionably large and the ordinary horns had a mouth diameter of less than a foot. To effect an equivalently balanced reproduction of the sounds over the entire frequency range, Hopkins taught that the base area of his conical sounding-board should be not less than half the area of a tympanum (cone plus rim) nine inches in diameter. For the purpose of the present case that may be taken to be a cone having a minimum basal diameter of 7.2 inches—eight-tenths of nine inches.* Compared with the one inch diaphragm commonly used in the old phonograph sound-boxes that affords a minimum area approximately fifty-two times as large. This enlargement enabled Hopkins to do away with the horn and its accompanying distortions without sacrificing balance of the high and low notes (See Hazeltine, Tr., 25-27).

The patentee then says (p. 2, lines 103-124, Tr., 138):

> "It is of vital importance that the tympanum be made of crisp, strong material, having considerable

*The statement in the Hopkins patent that a cone having a basal diameter eight-tenths of the diameter of the entire tympanum is, "in other words," a cone having an area one-half of the area of the entire tympanum, is not mathematically accurate. The areas are related to one another as the squares of the diameters, and a cone having a basal diameter of 6.36 inches would have a base area one-half the area of the entire tympanum 9 inches in diameter.

rigidity within itself, and it is also of vital importance that the tympanum as a whole be extremely light and have as little inertia as possible without a weakening effect. The tympanum is shown of conical form* with a smooth surface, and this has been found to be very satisfactory. The conical shape is given the tympanum so that shocks or vibrations impressed upon the apex of the cone in a direction toward its base will *move the whole cone bodily*, the strains being imparted edgewise of the material and no wave motions being set up in the thin material of the cone. The curvature of the walls of the cone precludes the setting up of waves in the material; *and the intended object, a simultaneous movement of the whole conical portion of the tympanum, is thus attained.*" (Emphasis ours.)

With respect to the rim portion of the tympanum, the patentee then says (p. 2, line 124 to p. 3, line 1, Tr., 138):

> "While I prefer to construct the tympanum in the form described and shown with a smooth surface, especially in view of the ease of construction, yet it is possible to form radial or concentric corrugations in the plane peripheral portion *l* and produce a light, stiff and very satisfactory article for the purpose."

It is plain that if the rim is made with radial corrugations it will be stiffer for a given width and a given thickness of material, and that if it is constructed with concentric corrugations, it will be more flexible for a

*In this and the following sentence Hopkins applies the word "tympanum" to the conical portion alone. In the description of the tympanum itself (p. 2, lines 72-79, *ante*, p. 10) and in the claims it is used to define the cone plus the rim.

given width and a given thickness of material (Hopkins, Tr., 75).

The patentee's disclosure, so far as it has to do with the acoustic device "which forms the subject of the present case" (Pat., p. 2, line 72) is then completed by the statement (p. 3, lines 6-12, Tr., 138):

> "The tympanum should preferably be constructed of a colloidal substance, and should be from 3 to 20 thousandths of an inch in thickness according to the crispness or stiff character of the material used. Compressed fibrous material, such as hot pressed paper or fiber, has been found to act satisfactorily."

This statement defines the paper cone material used by this defendant, as well as by Brandes and by Miller.

The Mode of Operation and Functional Relationship of the Three Elements.

Vibrations are impressed upon the apex of the cone *l'*. The vibrated cone directly imparts these vibrations to a large body of unconfined air. There is no confining of a small body of air in a sound-box and subsequent transformation of the violent disturbances by means of a horn as in the sound-box horn combinations of the old art. The inertia of the large light paper cone is very small so that it is capable of responding to the high frequency vibrations employed in the reproduction of sounds. Its conical shape provides stiffness in the direction of the axis of the cone so that when vibrations are impressed upon its apex, they "will move the whole cone bodily," and, "the intended object, a simultaneous movement of the whole conical portion of the tympanum, is thus attained."

Like vibrations impressed upon a disk of paper of the same weight would move only a small area near the

center, bending the paper but not effectively imparting sound waves to the air.

Although the paper cone is much more rigid than would be a flat sheet of paper, yet it is not absolutely rigid; and it is less rigid at the periphery than at the apex. If sound-producing vibrations were impressed upon such a paper cone left free at its peripheral edge there would result a weaving or fluttering of the edge which would give rise to rasping noises of the paper referred to as "blasting."* If, on the other hand, the rings K,K′, were so shaped and applied as to clamp the edge of the cone itself, that would prevent the desired bodily movement of the cone and greatly reduce the sound-producing motion thereof.**

So the inventor introduced between the mechanical framework of the device constituted by the rings K,K′ and the vibrating cone itself, the plane peripheral portion or supporting rim *l* which **yieldingly** holds the vibrating cone in position, permitting the required sound-producing bodily motion of the conical portion, yet sufficiently resisting displacement to prevent the deformation of the peripheral edge of the cone which would cause the blasting noises.

The **rigid** frame and flexible annular rim not only convert the cone *per se* from an impractical and unsuccessful sound regenerating device into a thoroughly practical and successful one from an acoustical standpoint but they also make the loudspeaker a practical and successful one from a mechanical and commercial standpoint because the rigid frame furnishes protection to the cone and gives strength and stability to the device. These mechanical and commercial advantages are obtained without sacrificing any acoustical advantages because the interposed

---

*Plaintiff's expert Hazeltine, Tr., 27-28; defendant's expert Tenny, Tr., 65; Hopkins, Tr., 74; Demonstration by Hazeltine, Tr., 95.

**Hazeltine, Tr., 28; Tenny, Tr., 65-66; Hopkins, Tr., 76.

annular rim yieldingly connects the frame and the cone so as to avoid the damping that would result from directly connecting the frame to the cone and at the same time avoids the acoustical imperfections of a free edge cone, i. e., a cone whose edge is uncontrolled.

While the propagation of the sound waves in the air, generally speaking, is a function of the large, light, stiff paper cone *per se,* nevertheless the **efficient** propagation of the sound waves in the manner contemplated by the patent is the result of the simple and very definite coaction of the three elements of the combination. It is the functional relationship between the conical active portion and the flexible rim, on the one hand, and between the flexible rim and the rigid frame, on the other hand, that "maintains the place of the conical active portion" (Pltff.'s Ex. 7, Tr., 204) and causes the flexible rim to "maintain the form" of the base of the cone and thereby prevent weaving or fluttering of the edge of the cone, while at the same time the flexible rim "yields sufficiently to permit of the required motion of the conical portion" (Tr., 204).

The Result.

By these three elements in combination, functionally related as above described, the patentee's stated object was so far attained as to bring within the reach of the purchasing public for the first time a satisfactory direct-acting sound producer; an object which had engaged the attention of inventors and patentees for many years, but which had not previously been practically attained. The invention was made and marketed during the old days of the phonograph, before the advent of radio broadcasting and radio loudspeakers. In the old phonograph days, sound reproduction was effected entirely by means of the sound-box and horn combination, the horn being either

exposed to view or enclosed within the phonograph cabinet, and in the early days of the radio, the sound-box and horn combination was generally used for sound reproduction. Today the sound-box and horn combination is used only in improved, highly developed and expensive form.* We see on every hand in the shops and in the homes of America direct-acting loudspeakers of the paper cone type.

It is plaintiff's position that this three-element combination invented and patented by Mr. Hopkins was the first practical loudspeaker of the direct-acting type; that it was an important contribution which turned the art of loudspeakers into a new channel of development and is directly responsible for the large cone speaker industry of today.

The Claims.

The broadest claims, which read literally on defendant's structure, are claims 4 and 8, as follows:

> "4. An acoustic device, comprising a tympanum support having a circular aperture, and a light tympanum** freely exposed to unconfined air and having its outer edge rigidly mounted on said support in said aperture; said tympanum having a central conical portion, the base of which exceeds in area one-half the effective area of the said tympanum; the tympanum being of sufficient area to impart to the surrounding free air, when vibrated, sound waves substantially corresponding in intensity to the original sound waves.

*Tenny, Tr., 60-61.

**Note that the word "tympanum" is here used to embrace the two elements (1) the "central conical portion" and (2) the "annular plane peripheral portion or supporting rim."

8. An acoustic device, comprising a tympanum embodying a bodily movable, central conical portion, and an annular rim which encircles said conical portion and which is rigidly supported, said conical portion being freely exposed on all sides to unconfined air and being of sufficient area to produce self-sustaining sound waves in the surrounding air when vibrated, substantially as described."

Defendant's Structure.

That defendant's loudspeaker (Pltf.'s Ex. 3) has the three elements of the Hopkins invention, i. e., (1) a direct acting paper cone of sufficient area to impart to the surrounding free air when vibrated, sound waves substantially corresponding in intensity to the original sound waves, (2) a rigid metal frame, and (3) the interposed flexible rim, is immediately apparent upon looking at it; or upon comparing the drawing of the patent with the drawing of defendant's device (Tr., 158) both printed on the opposite page.

HOPKINS

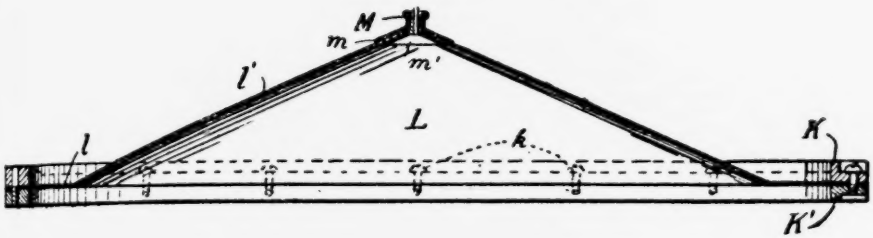

ROLA

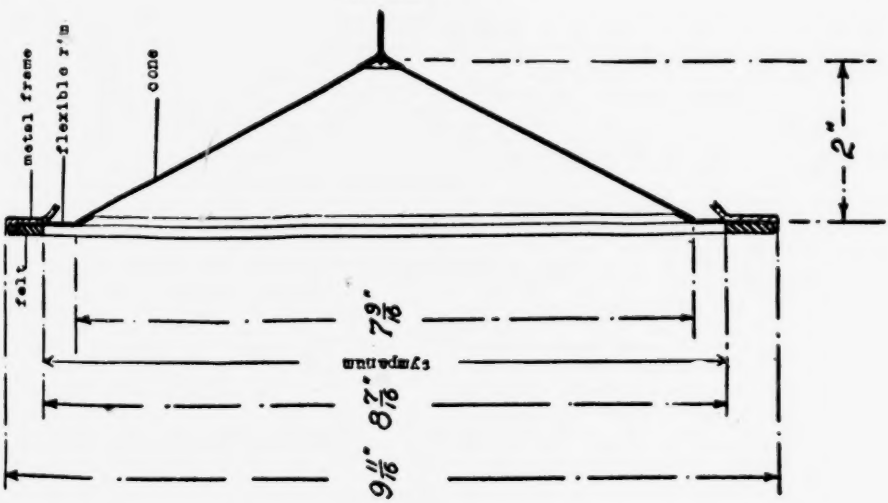

Area of tympanum = 55.95 sq. in.
Area of base of cone = 44.90 sq. in.

The three elements of defendant's device have the same functional relationship as the elements of the patented device. The cone has the large area, the lightness and the stiffness required. The rim has sufficient flexibility to permit the bodily sound-producing movement of the cone, and yet is effective to prevent the blasting that a free-edge cone would suffer from*. The annular frame has rigidity to serve as a mechanical support and protection for the entire structure.

In defendant's structure the cone has a base diameter greater than eight-tenths of nine inches so that defend-

---

*Plaintiff's expert Hazeltine said (Tr., 29):

> "I believe the mode of operation of defendant's loudspeaker is just the same as the mode of operation described in the Hopkins patent."

Defendant's expert Tenny said (Tr., 65-66):

> "Q. Why don't you support your cone by a rigid frame clamped directly to the edge of the cone, instead of having this interposed flexible rim?
>
> A. To enable the cone to vibrate freely and move freely."

Defendant's witness Jensen said (Tr., 68):

> "The purpose of the soft kid leather is to hold the cone in position, and also to prevent the sound from the front part getting over to the back of the cone."

Defendant's expert Tenny said (Tr., 53):

> "When sound vibrations reach that flexible kid membrane, the softness and yielding qualities of it cause it to absorb a great proportion of that sound, and cause it to absorb and prevent the bulk of that rattling."

The Court of Appeals in its opinion in the instant case said (Tr., 118):

> "It is claimed that the Hopkins form of tympanum, a cone with an annulus at its base, fixed in place at its outer edge obviates this difficulty [blasting], and the evidence shows that it does so to some extent; and that the appellee's loudspeaker by its method of securing the edge of the cone to the fixed frame by limp leather produces the same result and therefore infringes this feature of the patent."

ant has literally copied from the patentee the active conical portion of its loudspeakers. The rim of defendant's structure is narrower than the Hopkins rim, thereby diminishing the over-all diameter of the tympanum to slightly less than nine inches but the narrower rim is made of more flexible material so that the desirable flexibility is retained.

It is plaintiff's position, therefore, that this change in form is a mere colorable departure from the disclosure of the patent, and does not avoid infringement.* We think no other conclusion can be reached unless (1) it appears that the patentee departed from the prior art only in his choice of the material of the rim so that the form (material) of the rim is of the essence of his invention, or (2) the language of the specification and the representations made in argument before the Patent Office are to be taken to exclude this change in the material of the rim.

The Relation of the Hopkins Invention to the Prior Art.

In administering the patent law, the Court first looks into the art to find what the real merit of the alleged invention or discovery is (*Eibel Co.* vs. *Paper Co.*, 261 U. S., 45, 63). An examination of the art convinces us, as it convinced the Court of Appeals for the Third Circuit**, that the real merit of Hopkins' invention lay in

---

*_Winans_ vs. _Denmead_, 15 How., 330, at 338-339; _Machine Co._ vs. _Murphy_, 97 U. S., 120 at 125; _Temco, etc., Co._ vs. _Apco, etc., Co._, 275 U. S., 319; and _Sanitary, etc., Co._ vs. _Winters_, 280 U. S., 30 at page 42.

**See the finding of the Court of Appeals quoted *ante* page 4 and its quotation of Hopkins' testimony (pamphlet, p. 57):

> "Now, we mounted that in a support which would permit it to do all of its vibrating in producing the sound and at the same time keep it in the position that it was intended to be and prevent the flimsier portions of the cone near the edges from breaking up or fluttering when we applied a reasonable amount of energy to it."

the production of a thoroughly practical loudspeaker by combining a conical-shaped paper device of proper size, acting in free air, with a flexible rim coupling the cone to a rigid frame.

1. The only sounding-board of the cone type in the prior art is the disclosure in an article by **Starling & Cole*** in "Talking Machine News" of July, 1907 (Tr., 470).**

It is the nearest thing to Hopkins that the prior art affords. It went beyond the heavy flat sounding-boards on the scientifically correct principle of a light stiff conical sounding-board made of paper, but it lacked the other two elements of Hopkins' combination, the rigid frame, and interposed flexible rim. **So far as our present inquiry is concerned, it emphasizes the fact that Hopkins' invention lay in the combination of these three elements, not in the choice of any particular material for the rim.** It has been the backbone of the attack on the validity of Hopkins' patent since the article was first brought to light in the *Western Electric* case.***

The published article is quite clearly expressed and easily understood, as is the structure of the Hopkins patent itself and most of the other prior art disclosures. We do not desire to burden the Court with our own description of things that are already plain. We shall,

---

*In this discusssion we print in black face type the names of the authors of those publications and patents specifically mentioned in the opinion of the Circuit Court of Appeals for the Ninth Circuit.

The **Rogers patent 599,867 (Tr., 319) is not a sound emitter, but the sound pick-up device for a telephone transmitter. The opinion of the lower Court in the instant case suggests (Tr., 124) that it might be reversed to act as a sound emitter. The point need not be argued because, if that were done, the resulting loudspeaker would have all the defects and limitations of the **Starling & Cole** paper cone loudspeaker.

****Lektophone Corporation* vs. *Western Electric Co.*, 20 Fed. (2d), 150 Pamphlet, pages 25, et seq.

however, include in this brief quotations from decisions of the Courts that have affirmed the validity of the Hopkins patent so that this Court may conveniently read, if it desires to do so, what the other courts have said about these several prior art devices and their relation to the Hopkins patent. These quotations may be taken as elaborations of our briefer statement of plaintiff's position with respect to the several devices.

In the *Western Electric case*, Thacher, D. J., said (Pamphlet, p. 28):

> "The Starling & Cole publication of 1907 disclosed a vibrating cone employed as a sounding board without sound-box or horn. This extraordinary simple home-made device, constructed of a cardboard mailing tube and a paper cone, was shown to have a purity of tone surprisingly good in the low frequencies which are difficult to reproduce in a sound-box and horn combination. Volume was lacking, and when to increase its volume this device was driven with increased power unwelcome buzzing and rattling sounds were heard, apparently caused by the shaking of the unsupported edges of the extremely light paper cone.
>
> * * * * * *
>
> Starling and Cole disclose the vibrating cone used as a sounding board in free air, but in this device the cone is supported at its apex and its edges are entirely unsupported."

In the *Brandes case*, the Court of Appeals for the Third Circuit said (Pamphlet, p. 57):

> "Of course, Hopkins is charged with notice of the earlier publication by Starling and Cole, which was published in London in 1907 in the talking machine

art. This showed a conical-shaped sounding board, but of such smaller size that it was considered a mere plaything and left no impress on the art. But even if its size had been increased, which in point of fact it was not, its edges would have fluttered or been subject to 'weaving' which would have destroyed its efficiency when low notes were attempted to be given off."

In the *Colonial case*,* Galston, D. J., said (Pamphlet, pp. 121-122):

"Starling and Cole certainly did not disclose the Hopkins' acoustic device. They taught at most:

1. The use of a conical paper diaphragm mounted upon a cardboard tube.

2. The diaphragm had neither annular rim nor fixed support."

Even in the instant case, the Court of Appeals of the Ninth Circuit agreed as to this **Starling & Cole** disclosure, saying (Pamphlet, pp. 90-91):

"It seems that when a cone of thin paper with a free base, such as Starling and Cole invented or proposed, is violently vibrated to reproduce sounds, on certain pitches, that is, with a certain number of vibrations, the free edge of the cone ceases to vibrate bodily with the balance of the cone. Its vibrating edge divides itself into nodes and loops—the nodes are the stationary points, and the loops the portion where the edge vibrates between these stationary points. This causes the cone to produce sounds of its own on certain pitches as well as to reproduce

*Lektophone Corp. vs. Colonial Radio Corp., E. D., N. Y., July 10, 1930, unreported (Pamphlet, p. 112).

sound, and when used as a radio loud speaker causes sharp and unpleasant sounds known as 'blasting' to intermingle unpleasantly with the music, or voice, or sound being reproduced."

The **Starling & Cole** article has been before the Courts of France, England and Germany and has been found by each of them not to disclose or suggest the Hopkins invention.*

2. The large number of other patents relied upon by defendant may be classified as follows:

(a) Sounding-boards of the flat type including the French patent to Ader, 127,180 of 1878 (Tr., 465); British patent to Lodge, 9,712 of 1898 (Tr., 314); and U. S. patents to Shanks, 822,024 (Tr., 330), **Lumiere,** 986,477 (Tr., 352) and **Lumiere,** 1,036,529 (Tr., 363).

(b) Sound-box and horn combinations of the old phonograph art including U. S. patents to Kraemer, 890,142 (Tr., 341), Edison, 963,362 (Tr., 345), English, 1,064,062 (Tr., 378), Brown, 1,096,676 (Tr., 387), Johnson, 1,180,461 (Tr., 393), Elfering, 1,182,078 (Tr., 403), and English 1,192,289 (Tr., 406); and British patents to Stroh, 9,418 of 1899 (Tr., 423), Stroh, 3,393 of 1901 (Tr., 428), Brown, 29,833 of 1910 (Tr., 452) and **Brown,** 1,157 of 1911 (Tr., 459).

(c) A miscellaneous group including the mechanical telephone, U. S. patent to **Maxwell** No. 216,051 (Tr., 308), the **Dann & Lapp** electrical telephone transmitter U. S.

*See the decree of the Court of Appeals at Paris in the Chanoit case (Pamphlet, p. 167); the opinion of Mr. Justice Tomlin in the High Court of Justice, Chancery Division in London (Pamphlet, p. 205); and the decision of the 16th Civil Court of the Provincial Court 1, of Berlin (Pamphlet, p. 252).

patent 338,660 (Tr., 470), and the electrical telephone transmitter U. S. patent to **Rogers**, 599,867 (Tr., 319) referred to in the footnote (*ante*, p. 22).

The Flat Sounding Board Patents.

None of the flat sounding board patents is of sufficient importance to warrant particular notice except **Lumiere** (Tr., 352 and 363). This is a flat sounding board made of paper provided with plaits which gradually diminish in depth from the center of the diaphragm to the clamping rings. The provision of the plaits, however, does not take the **Lumiere** diaphragm out of the flat sounding board class. It is the same as any flat diaphragm except that it is stiffened in such a manner that the stiffness gradually diminishes from the center toward the clamping rings. There is no cone and no bodily sound-producing movement of a large light surface. The movement is a simple bending, of a one-piece structure, progressively decreasing in amplitude from the center toward the periphery.

These **Lumiere** patents have been before each of the Courts that have considered the Hopkins invention. Much stress was laid on them in the opinion of the Court of Appeals for the Ninth Circuit in the instant case (pamphlet, pp. 94-96).

In the *Sylo case*,* which was the first case tried, Campbell, D. J., said (Pamphlet, p. 9):

> "* * * * nor are the claims limited by the prior art as shown in patents No. 562,753 to Amet, No. 822,024 to Shanks, and No. 986,477 to Lumiere, because while these patents all showed attempts to produce self-sustaining sound waves on unconfined

**Lektophone Corp.* vs. *Sylo, etc., Co.*, 11 Fed. (2d), 421 (Pamphlet, p. 1).

air, without the interposition of a sound box or amplifying horn, none of them suggested the idea of accomplishing that purpose by means of a cone of the character described, and actuated in the manner described and claimed in the patent in suit."

In the *Western Electric case,* Thacher, D. J., said (Pamphlet, p. 28):

"Lumiere's diaphragm of plaited paper (U. S. Patent No. 986,477) is most strongly urged as anticipation, as it was before Judge Campbell. Claim is here made that the plaited construction of Lumiere embodies the conical construction of Hopkins with improvements, but I am unable to find in this device equivalents to Hopkins either in structure or in function."

In the *Brandes case,* Judge Bodine in the District Court* held that the **Lumiere** patents completely anticipate Hopkins' invention (Pamphlet, p. 49). This led to a full discussion of these patents by the Court of Appeals for the Third Circuit in the opinion reversing Judge Bodine. The Court of Appeals said (Pamphlet, pp. 58-59):

"Such being Hopkins' disclosure, we next turn to the basic question on which the Court below decided the case, namely, whether Hopkins' disclosure was anticipated by Lumiere in his patents Nos. 986,477 and 1,036,529 of 1912. It is a significant fact that although Lumiere's device was adapted by such a strong company as the Victor, it was never passed into approving public use, and that company itself is using a cone which the General Electric Company makes as licensee under Hopkins' patent. But apart

*16 Fed. (2d), 934 (Pamphlet, p. 46).

from Lumiere's patents having attained no position in the practical art, it is quite clear that he had no conception of that which constituted the gist of Hopkins' invention. Indeed, it seems to us that on final analysis Lumiere had in reality merely a flat sounding board. It is true he used paper and has a construction which may be likened in some sense to a cone, but it seems to us the real plane of Lumiere is the central zone of his paper, for while there is an edge around the apex made by the foldings or corrugations of his paper, and it can therefore be said that he has an outer edge of a dished or quasi-conical shape, it is to be observed that there is a corresponding corrugation structure on the other side of his central or medium zone, and that the two exterior edges of his corrugations, front and back, are not really two individual side cones but are unitary in reality and one structure and that the real plane is the median flat horizontal one midway between the exterior side corrugations. Moreover, making corrugations of this sort changes a fairly flexible plane into a relatively stiff, unyielding structure. Indeed, it would seem that his corrugations were for structural or stiffening purposes rather than for sound purposes. Moreover, the outer edge of Lumiere's paper corrugated structure is flattened and is clamped—and we venture to think as a continuation of his flat median surface—to the rigid structure which holds the cone in place. Lumiere, therefore, not having the flexible rim between his cone proper and his rigid support, his sounding board moves as a unitary structure from the edge of the restraining frame to the central part, while in Hopkins' the cone moves as a whole, unrestrained and unlimited by the rigid frame. Tested by the standard of means and the product, the art never would have had a

practical sounding-board had it stopped with Lumiere. It was Hopkins who gave a successful combination which produced low, clear tones on a conical sounding-board in free air."

In the *Colonial case,* Galston, D. J., said (Pamphlet, p. 122):

"Lumiere discloses a flat diaphragm. I agree with both Judges Campbell and Thacher that these patents fail to disclose the conical construction of Hopkins, either in structure or in function."

These **Lumiere** patents were considered and found not to disclose or suggest the Hopkins invention by the Courts of France, England and Germany.*

On the particular issue of infringement with which we are now concerned, it is clear that the Lumiere diaphragm affords no support for defendant's position that Hopkins' patents ought to be limited to a tympanum made in a single piece of the same material throughout. Lumiere's diaphragm was made of a single piece of paper, but it did not have a conical sounding board coupled to a rigid frame by a flexible rim. There was no bodily movement of a sounding board of large area as in Hopkins, but a simple flexing of a flat sounding board stiffened by radial plaits.

This **Lumiere** diaphragm also negatives the thought that Hopkins' invention lay in the mere increase of the area of a direct-acting sounding board to a diameter more than nine inches. **Lumiere's** diaphragm exceeded that size.

---

*See the Judgment of the Civil Tribunal of the Seine in the Radio-Electrique case (Pamphlet, pp. 178-180); the affirmance of that decision by the Court of Appeals of Paris (Pamphlet, p. 189); the decision of the Berlin Court (Pamphlet, p. 252), and the opinion of the High Court of Justice in England in the Brown case (Pamphlet, p. 207).

The Sound Box and Horn Combination Patents.

Each of these patents discloses a phonograph sound box associated with a horn. In each the diaphragm of the sound box has a conical central portion and a flexible rim supported by rigid rings that constitute the enclosing side walls of the sound box. In some of them the flexible rim is a plane peripheral extension of the cone (Kraemer, Tr., opposite pp. 340, 342; Edison, Tr., 345; Johnson, Tr., opposite pp. 392, 394; Stroh, Tr., 428); in others it is made of more flexible material, such as "soft rubber" or "other materials than rubber, such as leather, paper, thin collodion, etc." (Edison, Tr., 348), "rubber or other suitable solid resilient or yielding material" (English, Tr., 380); "tissue paper or other suitable material that will not exert appreciable restraint upon the diaphragm" (Brown, Tr., 391); "gold beater's skin" (Elfering, Tr., 404); "cork or a composition of cork or * * * other suberous or suitable yielding material" (English, Tr., 409); or a "thin ring of flexible material * * * of tissue paper, silk, or other suitable material" (Brown, British patent 29,833, Tr., 455 and 457) or "a ring of resilient material of extreme thinness" such as "glazed tissue paper one-three thousandths of an inch thick or thin collodion film" (**Brown** British patent 1,157 of 1911, Tr., 461 and 463).

Hopkins' differentiation from these patents did not lie in any choice of particular form or material for the flexible rim. Some of them show plane peripheral extensions of the cone like Hopkins and others show rims made of more flexible material like defendant's.

These sound-box and horn combination patents have likewise been before each of the courts. In the *Sylo case*, Campbell, D. J., said of them (Pamphlet, [illegible] p. [illegible]3):

> "The invention of the patents in suit seems to me to be something more than a mere improvement

upon the sound-box horn combination of the prior art, because the patentee of the patents in suit has discarded the sound-box horn principle and proceeded successfully along the line of sounding boards.

He discovered that a large stiff, light cone of vibratile material, if properly supported, would vibrate to all the essential frequencies of the audible spectrum, and would faithfully reproduce on unconfined air the original sounds when a mechanical vibration representing those original sounds was imparted to the apex of the cone."

In the *Western-Electric case*, Thacher, D. J., discussed them, alone and in connection with **Lumiere**, as follows (Pamphlet, pp. [redacted] 28-30):

"In various prior art devices of the sound-box horn type, and in telephone receivers, small rigid conical diaphragms, usually of metal construction with flexible rims to permit vibrations of the cone as a whole and without flexing, are found, as illustrated in Stroh, British Patent 3,393; Gaumont, French Patent 331,226; Edison, U. S. Patent 963,362; Brown, British Patent 29,833, and English, U. S. Patent 1,064,062. Of these patents, only two were considered by Judge Campbell—the British patent to Stroh, which is mentioned in his opinion, and the United States patent to English, which is referred to by the Examiner. Each is typical of the others, all of which differ from Hopkins in that they have to do with telephone receivers or sound boxes. Brown confined his claims to telephone receivers but in his specifications said: 'Where it is desired to make the sounds travel out into a room a receiver of large size is preferable.' This is purely casual and obscure, but it is as close as anyone came to Hopkins. What Hopkins really did was to take

the small conical diaphragms used in sound boxes, throw away the horn and sound-box, and by experiment determine the dimensions required in such a diaphragm for radiating sound waves in free air. This seems a simple thing to have done, in view of the prior development of similar diaphragms in sound-box construction. But the prior art discloses that he was not only the first to construct a sounding-board upon these principles but that his construction was a valuable improvement. It is insisted that what Hopkins did was not invention, *Atlantic Works* vs. *Brady,* 107 U. S., 192, and similar cases, being cited. In brief, the argument is that Hopkins took the large diaphragm of Lumiere and substituted for its plaited construction the conical construction of Stroh, to give it an equivalent stiffness, and the annular rim hinge of Stroh to give it bodily motion. If it is meant that Hopkins is merely a substitution of equivalents for Lumiere, and, therefore, lacking in invention under the rule in *Smith* vs. *Nichols,* 21 Wall., 112, 119, the argument fails because Hopkins' rigid cone and flexible annular rim, although found in Stroh, has no equivalent in Lumiere. On the other hand, if Hopkins is not a mere substitution of equivalents for Lumiere he must be conceded a combination of elements novel in a sounding-board, although old in a sound-box. There is not to be found in the prior art a sounding-board such as Hopkins designed and had patented as his invention, and it is not enough to defeat his patent to say that the elements of his claims are already found in the prior art in isolation or in other combination.

Bates vs. *Coe,* 98 U. S., 31;
Imhauser vs. *Buerk,* 101 U. S., 647, 660;
Barbour vs. *Otis,* 240 Fed., 723, 726.

> "His was a combination and arrangement of old elements capable of better results than the old devices (*Loom Co.* vs. *Higgins*, 105 U. S., 580, 591). Of course, the application of these rules must not be carried too far, and if the change from sound-box to sounding board construction were so obvious as to occur to an ordinary skilled mechanic familiar with the prior art undoubtedly the rule in *Atlantic Works* vs. *Brady, supra,* would govern, as is clearly stated in *Loom Co.* vs. *Higgins, supra.* But I am satisfied that the tympanum of novel construction which is covered by the claims of Patent No. 1,271,529 which are in suit involves invention, and was not merely the exercise of mechanical skill."

In the *Colonial case,* Galston, D. J., discussed them in some detail and found that they did not anticipate (Pamphlet, pp. 122-124). They were considered, and rejected as anticipations, by the French, German and English Courts.*

The Maxwell Mechanical Telephone Patent.

The patent to **Maxwell** 216,051 (Tr., 308) relates to the ancient art of mechanical telephones now long forgotten except by those of us who played with them as boys. It illustrates and describes what is said to be an improvement over an earlier arrangement of the same inventor, which earlier arrangement is illustrated in Fig. 1 of the patent. The improvement consisted in the re-

*See the judgment of the Civil Tribunal of the Seine in the *Chanoit case* (Pamphlet, p. 152) the affirming decree of the Court of Appeals of Paris (Pamphlet, p. 167), the judgment of the Civil Tribunal of the Seine in the *Radio-Electrique case* (Pamphlet, pp. 180-181) and the decree of the Court of Appeals of Paris affirming that judgment (Pamphlet, p. 189), the decision of the British Court particularly discussing the patents to Brown and to Stroh (Pamphlet, pp. 206 and 207-8), and the decision of the German Court (Pamphlet, pp. 243-245).

arrangement of the stretched sheep-skin membranes so as to **eliminate the idea of a sounding-board** and substitute a resonant chamber.

That the earlier and less improved arrangement illustrated in Fig. 1, upon which defendant now relies, did not give good results is shown by the patentee's statement (pat., p. 1, bottom of first column, Tr., 309):

> "Now my invention herein claimed relates to the construction of a vibratory apparatus of quite different form and of a much better result from the one hereinbefore described."

The disclosure of the construction of Fig. 1 is incomplete (first column of patent, Tr., 308-309), but it may be assumed from the drawing that the vibrators of the earlier construction were like the vibrators of the improved construction. As to these, the patentee says (pat., p. 2, first column, Tr. 310):

> "The vibrators are stretched and held taut by means of the button *e* on the wire *T;* and but for the button *i* on the wire outside of the box the vibrators would collapse"

Clearly such a vibrator is not the light stiff paper cone of Hopkins, or its equivalent.

Furthermore, there is no rigid frame and interposed flexible rim in **Maxwell.** The vibrators are fastened directly to the edge of a circular opening in a wooden sounding-board. The patentee says (Pat., p. 1, first column, Tr., 309):

> "* * * the vibrators are made of sheepskin or like material, and should be fastened upon the sounding-boards over the openings therein while in a wet and plastic condition, and then have their central

> portion drawn out and stretched until they assume a funnel-like form, and then be allowed to dry and retain that form."

Where Hopkins shows a conical sounding-board supported from a rigid frame by a flexible rim to permit the bodily sound-producing motion of the conical sounding-board, **Maxwell** discloses a wooden sounding-board having a hole in its center to the edge of which is fastened a conical sheepskin vibrator having stiffness only when it is held taut by a stretched wire and necessarily without any interposed flexible rim, since it is the purpose of the vibrator to impart the vibrations to the sounding-board, and an interposed flexible rim would prevent that.

Plaintiff's position as to the structural relation of this **Maxwell** patent to the Hopkins invention is summed up in the words of Galston, D. J., in the *Colonial case* (Pamphlet, p. 122):

> "Maxwell in No. 216,051 shows a stretched sheepskin membrane in a mechanical telephone * * *. The sounding board of Maxwell is certainly not the flexible rim of Hopkins."

Contrasting this patent with Hopkins shows again how Hopkins invention lay in the combination of a large light stiff conical sounding-board, ~~to~~ a rigid frame and an interposed flexible rim. **Since the Maxwell patent shows no rim at all, it cannot have any effect to limit Hopkins patent to the use of a particular material in the rim.**

This patent was much relied upon by the defendant in the *Sylo case* and is fully discussed by Campbell, D. J. (Pamphlet, pp. 8, 9). It was not again pressed upon the attention of any of the American Courts passing on the validity of the Hopkins patent until the present case.

The Civil Tribunal of the Seine in the *Radio Electrique case* adopted Judge Galston's views about it (Pamphlet, p. 180); and see affirmance of that judgment by the Court of Appeals of Paris (Pamphlet, p. 189).

The Dann & Lapp Telephone Transmitter Patent.

The patent to **Dann & Lapp** 338,660 (Tr., 470) shows a telephone transmitter of even smaller size than the sound-box horn diaphragms. It has a conical vibrator at the base of the telephone mouthpiece. The diameter of the base of the cone is said (Tr., 471) to "equal and even slighfly exceed that of the contiguous inner end of the mouthpiece B, of which it forms practically a conical extension." The inner end of a telephone mouthpiece is about one-half inch in diameter. The Court of Appeals assumed that the structure might also be applied to a telephone receiver (Tr., 123). If so, the **Dann & Lapp** structure might be classed with the sound-box horn combination patents hereinbefore discussed. How far it is from the Hopkins device is indicated by the provision of dampers on the flat portion of the diaphragm to "choke out the metallic clang" (Pat., p. 2, lines 80-84, Tr., 474).

The rejection of this patent as of anticipating or limiting effect by Galston, D. J. in the *Colonial case* (Pamphlet, pp. 122-123) correctly expresses plaintiff's position about it. The disclosure in no wise resembles the Hopkins invention, and the patent has not been discussed in any other case.

The Nature of Hopkins' Inventive Act Looked at From the Point of View of the Prior Art.

It seems to us that the real character of Mr. Hopkins' invention and how it is different from what went before

it, is very clear. The practical utility of his simple three-element device is too well established to require argument here. Mr. Hopkins tells in an interesting and illuminating way (Tr., 73-74), the history of the invention. He says that after long experimenting in the Edison laboratories on sound-box and horn combinations, he despaired of overcoming the inherent deficiencies of that combination and turned to sounding-boards. After trying out many known types of sounding boards and finding them too heavy, he turned to paper structures and finally tried the conical shape,—

> "with the idea that it was a light and very stiff structure, it almost immeditely showed a big advance over any of the other structures that we tried" (Tr., 73).

The paper cone was in principle the same as the direct acting sounding-board of **Starling & Cole**, which those scientists found to give remarkably good sound reproduction, although of very small volume, so small that*

> "It would serve excellently to try over records without disturbing others in the house when they need to be repeatedly played as in the study of folk-songs and language lessons by aid of the phonograph."

But the use of that device was (Hopkins, Tr., 74)

> "limited by the waving or rattling that invariably accompanied a simple cone, * * *. When the cone vibrated, the outer edge of the cone would break up into nodes or loops, the nodes being comparatively still portions which moved with the movement of the cone, but the loops the portions in which one wave was going out while another was going in. In other

*Last sentence of article, bound opposite Tr., page 470—three pages.

words, it was a bell motion of the paper of the cones."

So Hopkins added to this sounding-board a flexible rim anchored at its peripheral edge in a rigid frame. This flexible rim permitted the sound-creating movements of the cone but inhibited the troublesome nodes and loops that gave rise to the rattling or blasting (Tr., 74).

As we look back over this research which started with the sound-box and horn combination, we see that Hopkins dispaired of getting the desired results with that combination, turned to flat sound-boards, and ended with the thing disclosed in the patent. His accomplishment may be characterized in either one of two ways:

(a) He took the small conical diaphragms used in sound boxes, threw away the horn and sound box and by experiment determined the dimensions required in such a diaphragm for radiating sound waves in free air;*

(b) He took the interesting toy of **Starling & Cole** with its paper cone wholly unsupported at its edge and effectively added to it a supporting structure that would make the thing practical, permitting it to vibrate in its sound-producing way and yet restraining it from such vibrations as would produce blasting. Specifically, this was effected by adding the rigid supporting rings and interposing between the rings and the cone a flexible rim.**

---

*We adopt here the language of Thacher, D. J., in the *Western Electric case* (*ante*, pp. 31-32).

**In this analysis the Lumiere patent does not come into question at all. Either Lumiere is a direct anticipation of Hopkins or else it is evident that it required invention to do what Hopkins did. In any case it cannot be said that Hopkins followed Lumiere. It was precisely because he did not follow Lumiere that he succeeded.

Looked at from the first point of view, the Hopkins invention is, as Campbell, D. J., said, in the *Sylo case,* (*ante,* pp. 30-31) "something more than a mere improvement upon the sound-box horn combination of the prior art, because the patentee of the patents in suit has discarded the sound-box horn principle and proceeded successfully along the line of sounding-boards."

Looked at from the second point of view the Hopkins invention may be said to be a last step invention, in the sense that it added to one of the many prior art unsatisfactory direct-acting devices just those elements necessary to make it a practical operative loudspeaker.

From neither point of view is it any wise essential that the interposed flexible rim should be of the same material as the central conical portion of the tympanum.

On the contrary the disclosures of the cone diaphragm structures of the sound-box horn combination patents show that no patentable novelty could be predicated upon the material of the rim.

It was not in the material of the rim, but in throwing away the sound-box and horn and enlarging the structure to produce a direct-acting loudspeaker that Hopkins departed from the prior art of sound-box and horn structures. Having, by this exercise of inventive ingenuity, bridged the gap between the soundbox and horn constructions and the successful direct-acting loudspeaker, it requires no more than engineering skill for someone else to use in Hopkins' combination the rims of various materials that had previously been used in the small diaphragm constructions.*

Crown Cork & Seal Co. vs. *Sterling, etc., Co.,* 217 Fed., 381, at page 385; and *Concrete Appliances Co.* vs. *Meinken,* 262 Fed., 958, at page 961.

Is the Defendant's Structure Excluded from the Monopoly by the Disclosure of the Specification and the Patent Office Proceedings?

We preface discussion of the patent office proceedings by a statement of what we understand to be the law as to estoppel, on the one hand, and as to the interpretation of the patent specification by extraneous reference to things said in argument, on the other hand.

It is plaintiff's position that the rule of estoppel arising from patent office proceedings is limited, by all authority, to the situation where an applicant, during the prosecution of his application, cancels a broad claim and replaces it by a narrower claim. After that he is estopped to assert that the limitations imposed upon the narrower claim are not essential, or to ask that the narrow claim be interpreted to have the scope of the broader canceled claim. Within that limitation the rule of estoppel is well established; although it is a somewhat anomalous rule. Beyond that limit this Court has never extended the doctrine* nor has any Court of Appeals, and the

---

*The pertinent cases in this Court are: *Leggett* vs. *Avery*, 101 U. S., 256, 259-260; *Goodyear, etc., Co.* vs. *Davis*, 102 U. S., 222, 224-228; *Mahn* vs. *Harwood*, 112 U. S., 354, 361; *Cartridge* vs. *Cartridge*, 112 U. S., 624; *Sargent* vs. *Hall*, 114 U. S., 63, 86; *Shepard* vs. *Carrigan*, 116 U. S., 593, 597-8; *Sutter* vs. *Robinson*, 119 U. S., 530, 541; *Crawford* vs. *Heysinger*, 123 U. S., 589, 606; *Watson* vs. *Cincinnati Ry. Co.*, 132 U. S., 161, 165; *Roemer vs. Peddie*, 132 U. S., 313, 316-317; *Phoenix, etc., Co.* vs. *Spiegel*, 133 U. S., 360, 367-368; *Dobson* vs. *Lees*, 137 U. S., 258, 265; *Royer* vs. *Coupe*, 146 U. S., 524, 529-532; *Corbin* vs. *Eagle Lock*, 150 U. S., 38, 40; *Knapp* vs. *Morss*, 150 U. S., 221, 224-225 and 229; *Morgan, etc., Co.* vs. *Albany, etc., Co.*, 152 U. S., 425, 429; *Lehigh, etc., Co.* vs. *Kearney*, 158 U. S., 461, 469; *McCarty* vs. *Lehigh, etc., Co.*, 160 U. S., 110, 118-119; *Westinghouse, etc., Co.* vs. *Boyden, etc., Co.*, 170 U. S., 537, 558, etc.; *Hubbell* vs. *U. S.*, 179 U. S., 78, 80; *Kokomo, etc., Co.* vs. *Kitselman*, 189 U. S., 8, 14-19; *Singer Co.* vs. *Cramer*, 192 U. S., 265, 284; *Computing, etc., Co.* vs. *Automatic Scale Co.*, 204 U. S., 609; *Weber, etc., Co.* vs. *Freeman, etc., Co.*, 256 U. S., 668; *I. T. S. Co.* vs. *Essex Co.*, 272 U. S., 429, 436.

majority of the Courts of Appeals (1st, 2d, 3d, 4th, 7th and 9th) have explicitly refused to give any effect of estoppel to statements made by an applicant's attorney during the proceedings in the patent office.*

It was in recognition of this limitation of the rule, and on these authorities, that the Court of Appeals in the instant case found no estoppel (Tr., 129).

Without any aspect of estoppel, and only for the purpose of confirming the Courts' own interpretation of the patent specification, this Court has, on two occasions, referred to things said by the patentee or on his behalf in argument.

That was done in *Goodyear, etc., Co.* vs. *Davis,* 102 U. S., 222, where this Court said (p. 227):

> "We do not mean to be understood as asserting that any correspondence between the applicant for a patent and the Commissioner of Patents can be allowed to enlarge, diminish or vary the language of a patent afterwards issued. Undoubtedly a patent, like any other written instrument, is to be interpreted by its own terms. But when a patent bears on its face a particular construction, inasmuch as the specification and claim are in the words of the patentee, it is reasonable to hold that such a construction may be confirmed by what the patentee said when he was making his application. The understanding of a party to a contract has always been regarded as of some importance in its interpretation."

**American Cone & Wafer Co.* vs. *Denaro,* C. C. A., 1, 297 Fed., 913; *R. Hoe & Co., Inc., et al.,* vs. *Goff Press Co.,* C. C. A., 2, 30 Fed. (2d), 275, and cases cited; *Boyer* vs. *Keller Tool Co.,* C. C. A., 3, 127 Fed., 130, at pages 133, et seq.; *Pangborn Corp.* vs. *W. W. Sly Mfg. Co.,* C. C. A., 4, 284 Fed., 217; *McCormick, et al., Co.* vs. *Medusa, et al.,* C. C. A., 7, 222 Fed., 288; *W. F. Burns Co.* vs. *Automatic, et al.,* C. C. A., 7, 241 Fed., 472; *Fullerton Walnut Growers Ass'n* vs. *Anderson,* C. C. A., 9, 166 Fed., 443; *J. A. Mohr & Son* vs. *Alliance, etc., Co.* (D. C., N. D., Cal.), 14 F. (2d), 793, 798-9, approved and affirmed 14 F. (2d), 799.

In *Westinghouse* vs. *Boyden, etc., Co.*, 170 U. S., 537, this Court (pp. 558-560) again referred to communications made by the applicant during the patent office proceedings in confirmation of the Court's own interpretation of the language of the specification.*

With this understanding of the law, we shall discuss first the changes in claim language under the heading "Estoppel" and then we shall discuss the things said in argument under the heading "Interpretation." We have to look at the parent application (Pltf.'s Ex. 7, Tr., 160) which resulted in patent 1,271,527, as well as at the divisional application (Pltf.'s Ex. 6, Tr., 159) which resulted in the patent in suit.**

Estoppel.

We shall first discuss changes made in the claim language as to the rim; and then discuss changes made in claim language defining the size of the tympanum (cone plus rim).

Changes Made in Claim Language as to the Rim.

The original claims 15, 17, 18, 19 and 20 (A. F. W., pp. 1, et seq.) defined the rim as "**an annular plane** adjacent said support".

During the prosecution of the application several sound-box horn combination patents having small con-

*In that case Justices Shiras, Brewer, Gray and McKenna dissented from the opinion and from the decision of the Court, and Justices Shiras and Brewer joined in a vigorously expressed objection (pp. 581-583) to even that limited recourse to things said in argument.

**The file wrappers are so hard to follow that we have extracted from them and printed separately the file wrapper history so far as it pertains to the subject-matter in issue. See pamphlet "Abbreviated File Wrapper History Including All that Pertains to the Subject-Matter in Issue", referred to hereinafter as A. F. W.

ical diaphragms were brought to applicant's attention by the examiner. In some of these the cone was coupled to the supporting frame by an annular plane peripheral extension of the cone, as in Hopkins. In others the coupling was effected by a rim made of a separate piece of more flexible material. It was evident that as rims of more flexible material had been used in the small sound-box diaphragms so rims of more flexible material could be used in Hopkins' construction.

Applicant thereupon amended his claims, substituting for the words "an **annular plane** adjacent said support" the words "an **annular sustaining rim** adjacent said support" in one of the claims (claim 11, A. F. W., p. 13) and the words "an **annular rim** adjacent said support" in the other claims (claims 12-16, A. F. W., pp. 13-16). When the divisional application was filed this expression "**an annular rim**" was used, as in claims 5, 6 7 and 8 of the patent.

Thus, as to the rim, the patentee deliberately broadened the language of his claims, so that they might not be limited even in terms to a plane peripheral extension of the paper cone.

All thought of estoppel seems to us to be excluded, by that act. It constiutes, indeed, a recognition on the part of the examiner that the form and material of the rim is not an essential characteristic of Hopkins' invention and that the patent monopoly ought not to be limited to a peripheral rim extension of the cone.

Changes Made in Claim Language as to Size.

Some of the original claims (A. F. W., pp. 1, et seq.) defined the size of the structure only by saying that it is "a sound regenerator for directly propagating self-sustaining sound waves in air" (claim 15), or by adding to that the proportional requirement that the base of the conical portion "exceeds in area one-half the effec-

tive area of said tympanum" (claim 16), or "the diameter of the base of said conical portion being substantially eight-tenths of the diameter of said circular aperture in said support" (claim 18).

Others of the original claims specified a tympanum (cone plus rim) "exceeding nine inches in diameter" (claims 17 and 20).

All of these claims were rejected (A. F. W., 3) on the sound-box and horn combination patents, with the remark that "The size of the diaphragm is not a patentable limitation."

The applicant declined to accept that ruling and, by the first amendment (A. F. W., 7-8) added three more claims (39, 40 and 41) defining the tympanum as having "a free area exceeding nine inches in diameter"; and one claim (57) defining the size of the tympanum as

> "a vibratory area of sufficient size to effect, without amplification, the regeneration from the record of sound waves of relatively large volume and carrying power."

The claims were again rejected on the sound-box and horn combination patents taken in connection with Lumiere (A. F. W., 9-10).

The applicant, however, persisted. He added in the next amendment two claims (1 and 2, A. F. W., 10) in which the size of the tympanum was defined as

> "of sufficient area to impart to the surrounding free air, when the tympanum is so vibrated, sound waves substantially corresponding in intensity to the recorded sound waves".

At the same time original claims 15 to 20 were rewritten. In some of them the broader definition of size just above quoted was incorporated (claims 11, 12, 14

and 15), and in others (claims 13 and 16) the size of the tympanum was defined as "exceeding nine inches in diameter".

Again the examiner rejected the claims on the same references (A. F. W., 16) and in a further effort to find claim language, not unduly restricted but differentiating his invention from the horn and sound-box combination patents, applicant inserted in the claims the words "without an amplifying horn or chamber" (A. F. W., 17).*

In the next office action, the examiner, withdrawing now from his position that applicant had made no invention, rejected the claims on the ground that they were indefinite as to size. But the applicant insisted upon claims in which the size of the tympanum was defined in both ways, and the examiner yielded.

When subsequently the claims for the acoustic device *per se* were transferred to the divisional application which resulted in patent 1,271,529 here in suit, they included present claims 1, 2, 3, 5 and 7 of the patent in which the size of the tympanum is defined as "exceeding nine inches in diameter", as well as present claim 4 of the patent which defines the tympanum as

> "of sufficient area to impart to the surrounding free air, when vibrated, sound waves substantially corresponding in intensity to the original sound waves."

The divisional application as filed also included a claim numbered 12 (A. F. W., 25) which defined the size of the tympanum as

> "of sufficient area to impart to the surrounding free air, when vibrated, sound waves substantially corresponding in intensity to the original shocks or vibrations".

*These words were subsequently erased as unneccessary (A. F. W., 24).

This claim was replaced by claim 8 of the issued patent which defines the tympanum as

> "of sufficient area to produce self-sustaining sound waves in the surrounding air when vibrated."

In this contest between the patentee and the patent office, there was no cancelling or amendment of broader claims to introduce limitations which plaintiff now seeks to delete. There was an insistence upon broad claim language with which plaintiff is now satisfied. **The conduct of the applicant was that of a person who is determined that the monopoly shall not be limited by literalism to a tympanum (cone plus rim) having an over-all diameter of nine inches. So far from manifesting an intention to disclaim any functionally equivalent structure in which the over-all diameter of the tympanum might be less than nine inches, his conduct plainly manifests a contrary intention.**

And the examiner's acquiescence, after full discussion of the most important prior art, strengthens the *prima facie* presumption in favor of the patent.

Interpretation.

We do not think that this Court will find any need to resort to the file wrapper history for confirmation of its interpretation of what is said within the four corners of the patent specification.

We think the meaning is very plain to anyone who reads the specification, as this Court will read it, intent to discover the principle of which the structure particularly disclosed is merely the reflex and embodiment—the law of cooperative action of the three-element combination.

Anyone reading the specification with that purpose would certainly have in mind the question **why** the large,

light, stiff, paper cone is used and **why** a plane peripheral rim is used to couple the cone to the rigid frame. It seems to us that the answer to those questions can be deduced by a reasonably intelligent person from the stated purpose alone, which is said to be (Pat., p. 1, lines 94, et seq.):

> "the provision of a tympanum of novel construction, which is capable of responding to the high frequency vibrations employed in the reproduction of sounds, and of imparting these vibrations to a large body of air."

The largeness and stiffness of the paper cone are necessary to impart the vibrations to a large body of air, and the lightness is necessary to enable it to respond to the high frequency vibrations employed in the reproduction of sounds. If the supporting and protective frame were clamped directly onto the peripheral edge of the cone, its ability to respond to the high frequency vibrations would be destroyed. The rim that couples the cone to the frame is therefore made flat so that it will yield, and not inhibit the sound-producing movements of the cone.

When the patentee comes to the specific description of preferred embodiment that the law requires him to make, and which he illustrates in the single figure of the drawing, he says, referring to the drawing by reference letters, that the tympanum L, made up of the conical portion *l'* plus the plane peripheral rim *l*, should have an over-all diameter not less than nine inches and that the "base of the conical portion should exceed in area one-half of the area of the entire tympanum."*

*Even these sizes are said to be "approximate" and the proportions are said to be subject to some variation even when the designer limits himself to the construction as shown in the drawing (Pat., p. 2, lines 96, et seq.).

Is it not clear that the conical shape gives stiffness over a large area to impress the vibrations on a large body of air; in accordance with the stated purpose? Is it not equally clear that the conical portion is coupled to the rigid frame by a plane peripheral rim in order that its capacity to respond to the high frequency vibrations may be preserved; that the rim portion is flattened to give it yielding flexibility, and that if the patentee had not desired the quality of yielding flexibility in the rim as distinguished from the quality of unyielding stiffness in the conical portion, he would have extended the conical shape to the rigid support, omitting the flat rim?

So also it is pertinent to ask why the patentee mentions the necessary size of the conical portion, in addition to the over-all diameter of the tympanum (cone plus rim). Is it not clear that he does that because the conical portion (elsewhere referred to as the "active conical portion") is the effective sound producer of which the rim is the yielding support?

Contending that the scope of the monopoly should be limited to cone and rim made from a single piece of crisp, strong material throughout, defendant particularly stresses the following sentence of the specification (p. 2, lines 103, et seq.):

> "It is of vital importance that the tympanum be made of crisp, strong material, having considerable rigidity within itself, * * *."

It seems to us that any intelligent reader would understand that this rigidity is important only in the active conical portion of the tympanum, so that it may be capable of imparting the high frequency vibrations to a large body of air. That the rigidity should extend into the rim is inconsistent with the stated purpose of the rim, as it is inconsistent with the disclosed plane peri-

pheral form of the rim. Indeed, we think that the statement just quoted, when read in the light of the immediately following phrase, fairly indicates, even if consideration should be given only to mere matters of phraseology, that the crisp, strong material having considerable rigidity within itself is important only in the conical portion of the tympanum. Although the patentee says, in the part of the sentence already quoted, that the "tympanum" should be of crisp, strong material, yet in the following clauses, he says "and it is also of vital importance that the tympanum *as a whole* be extremely light and have as little inertia as possible without a weakening effect". The words "tympanum as a whole" in the last phrase of that sentence would seem to embrace something more than the word "tympanum" as used in the first phrase of the sentence. It is, of course, important that the rim as well as the cone should be extremely light and have as little inertia as possible without a weakening effect.

In the next two sentences, the word "tympanum" is quite definitely applied to the conical portion alone. It is said that "the tympanum is shown of conical form" and that the "conical shape is given the tympanum" so that the vibrations impressed upon its apex will move the whole cone bodily and the intended object, a simultaneous movement of the whole conical portion of the tympanum, will be attained. Is it not plain that if the rim were stiff and rigid, such bodily movement of the conical portion could not be attained; and that it was for this reason that the patentee made the rim portion flat?

If there could be any doubt on that subject, would the doubt not be removed by the next two sentences (Pat., p. 2, line 124, to p. 3, line 5) where the patentee, having reference to the form of the plane peripheral rim, says that it is possible to form radial or concentric corrugations in it and that if this is done some variations may

be made from the proportions given, but such variations will not be great? Such corrugations in the rim affect only its yielding flexibility. The significance of these statements seems clearly to be that the patentee contemplated a variation of inherent flexibility of the rim structure, and said that such variation in inherent flexibility of the rim would permit some corresponding variation in the width of the rim.

Unless we are mistaken in thinking that this is the reasonable interpretation of the patent specification, it is plain that defendant has quite literally followed the disclosed principle of the invention, not only in the shape, material and size of its cone, but also in its rim structure.

It is not difficult to look through the change of form by which defendant has slightly reduced the over-all diameter of the tympanum (cone plus rim), while retaining the principle and mode of operation of the whole combination and the full size of the active conical portion. That has been achieved by reducing the width of the flexible rim, while substituting more flexible material to retain the desired flexibility in accordance with the principle of Hopkins' invention.

But whether this Court's own interpretation of the disclosure in the specification agrees with ours or not, we think that interpretation would not be affected by the patent office proceedings.

So far as the form and material of the rim is concerned, the whole substance of the patent office proceedings is embraced within applicant's deliberate amendment of the claims to change the words "an annular plane adjacent said support" to the words "an annular rim", as they appear in the claims of the patent (*ante*, pp. 42-43).

As to the size of the tympanum as a whole, there was considerable discussion in the patent office. In that dis-

cussion the applicant insisted that a direct-acting loud-speaker of the construction and large area disclosed in the specification is a patentable advance over the use of small cone diaphragms in the sound-box and horn combination, on the one hand, and over the disclosure of the large flat diaphragm of Lumiere's patents on the other hand.

The examiner more than once rejected the claims on reference to the horn and sound-box combination patents, taken in connection with Lumiere; but the applicant insisted and finally prevailed, thereby strengthening the *prima facie* validity of the patent which has since been repeatedly, and always unsuccessfully, attacked on the same ground.

Throughout the patent office proceedings, the applicant endeavored to arrive at a definition of size, other than the specific limitation to an over-all diameter not less than nine inches, and in this he also prevailed, as we have already seen (*ante*, pp. 43-46).

Things Said In Argument with Respect to Size.

In the original specification and claims the expression "self-sustaining sound waves in air" was used. It persisted through the patent office history and appears in claim 8 of the issued patent in the phrase "being of sufficient area to produce self-sustaining sound waves in the surrounding air."

In the first office action the examiner rejected the claims on the sound box horn combination patents, saying (A. F. W., 3):

> "What does applicant mean by self-sustaining sound waves" and "The size of the diaphragm is not a patentable limitation".

In reply applicant paraphrased his description of the mode of operation of the sound box horn combination that appears in the first part of the patent specification, and added (A. F. W., 5):

> "In order to obtain faithful reproduction of the original sound waves, that is, to really regenerate the original sounds, applicant has provided a sound regenerating machine which dispenses with the employment of a horn or trumpet for transforming high tension disturbances into waves of lower tension, and in which the vibration of the stylus by the record are mechanically directly transmitted to a diaphragm which is free to vibrate in unconfined air, which has sufficient area to set in motion a large volume of air, which is sufficiently light and rigid to enable it to move in synchronism with the stylus, and the distance of vibration of which is sufficiently short to permit of a relatively slow movement appropriate for the sound conductivity of air, whereby the regenerated sounds will be self-sustaining and will be accurate reproductions of the original sounds.
>
> Applicant has thus produced a machine in which the sounds are regenerated directly from the record and in open and unconfined air, without the intervention of a sound box and its confined body of air, and without the intervention of any vibration transforming device, such as a horn or trumpet.
>
> So far as applicant is aware the machine of this invention is the first which has ever been constructed which will accurately regenerate the original sounds without distortion, without squeaking, without accentuation of notes of certain pitch, without change in intonation and without any appreciable loss of energy, and which in fact will produce faithful reproductions of the original sounds. * * *"

He then argued that this different structure with its different mode of operation and different result was sufficiently defined in the rejected claims, saying (A. F. W., 6-7):

> "Each of the claims 15-20, inclusive, is drawn to the combination of elements therein set forth as combined in a sound regenerator for *directly propagating self-sustaining sound waves in air.* Each of the devices of the references is an ordinary reproducer having a small diaphragm operating in a sound box having a small volume of confined air, and requiring, in order to set up self-sustaining waves, the intervention of a transforming device, such as a horn or trumpet, to change the high tension vibrations into lower tension waves of greater amplitude." (Emphasis in original.)
>
> * * * * * *
>
> "For these reasons the references cited against claims 15-20, inclusive, do not meet the claims. With reference to claim 17 which specifies a tympanum exceeding 9 inches in diameter, it is submitted that the size of the tympanum is what enables it to effect direct regeneration of the sound. When a horn is employed for transforming high tension disturbances, the size of the tympanum is immaterial. Applicant has practically demonstrated that, to effect direct regeneration from the record of the sounds, a light vibratile tympanum of *substantially* 9 inches in diameter or greater must be employed in order to obtain faithful reproductions." (Emphasis ours.)
>
> * * * * * *

> "The dimensions of the diaphragm and of the conical portion thereof, as set forth in claims 15 to 20 inclusive, are essential elements in a direct sound regenerator, but they are not essential in sound boxes which employ horns or trumpets as do all of the references which have been cited against these claims. This has been demonstrated by the applicant by actual trial."

Defendant laid great stress, in the Court below, upon this last statement, interpreting it to mean that applicant here said that the nine inch limitation is essential. But that limitation appeared only in claims 17 and 20, not in claims 15, 16, 18 and 19 where the size was more broadly defined. Applicant was here saying that the large size **defined in the specification** is essential. That size is **substantially** nine inches in over-all diameter of the tympanum. The patentee, insisting that he should not be boxed in by literalism, demanded and secured claims having phraseology more inclusive than the literal meaning of the words "a free area exceeding nine inches in diameter."

In the second office action the examiner again rejected the claims on reference to the sound box horn combination patents, taken in connection with the disclosure of Lumiere, saying (A. F. W., 9),

> "The size of the diaphragm is held not a patentable limitation. Note, however, that Lumiere discloses a diaphragm exceeding nine inches in diameter."

Still insisting upon the patentability of his invention, and upon his right to adequate claims not literally restricted to particular dimensions, applicant amended the broader claims to define the area of the tympanum as (A. F. W., 10-13)

> "of sufficient area to impart to the surrounding free air, when the tympanum is so vibrated, sound waves substantially corresponding in intensity to the recorded sound waves"

which is the expression that appears in claim 4 of the patent. Of this definition he said (A. F. W., 14):

> "We respectfully solicit a careful consideration of the new claims 11 to 16 inclusive, which have been redrawn, following somewhat the form of new claims 1 and 2, to define a tympanum of such area as to produce directly regenerated sound waves substantially corresponding in intensity and amplitude to the recorded sound waves. That is to say, a tympanum adapted to regenerate by its own movements when vibrated by the record, the original sounds, without the interposition of any horn or other confining transformer."

And he argued that such a direct acting tympanum had long been sought for (as was evidenced by the flat sounding board patents to which the examiner had referred); that these prior art devices had not solved the problem; that the applicant had succeeded where others had failed, and that under these circumstances the examiner's idea that the change did not require invention is overcome by the historical facts. And he said (A. F. W., 15):

> "We believe that it will now be apparent to the Examiner that the selection of the particular dimensions is of the essence of the invention and attains novel results arising from the particular dimensions and such as could not be obtained by the devices shown in the references."

With that position taken by the patentee during the prosecution of his application, plaintiff, his successor in interest, is now wholly in accord. There is no doubt that size is of the essence of Hopkins' invention, in its differentiation from the sound box horn devices of the prior art. Nor does there seem to be any doubt that the particular dimensions set forth by Hopkins are essential to the character of faithful reproduction over the whole sound spectrum that the art demands. It seems to us there could be no greater assurance of the intelligence and importance of Mr. Hopkins' experimental work, of the value of his specific disclosure, and of the really remarkable character of his simple mechanical combination, than the fact that defendant selects the very size of cone that Hopkins indicated to be necessary, achieving reduction of the nine-inch over-all diameter of the tympanum only by reducing the width of the rim and compensating for that by choosing a more flexible material.

Defendant did this after the Hopkins patent had repeatedly been held valid and had been held to be infringed by the substantially identical Brandes loud speaker. And that choice was made in preference to adopting such competitive devices as had been held not to infringe by a Circuit Court of Appeals (Western Electric double cone) or by a District Court (Crosley type).

It might very well be asked: What leads defendant to manufacture this particular single cone type of loudspeaker, in these modern days of ample power and excellent sound reproduction, except the latent virtue of that simple combination? And what leads defendant to choose that particular size of cone except the accuracy of Hopkins' experimental observation that sounds will not be reproduced in balanced volume over the whole range of frequencies if the cone is reduced below the size he indicated?

In the third office action on the Hopkins application, the examiner expressing doubt that the Hopkins structure would "by itself" produce sound waves corresponding in intensity to the recorded sound waves, again rejected the claims on the ground that Hopkins had made no invention over Lumiere's large diaphragm in view of the small conical diaphragm of the sound box horn combination patents (A. F. W., 16-17).

Responding to that repeated rejection, the applicant inserted in some of the claims the words of negative limitation—"without an amplifying horn or chamber".* Discussing the amended claims, the applicant's solicitors said that the purpose of the amendment (A. F. W., 18)—

> "is consistent with the purpose which we have continually followed, that is, to distinguish the present machine from the ordinary machine in which the regenerator comprises a reproducer and a trumpet. In the opening part of the specification, we tried to make it clear that in ordinary machines, the reproducer, or sound box, is incapable of generating sound waves of such a character as will persist in the air to any substantial extent. The character of the sound made by an ordinary phonograph sound box disconnected from the amplifying horn or chamber, is well known to the Examiner, and is, of course, easily distinguished in his mind from the sound produced by the sound box acting together with the amplifying horn or chamber. It has been demonstrated to the Examiner that the applicant's machine, without any amplifying horn or chamber, will produce a volume of sound which corresponds to the sound produced by the conjoint action of the sound box and amplifying chamber in an ordinary phonograph. In other words, the applicant's ma-

*These words were subsequently erased as unnecessary (A. F. W., 24).

chine does, with its large diaphragm, what the old machines do with the combined diaphragm and amplifying horn or chamber, and in so doing the applicant's machine overcomes the limitations which necessarily reside in the use of a horn or chamber. This accomplishment is a perfectly definite thing which anyone can understand, which has often been tried before, and which is done by the applicant for the first time. We have done everything we possibly could do to define this distinction in the claims, and it seems to us that they do define it. The additional words inserted in the claims have not been inserted with the intent or purpose of changing their scope, nor is it intended that they shall in any way result in prolonging the prosecution of the case. They are merely an earnest of our purpose to distinguish definitely from the old machines in which an amplifying horn or chamber is used."

This statement of purpose was followed by a repetition of the argument that applicant's invention is not anticipated by Lumiere, or by the sound-box horn combination patents, or by any permissible adding together of the disclosure of those references.

In the fourth office action the examiner again rejected the claims, but this time on the ground that the definition of size was too indefinite, saying (A. F. W., 20):

"The specification of the size according to results is believed to be too indefinite. The examiner understands that the base diameter and the altitude must have a definite relative proportion, and that the base diameter must be *substantially* nine inches in order that satisfactory results can be obtained. * * * The statement in some of the claims that the diameter exceeds nine inches is not believed to be sufficiently definite." (Emphasis ours.)

In the fourth amendment (A. F. W., 21) the words "of large area rigidly supported at its periphery and freely exposed to unconfined air" were inserted in claims 1 and 2. In claims 11 and 12 (claims 7 and 8 of patent 1,271,527) the words "of large area" were inserted after the word "tympanum." * Only claims 14 and 15 (claims 10 and 11 of patent 1,271,527) were amended to define the area as "exceding nine inches in diameter." At the same time some of the claims were amended to specify a rigid support for the outer edge of the tympanum (cone plus rim).**

In the argument accompanying that amendment, language was used that shows, it seems to us, the wisdom of the rule that things said in argument do not give rise to estoppel. The *act* of applicant's solicitor at that time was an insistence upon claims not limited in terms to an over-all diameter of tympanum (cone plus rim) of nine inches. Nevertheless in argument, the solicitor's *words* were (A. F. W., 21):

> "It is essential to the success of applicant's machine that the tympanum be of large area and that the base of the *vibratile portion thereof* exceed nine inches in diameter, and furthermore that the peripheral edge of the tympanum, *exterior of the vibratile portion,* be rigidly secured * * *."

And:

> "Applicant has demonstrated that his invention is not wholly satisfactory when the conical tym-

*These words were erroneously printed as "of long area" in the patent and were corrected by certificate of correction (Pat. 1,271,527, p. 8).

**That was done because the examiner had called the applicant's attention orally to prior art patents showing horns or other amplifying devices made of paper or the like, but without any rigid support or interposed flexible rim (A. F. W., 23-24).

panum is made with a *basal diameter* of less than nine inches." (Emphasis ours.)

The fact is that it is not, and never was, anywhere suggested in the specification of the patent that the basal diameter of the conical portion of the tympanum should exceed nine inches. The reference in the patent is to the over-all diameter of the tympanum, including the conical "vibratile portion thereof" plus the rim "exterior of the vibratile portion."* As to the basal diameter of the conical portion, the patent says that it should exceed in area one-half of the effective area of the entire tympanum, which entire tympanum is to have a diameter of nine inches.

Would anyone suggest that this hasty and erroneous statement twice made by applicant's attorney in this argument could have the effect to arbitrarily limit the scope of the monopoly?

Is it not a reasonable interpretation of the positively erroneous language thus used in argument, that the solicitor meant only to say what the specification says; what the solicitor had earlier said in argument, and what the examiner had said he understood to be a fact; that the cone plus the rim must be **substantially** nine inches in diameter to produce the desired result.

If defendant by the same combination of three mechanical elements had succeeded in producing the same result with a tympanum slightly less than nine inches in diameter having a conical portion slightly less than one-half the area of a nine-inch tympanum, it would even then seem to us that the Court would find infringement on the ground that defendant had adopted the principle of the Hopkins invention, sacrificing some of the desir-

---

*See discussion by Campbell, D. J., in the *Sylo case* (Pamphlet, p. 6).

able character of reproduction, but nevertheless making substantial use of the patented subject-matter.*

But where, as here, defendant carefully preserves the specified area of the conical sound-producing portion of the tympanum, and effects only a colorable diminution of the over-all diameter by substituting a narrower rim of more flexible material for a wider rim of less flexible material, it seems to us that the diminution in size is too apparent a subterfuge to deceive a tribunal that judges rights on the basis of substance and fair dealing.

That the applicant's solicitor was consistently and deliberately insisting on claims not limited, even in terms, to an over-all diameter of nine inches is shown by the statement in this argument (A. F. W., 23) that

> "* * * and in **some** of the claims, the lower limit of the diameter of the vibratile portion of the tympanum is set forth." (Emphasis ours.)

In this final argument, the applicant insisted (A. F. W., 22) that the expression—

> "the vibratile conical tympanum is of large area rigidly supported at its periphery and freely exposed to unconfined air, so that when the tympanum is vibrated, it imparts to the surrounding free air, sound waves corresponding in intensity to the recorded sound waves"

was sufficiently definite to differentiate Hopkins' direct-acting loudspeaker from the sound-box and horn devices. Thereupon the examiner yielded and allowed the claims abandoning the idea that no invention was involved and also the objection that the chosen language of the claims was indefinite.

---

*Sewall vs. *Jones*, 91 U. S., 171, 183-184; *Winans* vs. *Denmead*, 15 How., 330, 344.

After this final argument was filed and immediately before allowance, the applicant divided out of the parent application the claims covering the acoustic device *per se*, and incorporated them in the divisional application which resulted in the patent in suit.

As originally filed, the divisional application contained thirteen claims of which claims 1 to 7 correspond to claims 1 to 7 of the patent. Claims 8 to 11 and 13 were limited to a particular material for the tympanum, and claim 12 defined the size by the words (A. F. W., 25):

> "said conical portion being of sufficient area to impart to the surrounding free air, when vibrated, sound waves substantially corresponding in intensity to the original shocks or vibrations."

The claims limited to a particular tympanum material were subsequently canceled and claim 12 was replaced by claim 8 of the patent (A. F. W., 25).

There was in the history of this divisional application no further discussion of the claim language which had already been accepted by the Examiner.

In this insistence upon the patentability of his large-area, direct-acting sounding-board combination over the old sound-box and horn combination patents, and search for and finding of an appropriate definition of size, there is no confirmation of defendant's interpretation of the patent disclosure which seeks to limit it to a tympanum made of one piece of strong, crisp material throughout; or of any absolute limitation to a nine-inch over-all dimension without any range of equivalents. **It could only have been in contemplation of possible equivalents that applicant insisted upon, and the examiner allowed, the claims of broader phraseology.**

We do not particularly contest defendant's suggestion that both forms of claim phraseology were intended to define the size and proportions disclosed in the speci-

fication.* But it seems plain to us that the mere struggle for allowance of two forms of expression in the claims is confirmatory of our own interpretation of the specification—that it permits some latitude of equivalents, certainly including defendant's compensated change in the form of the rim which preserves both the specified size of the cone and the desirable flexibility of the rim. In the specification it is expressly said that some departure from the approximate sizes given is permissible (Pat., p. 2, lines 97, et seq.).

The Proper Test of Infringement.

We concede that correspondence with the letter of the claims does not settle conclusively the question of infringement; that a charge of infringement is sometimes made out though the letter of the claims be avoided, and that the converse is equally true.[1] The true inquiry is: What mode of operation is introduced and employed, and what result is attained by the structure or device illustrated and described as the preferred embodiment of the invention[2], and whether defendant's combination of elements performs substantially the same function in substantially the same way to obtain the same result?[3] If the answer to this inquiry is in the affirmative, infringement will be found unless the patentee has so manifested an intention to disclaim part of his true invention as to exclude defendant's structure.[4]

---

*If claims 4 and 8 were not in the patent, we should nevertheless confidently expect this Court to find infringement of the other claims, which are limited in terms to the nine inch over-all diameter; since there is not anything in the true nature of the Hopkins invention, or in the prior art, to exclude the obviously equivalent structure adopted by defendant.

[1]*Westinghouse* vs. *Boyden*, 170 U. S., 537, at page 568.

[2]*Winans* vs. *Denmead*, 15 How., 330, at pages 338-339.

[3]*Machine Co.* vs. *Murphy*, 97 U. S., 120, at page 125.

[4]*Winans* vs. *Denmead*, supra.

The answer to the inquiry as to the true mode of operation and result of the patented invention, in the instant case, is as we have stated it (*ante*, pp. 14-17). The large light paper cone, because of its little inertia accompanied by stiffness, is capable of responding to the high frequency sound vibrations and of imparting them to a large body of air. That capacity is preserved, and at the same time the deformation of the cone is prevented, by the flexible rim. The rigid frame affords a mechanical support and protection for the entire structure, and by the interposition of the flexible rim is prevented from inhibiting the bodily sound-producing motion of the cone. The result is an efficient direct-acting loudspeaker. We think that it is impossible to deny that defendant's combination of elements performs substantially the same function in substantially the same way to obtain the same result.

Indeed, we think that conclusion, which was in fact accepted by the Court of Appeals of the Ninth Circuit (footnote ante, p. 20), is explicitly stated even in the testimony of defendant's own expert, who said (Tr., 52):

> "As to the structural differences and the differences in operation and effect as between the defendant's device and the device shown in the Hopkins patent in suit—both devices generate the sound at the apex of the cone, and in substantially the same manner.† * * * In the Hopkins construction he makes the periphery flat to form an annular rim and clamps it to a rigid frame of large mass. In our construction we interpose a flexible yielding and resistive membrane of kid leather between the edge of the cone and the supporting rim."

---

†Here defendant's expert testified that in his replica of the Hopkins construction (Deft.'s Ex. 17) blasting and rattling occurred. But in rebuttal (Tr., 91-92) it was shown that the rattling in that exhibit was due to the striking of an unbalanced armature against the magnet pole pieces and was not the blasting effect of the edge of the cone.

(Tr., 53:)

> "When sound vibrations reach that flexible kid membrane, the softness and yielding qualities of it cause it to absorb a great proportion of that sound, and cause it to absorb and prevent the bulk of that rattling."

And (Tr., 65-66):

> Q. "Why don't you support your cone by a rigid frame clamped directly to the edge of the cone, instead of having this interposed flexible rim?
> A. To enable the cone to vibrate freely and move freely.
> Q. That is, if the edge of the cone was supported to a rigid structure it could not vibrate freely, and could not produce sound freely; is that true?
> A. It could produce sound at certain frequencies.
> Q. But not low?
> A. But not the lower frequencies."

The Decision and the Opinion of the Court of Appeals in the Instant Case.

Neither the position of the defendant in the Court below, nor the decision in that Court, rested upon this mere diminution of the over-all diameter of the tympanum by a narrowing of the rim.

Both went beyond that to the conclusions that the patent must be limited to a rim which is an integral peripheral extension of the paper cone.

Defendant in its brief below took the position (brief, p. 36) that the patent

> "* * * while valid when narrowly construed, must be limited to a tympanum characterized by a matter

> of size exceeding nine inches in diameter, *and* the use of a material throughout which is to be crisp and strong and possessing considerable rigidity.
>
> This applies not only to the conical portion but to the so-called plane peripheral portion which makes up a substantial part of the sounding-board of the Hopkins device." (Emphasis ours.)

And (brief, p. 46):

> "The patent discloses a unitary, integral tympanum, and only such a tympanum. It comprises two portions, the cone and the rim, but the teaching of the patent is that the two portions shall be formed of a single piece, and that the whole shall be of crisp vibratile material."

The Court of Appeals, as we have seen, rested its narrow interpretation of the patent upon a consideration of the prior art; holding that defendant's flexible non-resonant rim or annulus is not the equivalent of the flat rim or plane annulus of Hopkins' tympanum, and that the patentee's claims are void for lack of invention unless the claims are limited to exclude "the smaller device of appellee, *with its limp leather annulus.*" (Emphasis ours.)

We think it would serve no useful purpose for us to discuss in detail the wandering opinion, written by Wilbur, C. J., in which this conclusion is expressed. Nowhere in it is Hopkins' simple mechanical three-element combination appreciated. The true mode of operation and quality of result is found, as matter of fact (Tr., 114-115 and 118), but is not used as a measure of scope; being erroneously put aside on the ground that functional elements of the total result were separately present in earlier structures,* and upon the unreasonable

---

*Temco, etc., Co. vs. Apco, etc., Co., 275 U. S., 319, 325-6.

idea that infringement of a mechanical combination patent depends upon whether the patentee did or did not mention all of its advantages. It violates reality by disregarding the fact that an invention, like life itself, is "to be viewed eventually as a whole, not analyzed to parts, but each part having reference to all." It repeatedly disparages the invented combination on the ground that "practically every element in the Hopkins patent was known to the prior art" (Tr., 127).* It does even worse than that, repeatedly suggesting that prior art devices, because they produce partial results which are only functional elements of Hopkins' total result, are anticipatory; as though results were patentable, as distinguished from structure.* It erroneously distinguishes defendant's device from the patented device on the ground that "The Rola cone * * * is too small" (Tr., 117-118) "* * * using a smaller cone than Hopkins thought possible" (Tr., 128), although the Rola cone is in fact larger than the minimum specified by Hopkins.** It is over-solicitous as to the right of the public to use devices of the prior art; whereas plaintiff could have, and has, no complaint to make about that, complaining only of the use of the patented combination. It distorts the rule that "That which infringes if later would anticipate if earlier" into the untenable idea that patents which, if still unexpired, might be infringed by an improved combination are anticipatory thereof. It distorts the rule that accidental and unappreciated use does not anticipate into the erroneous thought that a patentee must mention all of the advantages that inhere in his disclosed structure. It erroneously suggests that subse-

---

Temco, etc., Co. vs. *Apco, etc., Co.*, 275 U. S., 319, 326.

**See Hazeltine's correction of the erroneous notions of defendant's counsel on this subject (Tr., bottom p. 33 and p. 34), and Farrand's repetition of the same correction (Tr., 106). It seems to us discouraging to the point of hopelessness that error should appear on this fact which can be determined merely by looking at defendant's cone.

quent improvements (the baffle, Tr., 128*) added to the patented structure avoid infringement.** And after saying that the Appellate Court "must rely upon the judgment of the Trial Court as to what was demonstrated before it" (Tr., 131), the opinion repeatedly makes assertions about demonstrations which the Trial Court in its opinion completely ignored (Tr., 13-20) after warning counsel for both sides (Tr., 46 and Tr., 94) that it would ignore such demonstrations if, upon consideration, they seemed immaterial.

The Fundamental Error.

But, laying all that aside, the disagreement between the decision of the Court of Appeals in the instant case and the decision of the Court of Appeals of the Third Circuit is, after all, a result of a different viewpoint as to the range of equivalents to which the patent is entitled, deduced from a different viewpoint as to the standing of Hopkins' invention in the art.

If we think of the art of sound reproducing devices generally, it is a crowded art, and Hopkins' patent stands in it as one which deflected the public demand and the responsive industrial production of sound reproducing devices from the sound box and horn combination to direct-acting loud speakers of the cone type.

If we think of the art, more specifically, as the art of cone type loud speakers, Hopkins' patent stands in it as the step that made the scientifically correct Starling & Cole idea a practical commercial reality by adding to their direct-acting cone a rigid supporting frame coupled to the cone by a flexible rim.

---

*And see defendant's witness Danielson (Tr., 71-72) and plaintiff's expert, Hazeltine (Tr., 94).

**_Temco, etc., Co._ vs. _Apco, etc., Co._, 275 U. S., 319, 328.

The Court of Appeals in the instant case never reached any appreciation of this reality. It fell into the error corrected by this Court in the *Paper Bag case.** Having found the Hopkins invention of less than pioneer character the Court of Appeals erroneously proceeded to restrict it to that form which the patentee describes as the best mode of applying the principle of his invention without appreciating the true nature of the Hopkins invention, or making any adequate comparison of that with defendant's structure.

There has always been a tendency to simplify questions of patent infringement by dividing all patents into two classes (1) those for primary inventions or so-called "pioneer" inventions and (2) those for improvement inventions in a crowded art; and to confine the application of the doctrine of equivalents to the first class.

This procedure found some support in the early decisions of this Court and some of the lower courts proceeded to carry it too far. For instance, the lower courts followed the decision in *Miller* vs. *Eagle*, 151 U. S., 134, until things got to a point where patent lawyers urged, as matter of law, that patents could be divided into these two arbitrary classes and that the doctrine of equivalents is applicable only to the first class.

This substituted terminology for reality. It sought to divide into two sharply defined classes inventions which in reality have an infinite variety of individuality, in some degree "pioneer" and in some degree "improvement," and which differ from one another by infinite gradations all the way from the really pioneer inventions that create a new art, like Morse's telegraph, Bell's telephone and Marconi's wireless telegraphy, to the last step inventions that merely smooth out the path and renew arrested progress.

**Continental, etc., Co.* vs. *Eastern*, 202 U. S., 405, 415.

As this facile and correspondingly attractive idea was increasingly applied to practical cases, its error became more and more apparent; as it always does become finally apparent that the mere tagging of a thing with an arbitrary name satisfies only the superficial mind. The growing error was corrected by this Court in the *Paper Bag case* where the Court said (210 U. S., 415):

> "It is manifest, therefore, that it was not meant to decide that only pioneer patents are entitled to invoke the doctrine of equivalents, but that it was decided that the range of equivalents depends upon and varies with the degree of invention."

Since that time, and because it is always easier to accept broad generalities than actually to analyze a particular example, there has always been, and it begins to look as though there would always be, a tendency for the lower courts to return to the old doctrine. That tendency has, however, always been met by the logic and by the authority of the *Paper Bag case,* as has quite recently been evidenced by the practical application of the correct rule in *Temco, etc., Co.* vs. *Apco, etc., Co.,* 275 U. S., 319.*

The error of the old idea is quite beautifully illustrated in the case at bar where the Court of Appeals, after holding (Tr., 131) that a non-resilient flexible connection of the cone to a metal frame was anticipated in the sound-box horn combination patents, which also disclose a cone connected to a metal frame by a plane peripheral extension of the cone, nevertheless went on to save the patent from invalidity by restricting it to a plane peripheral rim. How the narrowing of the scope of the combination patent to a particular form of one element which was already old in that form increases the inventive concept involved, the opinion does not say.

---

*And see *Eibel Co.* vs. *Paper Co.,* 261 U. S., 45, at page 63.

CONCLUSION.

We respectfully submit, therefore, that the decision of the Court of Appeals for the Third Circuit in the Brandes case was right, and that the decision of the Court of Appeals in the instant case is wrong and should be reversed.

Respectfully submitted,

WILLIAM H. DAVIS,
of Counsel.

FILE COPY

OCT 6

Abbreviated File Wrapper History Including All That Pertains to the Subject Matter in Issue.

(Cited as "A. F. W.")

Supreme Court of the United States

OCTOBER TERM, 1930.

No. 19.

LEKTOPHONE CORPORATION, *Petitioner,*

vs.

THE ROLA COMPANY.

OCTOBER TERM, 1930.

No. 68.

MILLER BROTHERS COMPANY, *Petitioner,*

vs.

LEKTOPHONE CORPORATION.

ON WRITS OF CERTIORARI TO THE UNITED STATES CIRCUIT COURTS OF APPEALS FOR THE NINTH CIRCUIT AND FOR THE THIRD CIRCUIT.

GALLO & ACKERMAN, Inc., 142 Liberty Street, 'Phones—Hitchcock 3078-9.

Abbreviated File Wrapper History Including All That Pertains to the Subject Matter in Issue.

Paper No. 1.

Original claims 15 to 20, inclusive, of the parent application (which eventuated in patent No. 1,271,527), were directed to the tympanum *per se,* and were as follows (Miller Record, p. 343)*

"15—**14**—A sound regenerator for directly propagating self-sustaining sound waves in air, consisting of a ponderous support having a circular aperture, a light vibratile tympanum having its outer edge mounted on said support, said tympanum being shaped to provide an annular plane adjacent said support and a conical portion springing from the inner edge of said annular plane, and a cap of non-vibratile material rigidly secured to the apex of said conical portion of said tympanum; substantially as described.

16—**15**—A sound regenerator for directly propagating self-sustaining sound waves in air consisting of a ponderous support having a circular aperture, a light tympanum mounted upon said support in said aperture, said tympanum having a central conical portion the base of which exceeds in area one-half the effective area of said tympanum; substantially as described.

17—**16**—A sound regenerator for directly propagating self-sustaining sound waves in air, consisting of a pon-

*All references to the transcript herein are to the Transcript of Record in *Miller Brothers Co.* vs. *Lektophone Corporation,* No. 68. That record was used for the present purpose because the Patent Office file wrappers contained therein are photographic copies and are easier to follow than the file wrappers in the record of the *Rola case.*

derous support having a circular aperture, a light vibratile tympanum exceeding nine inches in diameter having its outer edge mounted on said support, said tympanum being shaped to provide an annular plane adjacent said support and a conical portion springing from the inner edge of said annular plane, and a cap of non-vibratile material rigidly secured to the apex of said conical portion of said tympanum; substantially as described.

18—**17**—A sound regenerator for directly propagating self-sustaining sound waves in air consisting of a ponderous support having a circular aperture, a light vibratile tympanum mounted in said aperture and having its outer edge secured upon said support, said tympanum being shaped to provide an annular plane adjacent said support and a conical portion springing from the inner edge of said annular plane, the diameter of the base of said conical portion being substantially eight-tenths of the diameter of the said circular aperture in said support, and a cap of non-vibratile material rigidly secured to the apex of said conical portion of said tympanum; substantially as described.

19—**18**—A sound regenerator for directly propagating self-sustaining sound waves in air consisting of a ponderous support having a circular aperture, a light vibratile tympanum mounted in said aperture and having its outer edge secured to said support, said tympanum being shaped to provide an annular plane adjacent said support and a conical portion springing from the inner edge of said annular plane, the altitude of said conical portion being substantially one-quarter of the diameter of its base, and a cap of non-vibratile material rigidly secured to the apex of said conical portion of said tympanum; substantially as described.

20—**19**—A sound regenerator for directly propagating self-sustaining sound waves in air consisting of a pon-

derous support having a circular aperture exceeding nine inches in diameter, a light vibratile tympanum mounted in said aperture and having its outer edge secured to said support, said tympanum being shaped to provide an annular plane adjacent said support and a conical portion springing from the inner edge of said annular plane, the diameter of the base of said conical portion being substantially eight-tenths of the diameter of the said circular aperture in said support and the altitude of said conical portion being substantially one-quarter of the diameter of its base, and a cap of non-vibratile material rigidly secured to the apex of said conical portion of said tympanum; substantially as described."

Paper No. 2.

In the first office action, dated September 9, 1913 (Tr., 350), the examiner rejected these claims saying (p. 350):

> "What does applicant mean by 'self-sustaining sound waves?' "

and (Tr., 351-352):

"Claim 15 is rejected on Kraemer, June 9, 1908, 890,-142 (181-11).

Claim 16 is rejected on Kraemer; English, June 10, 1913, 1,064,062 (181-11); Edison, Feb. 22, 1910, 950,226 (181-10); Stroh, English patent, Feb. 16, 1901, 3,393 (181-10); Brown, English patent, Jan. 16, 1911, 1,157 (181-11) or Gaumont & Co. French patent, April 15, 1903, 331,226 (181-10).

Claim 17 is rejected on Kraemer. The size of the diaphragm is not a patentable limitation.

Claim 18 is rejected as not sufficiently distinguished from Kraemer.

Claims 19 and 20 are rejected on Gaumont in view of Kraemer. Note the dimensions of the diaphragm in figure 2 of Gaumont. No invention is found in providing Gaumont's device with a contact piece as at 16 in Kramer."

Paper No. 3.

In the first amendment dated, December 5, 1913 (Tr., 353), occurs the following discussion pertinent to the subject matter of claims 15 to 20 (Tr., 355-357):

"With reference as to what is meant on page 1 by 'self sustaining sound waves', and by 'high tension disturbances', it is pointed out that in ordinary phonographs or talking machines, a small diaphragm is mounted in a sound box containing a very small amount of confined air, and all of the energy of the record is projected against this small diaphragm, which is thus violently vibrated, thereby producing air disturbances of so high a tension, that these disturbances cannot, owing to the inertia of air, effect a movement of a sufficient volume of air to produce sound waves, which, after their production, will be self sustaining so as to carry to a considerable distance and produce sounds which correspond in character, timbre, volume and pitch to the original sounds which made the record, and which, therefore, are the original sounds regenerated.

Inasmuch as these high tension disturbances, which are produced by the small diaphragm in the confined air space of the sound box, cannot, owing to the inertia of air, produce sound waves of large area and of sufficiently low tension suitable for the sound conductivity of air, such sound waves will not be produced as correspond to the sounds which made the record. On the contrary, these high tension disturbances produced by the diaphragm will be squeaky, will have relatively high pitch, and will not be self sustaining so as to carry to any appreciable distance. It is for this reason that the horn or trumpet is employed to effect a lateral control of these high tension disturbances, resist their transformation into heat and convert them into waves of sufficiently low tension and large volume to enable them to overcome the inertia of the air and thereby become self-sustained.

But the use of the horn or trumpet amplifies the distortions produced by the small diaphragm being so violently agitated, and introduces distortions due to vibrations set up in the horn itself. The resultant sound waves are not true reproductions of the original sounds, but are the characteristic sounds known as 'phonograph sounds.'

In order to obtain faithful reproduction of the original sound waves, that is, to really regenerate the original sounds, applicant has provided a sound regenerating machine which dispenses with the employment of a horn or trumpet for transforming high tension disturbances into waves of lower tension, and in which the vibration of the stylus by the record are mechanically directly transmitted to a diaphragm which is free to vibrate in unconfined air, which has sufficient area to set in motion a large volume of air, which is sufficiently light and rigid to enable it to move in synchronism with the stylus, and the distance of vibration of which is sufficiently short to permit of a relatively slow movement appropriate for the sound conductivity of air, whereby the regenerated sounds will be self sustaining and will be accurate reproductions of the original sounds.

Applicant has thus produced a machine in which the sounds are regenerated directly from the record and in open and unconfined air, without the intervention of a sound box and its confined body of air, and without the intervention of any vibration transforming device, such as a horn or trumpet.

So far as applicant is aware the machine of this invention is the first which has ever been constructed which will accurately regenerate the original sounds without distortion, without squeaking, without accentuation of notes of certain pitch, without change in intonation and without any appreciable loss of energy, and which in fact will produce faithful reproductions of the original sounds.

With reference to the statement in lines 7 and 8 of page 8 that no wave motions are set up in the material of the cone portion of the diaphragm, it will be noted that the lower end of the rod V is rigidly secured to the cap M which is secured to the apex of the cone L. The vibrations which are imparted to the cone L through the rod V are mechanical movements which are transmitted directly from the stylus by the levers Q and R and the rods S and S'. The cone L is therefore moved bodily to and fro and is not molecularly vibrated, the diaphragm not being under tension, as are the transmission rods just referred to. The examiner, of course, understands that the sides of a cone being straight, will not yield when a blow strikes the apex of the cone in the direction of the axis thereof. If the diaphragm were flat where it is connected to the rod V, there would be a local vibration set up in the immediate vicinity of the connecting rod, but a large part of the diaphragm would not be bodily moved, as is the case with the cone, and the resultant sounds would be very feeble, and would not compare in volume to the sounds which are produced by the cone of the applicant's machine. Applicant has demonstrated this practically by employing both flat and conical diaphragms".

(Tr., 360-361).

"Each of the claims 15 to 20, inclusive, is drawn to the combination of elements therein set forth as combined in a sound regenerator for *directly propagating self sustaining* sound waves in air. Each of the devices of the references is an ordinary reproducer having a small diaphragm operating in a sound box having a small volume of confined air, and requiring, in order to set up self sustaining waves, the intervention of a transforming device, such as a horn or trumpet, to change the high tension vibrations into lower tension waves of greater amplitude. No one of the diaphragms described

and illustrated in the said references can be employed to directly propagate and regenerate the original sounds, but, the sounds produced therewith will be of high pitch and of so great a tension that the disturbances will not set up self sustaining waves in the air, for the reasons hereinbefore given.

For these reasons the references cited against claims 15 to 20, inclusive, do not meet the claims. With reference to claim 17 which specifies a tympanum exceeding 9 inches in diameter, it is submitted that the size of the tympanum is what enables it to effect direct regeneration of the sound. When a horn is employed for transforming high tension disturbances, the size of the tympanum is immaterial. Applicant has practically demonstrated that, to effect direct regeneration from the record of the sounds, a light, vibratile tympanum of substantially 9 inches in diameter or greater must be employed in order to obtain faithful reproductions".

(Tr., 362).

"The dimensions of the diaphragm and of the conical portion thereof, as set forth in claims 15 to 20, inclusive, are essential elements in a direct sound regenerator, but they are not essential in sound boxes which employ horns or trumpets as do all of the references which have been cited against these claims. This has been demonstrated by the applicant by actual trial.

For the foregoing reasons it is submitted that claims 15 to 20, inclusive, are not met by the references."

In this amendment the following claims 39, 40 and 41 were added (Tr., 365-366):

"39—**29**—*25*—In a sound regenerating machine, a tympanum having a free area exceeding nine inches in diameter and having a portion substantially eight-tenths of

the diameter of said free area which is rigid in the direction of the axis of the tympanum.

40—**30**—*26*—In a sound regenerating machine, a tympanum having a free area exceeding nine inches in diameter and having a conical portion substantially eight-tenths of the diameter of said free area.

41—**31**—*27*—In a sound regenerating machine, a tympanum having a free area exceeding nine inches in diameter and having a conical portion substantially eight-tenths of the diameter of said free area, the altitude of said conical portion being substantially one-quarter of the diameter of its base".

And also claim 57 (Tr., 368):

"57. In a sound regenerating machine, a tympanum having a conical vibratory portion adapted to be vibrated from a record, the tympanum having a vibratile area of sufficient size to effect, without amplification, the regeneration from the record of sound waves of relatively large volume and carrying power."

The amendment contains a discussion of these claims as follows (Tr., 374):

"Claims 39, 40, 41, 57, 61 and 65 distinguish from the references in the conical tympanum having a vibratile area of sufficient size to effect, without amplification, the regeneration from the record of sound waves of large volume and carrying power. Each of the references having a conical diaphragm, is of the sound box type having a small tympanum with a range of vibrations greater than that of the stylus and which requires a sound box and horn to transform the high tension disturbances produced into waves to which the air can respond."

By this amendment claims 15 to 20 were renumbered as **14** to **19** respectively SO THAT THE CLAIMS NOW IN INTEREST AT THIS POINT ARE NUMBERED **14, 15, 16, 17, 18, 19,** 39, 40, 41 and 57.

Paper No. 4.

In the second office action, dated February 7, 1914 (Tr., 377), the examiner rejected these claims saying (Tr., 378-379):

"Claim **14** is rejected as no invention is found in interposing any of the common non-vibratile members employed in this art between the diaphragm and stylus bar as in

Kraemer,	885,490,	Apr. 21, 1908,	(181-11),
Montgomery,	652,800,	July 3, 1900,	" "
Hill,	668,183,	Feb. 19, 1901,	(181-10), or
Berliner,	534,543,	" " 1895,	(181-3)

between the diaphragm and stylus bar of any such structures as in Gaumont, English, Edison, Browne, or Stroh, all of record.

Claim **15** is rejected on the references and for the reasons of record.

Claim **16** is rejected on the references and reasons of rejection of claim 14. The size of the diaphragm is held not a patentable limitation. Note, however, that Lumiere discloses a diaphragm exceeding nine inches in diameter.

Claims **17, 18** and **19** are rejected upon Gaumont of record, in connection with the considerations above given".

(Tr., 380).

"Claims 39, 40 and 41 are rejected on Gaumont or English, 1,064,062, in view of Lumiere, the selection of the particular dimensions being held not a matter of

invention in the absence of a showing of novel results arising from the particular dimensions and such as could not be obtained by the ratio of dimensions of the references. * * *

Claim 57 is rejected on Lumiere; also on any conical diaphragm cited in view of Lumiere."

Paper No. 5.

In the second amendment, dated February 5, 1915 (Tr., 382), the following claims were added (Tr., 383):

"1. In a machine for directly regenerating sound from a record of the same, a vibratile conical tympanum, and a mechanical transmission through which the vibrations produced by the record are transmitted to the tympanum, the tympanum being of sufficient area to impart to the surrounding free air, when the tympanum is so vibrated, sound waves substantially corresponding in intensity to the recorded sound waves; substantially as described.

2. In a machine for directly regenerating sound from a record of the same, a vibratile conical tympanum, a mechanical transmission through which the vibrations produced by the record are transmitted to the tympanum. the tympanum being of sufficient area to impart to the surrounding free air, when the tympanum is so vibrated, sound waves substantially corresponding in intensity to the recorded sound waves, and an open-work cabinet enclosing the tympanum but affording substantially free access of the surrounding air thereto; substantially as described."

Claims **14** to **19**, inclusive, were replaced by the following claims (Tr., 384-387):

"11—*7*—In a machine for directly regenerating sound from a record of the same, a tympanum support having a circular aperture, a light vibratile tympanum having

its outer edge mounted in said support, said tympanum being shaped to provide an annular sustaining rim adjacent said support, and a conical portion springing from the inner edge of said annular rim, a cap of non-vibratile material rigidly secured to the apex of said conical portion of said tympanum, and a mechanical transmission through which the vibrations produced by the record are transmitted to the tympanum, the tympanum being of sufficient area to impart to the surrounding free air, when the tympanum is so vibrated, sound waves substantially corresponding in intensity to the recorded sound waves; substantially as described.

12—*8*—In a machine for directly regenerating sound from a record of the same, a ponderous tympanum support having a circular aperture, a light tympanum mounted upon said support in said aperture, said tympanum having a central conical portion, the base of which exceeds in area one half the effective area of the said tympanum, and a mechanical transmission through which the vibrations produced by the record are transmitted to the tympanum, the tympanum being of sufficient area to impart to the surrounding free air, when the tympanum is so vibrated, sound waves substantially corresponding in intensity to the recorded sound waves; substantially as described.

13—*9*—In a machine for directly regenerating sound from a record of the same, a ponderous tympanum support having a circular aperture, a light vibratile tympanum exceeding nine inches in diameter, having its outer edge mounted on said support, said tympanum being shaped to provide an annular rim adjacent said support, and a conical portion springing from the inner edge of said annular rim, a cap of non-vibratile material rigidly secured to the apex of said conical portion of said tympanum, and a mechanical transmission through which

the vibrations produced by the record are transmitted to the tympanum, whereby the tympanum imparts to the surrounding free air sound waves substantially corresponding in intensity to the recorded sound waves; substantially as described.

14—*10*—In a machine for directly regenerating sound from a record of the same, a ponderous tympanum support having a circular aperture, a light vibratile tympanum mounted in said aperture and having its outer edge secured upon said support, said tympanum being shaped to provide an annular rim adjacent said support, and a conical portion springing from the inner edge of said annular rim, the diameter of the base of said conical portion being not less than eight-tenths of the diameter of the said circular aperture in said support, a cap of non-vibratile material rigidly secured to the apex of said conical portion of said tympanum, and a mechanical transmission through which the vibrations produced by the record are transmitted to the tympanum, the tympanum being of sufficient area to impart to the surrounding free air, when the tympanum is so vibrated, sound waves substantially corresponding in intensity to the recorded sound waves; substantially as described.

15—*11*—In a machine for directly regenerating sound from a record of the same, a ponderous tympanum support having a circular aperture, a light vibratile tympanum mounted in said aperture, and having its outer edge secured to said support, said tympanum being shaped to provide an annular rim adjacent said support, and a conical portion springing from the inner edge of said annular rim, the altitude of said conical portion being substantially one fourth of the diameter of its base, a cap of non-vibratile material rigidly secured to the apex of said conical portion of said tympanum, and a

mechanical transmission through which the vibrations produced by the record are transmitted to the tympanum, the tympanum being of sufficient area to impart to the surrounding free air, when the tympanum is so vibrated, sound waves substantially corresponding in intensity to the recorded sound waves; substantially as described.

16—*12*—In a machine for directly regenerating sound from a record of the same, a ponderous tympanum support having a circular aperture exceeding nine inches in diameter, a light vibratile tympanum mounted in said aperture, and having its outer edge secured to said support, said tympanum being shaped to provide an annular rim adjacent said support, and a conical portion springing from the inner edge of said annular rim, the diameter of the base of said conical portion being not less than eight-tenths of the diameter of said circular aperture in said support, and the altitude of said conical portion being substantially one quarter of the diameter of its base, a cap of non-vibratile material rigidly secured to the apex of said conical portion of said tympanum, and a mechanical transmission through which the vibrations produced by the record are transmitted to the tympanum, whereby the tympanum imparts to the surrounding free air sound waves substantially corresponding in intensity to the recorded sound waves; substantially as described."

The numerals of claims 39, 40 and 41 were changed to **29, 30** and **31,** and claim 57 was cancelled, SO THAT AT THIS POINT THE CLAIMS IN INTEREST ARE NUMBERED 1, 2, 11, 12, 13, 14, 15, 16, **29, 30** and **31.**

The same amendment contained the following discussion of these claims:

(Tr., 388).

"New claims 1 and 2 will, perhaps, bear upon their faces the distinguishments relied upon, but they will hereinafter be discussed in connection with the redrawn claims numbered 11 to 16".

(Tr., 389, 390 and 391.)

"We respectfully solicit a careful consideration of the new claims 11 to 16, inclusive, which have been redrawn, following somewhat the form of new claims 1 and 2, to define a tympanum of such area as to produce directly regenerated sound waves substantially corresponding in intensity or amplitude to the recorded sound waves. That is to say, a tympanum adapted to regenerate by its own movements when vibrated by the record, the original sounds, without the interposition of any horn or other confining transformer. The Examiner will recognize, we believe, that such a tympanum has long been sought for by those most skilled in the art, and this is evidenced by the patents cited, such as Shanks, Amet and Lumiere. Those patented devices were certainly failures, and, so far as we are aware, no one before the present applicant succeeded in producing such a tympanum. That the applicant has fully succeeded we can prove to the Examiner by demonstration, if he so desires. It is suggested that size is not a patentable limitation, and that in any case Lumiere disclosed a diaphragm more than nine inches in diameter. The fact is that the problem which the applicant endeavored to solve does not exist until the tympanum is made of very large diameter, that is, of diameter large enough to regenerate the original sounds. When work is attempted on such a large diameter it is found that the diaphragm vibrates at different rates and different intensities in different parts, so that it is divided into nodes of great activity, alternating with portions of little or no activity. Lumiere encountered this difficulty and attempted to solve the problem by the

structure disclosed in his patent No. 986,477. We believe it can easily be proved that that attempt was a failure. The Lumiere patent belongs to the Victor Talking Machine Company, but that Company has never put upon the market any machines embodying the invention. However that may be, the applicant's claims are carefully distinguished from Lumiere, which is not cited directly as a reference against them. In our opinion the suggestion that there is no invention in the form of regenerating tympanum devised by the applicant, is entirely refuted by the Lumiere patent. If the small reproducer diaphragms of conical shape were in themselves sufficient to show those skilled in the art that the difficulties encountered by Lumiere could be overcome by adopting the form of tympanum adopted by the applicant, then Lumiere would have adopted that form. The fact is that the applicant has succeeded where others, and those most skilled in the art, have failed, and under those circumstances deductions which might otherwise be drawn from the earlier different, but now suggestive, patented structures, are overcome by the historical fact. We do not believe that the Examiner is justified in rejecting the applicant's tympanum claims unless he can find in the prior art a structure which in itself corresponds to those claims.

With respect to old claims 39, 40 and 41, now numbered **29, 30** and **31,** we ask the Examiner to take into consideration the foregoing remarks. We believe that it will now be apparent to the Examiner that the selection of the particular dimensions is of the essence of the invention and attains novel results arising from the particular dimensions and such as could not be obtained by the devices shown in the references. If the Examiner desires to hear the results, we can arrange to make a demonstration for him here in New York, paying his traveling expenses for that purpose, or perhaps we can

arrange to have one of the machines taken to the Patent Office."

Paper No. 6.

In the third office action, dated February 23, 1915, the examiner again rejected the claims, saying:

(Tr., 392-393).

"It is doubtful to the examiner if a structure as disclosed by applicant will by itself produce sound waves corresponding in intensity to the recorded sound waves, as such requires that the entire energy represented by the recorded waves be transmitted without loss of energy to the diaphragm and that the diaphragm offer substantially no resistance to the movement so transmitted. If applicant insists on claims embodying such a limitation, he should satisfy this office by competent affidavits or by demonstration that such is true.

Claim 1 is rejected on Lumiere, of record, in view of the conical diaphragms of record. As such conical diaphragms are designed to be transversely rigid and operate in producing sound analogously to a piston, there would seem to be no apparent limit within a moderate range on the diameter which could be employed. Therefore, to increase the diameter of any such diaphragm, as in the references cited, to perform an old function where there is no apparent limit to the diameter that may be employed, is not seen to be a display of invention. In re Pein, 201 O. G., 570.

Claim 2 is rejected on the above references and reasons. No invention is seen, further, in enclosing Lumiere, or a similar structure, in a cabinet, especially in view of Miller of record, Fig. 6, or such structures as in

> Eckhardt 903,364, Nov. 10, 1908 (181-3), or
> Zappert, English, 17,827, July 31, 1909 (181-3), 1 sheet".

(Tr., 393-394).

"Claims 11, 13, 14, 15 and 16 are rejected on the grounds of rejection of claim 1. The interposition of the cap of non-vibratile material in Lumiere, or any other type of diaphragm substituted in Lumiere, is not seen to involve invention, in view of the common use of such in the art, for the same purpose as it is employed by applicant.

* * * * * * *

Claims 29, 30 and 31 are rejected on Lumiere, in view of the conical diaphragms of record, for the reasons above given."

Paper No. 7.

In the third amendment, dated February 22, 1916, the following instructions were given for amending claims 1, 2, 11, 12, 13, 14, 15 and 16 (Tr., 395):

"In the second line of claim 1 and the second line of claim 2, after the word 'same' insert:—without an amplifying horn or chamber—and make the same insertion in the second line of claim 11, claim 12, claim 13, claim 14, claim 15 and claim 16."

This amendment contained the following discussion of the claims now in interest (Tr., 395-398):

"In the last Office Action the Examiner expressed doubt whether the structure disclosed by applicant will itself produce sound waves corresponding in intensity to the recorded sound waves 'as such requires that the entire energy represented by the recorded waves be transmitted without loss of energy to the diaphragm and that the diaphragm offers substantial non-resistance to the movement to be transmitted' and called for affidavits or a demonstration. A demonstration of the machine was made to the Principal Examiner and his assistant

last week, and we believe they were satisfied that the machine would produce, without an amplifying horn or chamber, sound waves substantially corresponding in intensity to the original recorded sound waves. Of course, the Assistant Examiner who wrote the last Office Action was mistaken in supposing that there is any necessary relation between the energy represented by the recorded waves and the energy delivered to the air by the diaphragm. Only a minute part of the energy of the recorded waves is gathered in by the recording trumpet and made use of to actuate the recording device. The energy put upon the air by the vibrating diaphragm is not at all the same energy that existed in the recorded waves, but is the energy of the motor which drives the record tablet in the reproducing machine.

We have amended claims 1 and 2 and claims 11 to 16, inclusive, to emphasize the fact that the machine has no horn or amplifying chamber. We do not believe that the Examiner will suggest that this is a negative limitation, and its purpose is consistent with the purpose which we have continually followed, that is, to distinguish the present machine from the ordinary machine in which the regenerator comprises a reproducer and a trumpet. In the opening part of the specification, we tried to make it clear that in ordinary machines, the reproducer, or sound box, is incapable of generating sound waves of such a character as will persist in the air to any substantial extent. The character of the sound made by an ordinary phonograph sound box disconnected from the amplifying horn or chamber, is well known to the Examiner, and is, of course, easily distinguished in his mind from the sound produced by the sound box acting together with the amplifying horn or chamber. It has been demonstrated to the Examiner that the applicant's machine, without any amplifying horn or chamber, will produce a volume of sound which corresponds to the sound pro-

duced by the con-joint action of the sound box and amplifying chamber in an ordinary phonograph. In other words, the applicant's machine does, with its large diaphragm, what the old machines do with the combined diaphragm and amplifying horn or chamber, and in so doing the applicant's machine overcomes the limitations which necessarily reside in the use of a horn or chamber. This accomplishment is a perfectly definite thing which anyone can understand, which has often been tried before, and which is done by the applicant for the first time. We have done everything we possibly could do to define this distinction in the claims, and it seems to us that they do define it. The additional words inserted in the claims have not been inserted with the intent or purpose of changing their scope, nor is it intended that they shall in any way result in prolonging the prosecution of the case. They are merely an earnest of our purpose to distinguish definitely from the old machines in which an amplifying horn or chamber is used.

We hardly know what we can say in regard to that paragraph of the Examiner's letter which suggests that the applicant's accomplishment does not involve invention. As we understand it, the argument is that Lumiere proposed to use a large diaphragm, but not a conical diaphragm; that small conical diaphragms are old in sound boxes, and that consequently there is no invention in using a large conical diaphragm. It seems to us that this proposition need only be stated to refute itself. The fact is that, although small conical diaphragms were old in sound boxes, Lumiere, who is one of the most skilled men in the art, not only did not know that a large conical diaphragm would accomplish his purpose, but was unable to accomplish that purpose at all. The Lumiere patent is owned by the Victor Talking Machine Company and it is well known to those skilled in the art that the suggestions of Lumiere were abortive and never resulted in an operative machine. The applicant's claims clearly

differentiate from the Lumiere patent and that is all that is necessary. On the question of invention the Lumiere patent is pertinent to the present discussion only because it shows that prior to the applicant, the art did not know how to accomplish the applicant's result.

This ground of rejection was applied by the Assistant Examiner to claims 1, 2, 11 to 16 inclusive and **29, 30** and **31,** and we do not believe that the present Examiner will insist upon it with respect to any one of those claims."

Paper No. 8.

In the fourth office action dated March 4, 1916, claims 1, 3, 11 to 16 and **29** to **31** were again rejected as follows (Tr., 405):

"Claims 1, 3, 11 to 16 and **29** to **31** are rejected as indefinite. The specification of the size according to results is believed to be too indefinite. The examiner understands that the base diameter and the altitude must have a definite relative proportion, and that the base diameter must be substantially nine inches in order that satisfactory results can be obtained. To merely specify this size by the result is believed to be too indefinite. The basis of reference which is stated to be the recorded sound waves is believed to be an indefinite reference base, and that such a range would be too great and variable to be readily determined. For instance, a limitation such as from eight to ten inches for the base diameter might be given. The statement in some of the claims that the diameter exceeds nine inches is not believed to be sufficiently definite. If it is immaterial what the size is within a considerable range, then it is a mere question of expediency, or selection of any size one desires for any loudness, and would not involve invention."

Paper No. 9.

In the fourth amendment, claims 1, 2, 11 to 16 inclusive, and **29** to **31** inclusive, were amended as follows (Tr., 407-408):

"Claims 1 and 2, line 3, after 'panum' insert:—of large area rigidly supported at its periphery and freely exposed to unconfined air—.

Claims 11 and 12, line 3, after 'tympanum' insert:—of large area—.

Claim 11, line 4, before 'mounted' insert:—rigidly—.

Claim 12, line 4, before 'mounted' insert:—having its outer edge rigidly—.

Claims 13, line 5, before 'mounted' insert:—rigidly—.

Claim 14, line 3, after 'aperture' insert:—exceeding nine inches in diameter—. Line 4, before 'secured' insert:—rigidly—.

Claim 15, line 3, after 'tympanum' insert:—of large area—. Line 4, before 'secured' insert:—rigidly—. Line 6, after 'support,' insert:—the inner diameter of said rim exceeding nine inches—.

Claim 16, line 5, before 'secured' insert:—rigidly—.

Claims **29**, **30** and **31**, line 1, after tympanum insert:—rigidly supported at its periphery—."

The same amendment contained the following discussion (Tr., 408-409-410):

"The foregoing amendments are made as the result of an oral interview recently had with the Examiner, at which it was agreed that the said amendments would not only more clearly define the invention, but would also render the material distinctions between the same and the prior art, including a number of patents which show horns or amplifiers of paper or other similar material directly associated with the reproducer needle, clearly apparent. It is essential to the success of applicant's machine that the tympanum be of large area and that the base of the vibratile portion thereof exceed nine inches in diameter, and furthermore that the peripheral edge of the tympanum, exterior of the vibratile portion, be rigidly secured or tightly gripped between the rings

of the supporting frame. These definitions of the essential characteristics of the invention have been included in the claims by the amendments aforesaid, and said claims are, therefore, believed to be allowable.

The Examiner's objection that applicant indicates only the lower limit of the diameter of the tympanum and does not include both limits, is believed to be without substantial foundation. Applicant has demonstrated that his invention is not wholly satisfactory when the conical tympanum is made with a basal diameter of less than nine inches. He has also found that tympanums of much larger diameter are eminently successful, but he is not prepared to even indicate any maximum limit in respect of such diameter, nor should a statement of such an upper limit be required. He has produced a highly successful device which is novel and useful, and as the prior art discloses no similar device either structurally or operatively considered, it is submitted that he has properly defined his invention in the claims, when he has distinguished the device, as so defined in the claims, from the prior art.

For example, in claims 1 and 2, it is stated that the vibratile conical tympanum is of large area rigidly supported at its periphery and freely exposed to unconfined air, so that when the tympanum is vibrated, it imparts to the surrounding free air, sound waves corresponding in intensity to the recorded sound waves. At a recent demonstration before the Examiner and his assistants, at the offices of applicant's attorneys in this city, it was made clearly manifest that the machine embodying the present invention did reproduce sounds or sound waves substantially corresponding in intensity to the recorded sound waves. The demonstrating machine was without any amplifying devices whatever in the form of a horn or sound-box, and the Examiner will recall that the sounds reproduced were clear, resonant, self-sustained

and of admirable quality and timbre, and of an intensity which obviously approximated that of the recorded sound waves. It is, therefore, believed that the expression 'substantially corresponding in intensity with the recorded sound waves' is correct and perspicuous and can give rise to no uncertainty or ambiguity. Of course, the term *substantially* implies a certain latitude, which the facts in the case would appear to justify, as all of the reproductions of recorded sounds by applicant's machine clearly indicate to the ordinary ear that they necessarily approximate the recorded sounds not only in intensity, but in timbre and quality.

In the other claims, as amended, the characteristic feature of mounting or supporting the outer edge of the vibratile tympanum rigidly on a support is brought out, and in some of the claims, the lower limit of the diameter of the vibratile portion of the tympanum is set forth, and as all of these amendments go to structure and differentiate such structure from the prior art, it is urged that the claims are no longer open to the objection of indefiniteness.

In respect of the prior art patents, not of record, but to which attention has been called, and which show horns or other amplifying devices made of paper or the like and directly associated with the needle or stylus, attention is called to the fact that these devices do not differ in character from the ordinary amplifying horn or sound-box, and are not per se vibratile tympanae, but mere amplifiers or condensers of sound waves. Furthermore, none of these prior art devices show any equivalent of a tympanum having its outer edge rigidly mounted in a support. In short, the horn-like reproducers are nothing more than the ordinary horn or amplifying megaphone having the stylus directly attached to its wall, so that the stylus sets up a localized vibration, which is confined within the flaring body of the horn and

amplified and reproduced as sound waves, not by any vibration of the horn as a whole, but merely by the condensation and amplification of the vibrations of the stylus and the portion of the material of the horn immediately adjacent the stylus connection."

In a subsequent amendment filed April 6, 1916, (Tr., 412) certain claims were cancelled, necessitating a renumbering of the remaining claims SO THAT THE CLAIMS IN INTEREST AT THIS POINT ARE NUMBERED 1, 2, *7*, *8*, *9*, *10*, *11*, *12*, *25*, *26* and *27*.

The application was then allowed, permitted to forfeit and was subsequently renewed.

In an amendment dated March 28, 1918 (Tr., 415) filed with the petition for renewal, claims *25*, *26* and *27* were cancelled. The solicitors said (Tr., 417):

"Claims *25*, *26* and *27* have been cancelled, as those claims will be incorporated, together with others, in a divisional application directed to the tympanum or diaphragm per se."

In a subsequent amendment dated April 18, 1918, instructions were given for amending claims 1, 2, *7*, *8*, *9*, *10*, *11* and *12* as follows (Tr., 419):

"In line 2, of each of present claims 1, 2, *7*, *8*, *9*, *10*, *11*, *12*, erase 'without an amplifying horn or chamber.' The matter to be erased is incorporated as an amendment in the communication filed February 23, 1916. Upon consideration, it appears that said matter is unnecessary to the claims from which it is erased."

In another amendment dated April 19, 1918, instructions were given for further amending claim *11* as follows (Tr., 421):

"Claim *11*, change line 6, as amended, to read,—an annular rim adjacent said support, the outer diameter of said rim exceeding nine inches, and a conical por-"

When the divisional application was filed (eventuating in patent No. 1,271,529) there were 13 original claims, claims 1 to 7 of which (Tr., 299, 300) correspond with claims 1 to 7 of the patent. Claims 8 to 11 and 13 were limited to a particular material for the tympanum. Claim 12 was as follows (Tr., 301):

"12. An acoustic device, comprising a tympanum freely exposed to unconfined air and comprising a conical portion upon the apex of which shocks or vibrations are adapted to be impressed in a direction such that said shocks or vibrations will move the entire conical portion bodily; said conical portion being of sufficient area to impart to the surrounding free air, when vibrated, sound waves substantially corresponding in intensity to the original shocks or vibrations."

This group of claims, namely, 8 to 13, inclusive, were cancelled by a subsequent amendment dated April 19, 1918 (Tr., 306). After the application was allowed on April 29, 1918 (Tr., 311) an amendment was filed on June 3, 1918, by which the following claim (claim 8 of the patent) was added in place of claim 12 (Tr., 308):

"8. An acoustic device, comprising a tympanum embodying a bodily movable, central conical portion, and an annular rim which encircles said conical portion and and which is rigidly supported, said conical portion being freely exposed on all sides to unconfined air and being of sufficient area to produce self-sustaining sound waves in the surrounding air when vibrated, substantially as described."

FILE COPY

Office Supreme Court
FILED
NOV 25 19
CHARLES ELMORE CR
CL

Supreme Court of the United States

OCTOBER TERM, 1930.

No. 19.

LEKTOPHONE CORPORATION,
Petitioner,

vs.

THE ROLA COMPANY,
Respondent.

REPLY BRIEF FOR PETITIONER.

WILLIAM H. DAVIS,
of Counsel.

GALLO & ACKERMAN, Inc., 142 Liberty Street, 'Phones—Hitchcock 3078–9.

INDEX.

		PAGES
1.	Infringement	1
2.	Validity	3
3.	How Hopkins' Acoustic Device Got Into the Radio Art	8
4.	Respondent's Contention That Claims 4 and 8 Are Void for Indefiniteness and As Claims for a Result; and Counsel's Interpretation of This Court's Decisions in the *Minerals Separation Cases*	10
5.	Some Other Incorrect Assertions in Respondent's Brief	15

CASES CITED.

Compagnie, etc., vs. Chanoit (France)	6
Davis, etc., vs. Radio-Electrique (France)	6
Keystone vs. Phoenix, 95 U. S., 274	12
Lektophone vs. Brandes, 20 F. (2d), 155	6
Lektophone vs. S. G. Brown, Ltd. (England)	7, 22
Lektophone vs. Colonial, unreported	6, 20
Lektophone vs. Sylo, 11 F. (2d), 421	6
Lektophone vs. Western Electric, 20 F. (2d), 150	6, 21
Minerals Separation vs. Butte, 245 F., 577	12
Minerals Separation vs. Butte, 250 U. S., 336	10-14
Minerals Separation vs. Hyde, 242 U. S., 261	10-14
Motion Picture Patents Co. vs. Universal, 243 U. S., 502	12
Radiophon vs. Loewe & Davis (Germany)	7
White vs. Dunbar, 119 U. S., 47	12

Supreme Court of the United States

OCTOBER TERM, 1930.

No. 19.

LEKTOPHONE CORPORATION,
Petitioner-Plaintiff,

vs.

THE ROLA COMPANY,
Respondent-Defendant.

REPLY BRIEF FOR PETITIONER.

1. *Infringement.*

Controverting our assertion that the only difference between respondent's device and the device of the patent is the substitution of a narrower rim of more flexible material, respondent's counsel assert (Brief, p. 8) that—

> "* * * at its base 'the effective area' [meaning the conical portion] of defendant's tympanum is of very much less diameter than that specified as essential in the patent,"

and they contrast (p. 9) the "relatively large, conical diaphragm" of the Hopkins patent, with the "relatively small, paper cone" of defendant's device.

But the fact is that the basal diameter of defendant's cone is 7-9/16 inches, which is larger than the 7.2 inches (eight-tenths of nine inches) of the Hopkins specification.

We regret that respondent's counsel continue to refuse to face this fact, as to which they succeeded in leading the Ninth Circuit Court of Appeals into error (see our main brief, p. 67).

It is apparent from mere inspection of respondent's loudspeaker that the designer of it has taken a large light stiff paper cone of the size recommended in the Hopkins patent, and has supported it from a rigid frame by an interposed flexible rim. He has departed from the structural embodiment disclosed by Hopkins only in substituting for the wider rim of less flexible material a narrower rim of more flexible material. No other difference exists.

We reiterate our position that this compensated change of rim is a mere colorable departure from the disclosure of the patent and does not avoid infringement (See our main brief, pp. 18-21, 56, 61 and 64).

It seems to us that discussion of the merits of the controversy is not advanced by respondent's counsel when they substitute for this reality a man of straw misrepresenting the size of respondent's cone in relation to the size of cone of the Hopkins disclosure (brief, p. 9); and misinterpreting the word "tympanum" used in the claims to include cone and rim, to exclude the rim of defendant's structure (See our brief in the *Miller case*, pp. 22-23).

It seems to us additionally unfortunate that counsel should add confusion to a very simple situation by referring (Summary of Argument, brief, p. 12) to the disclosure of the patent as—

> "a tympanum, the vibratile portion of which is less than nine inches at it base."

The words "at its base" can be applied only to the conical portion of the tympanum, whereas the nine-inch diameter discussed in the patent is the diameter of the cone plus the rim.

Again counsel say (Brief, p. 71):

> "Hopkins did not teach anything other than that the diameter of the whole tympanum between the so-called 'ponderous rings' should exceed nine inches; and any effort to show that a cone having a basal diameter of 7.2 inches comes within the teachings of the Hopkins patents, irrespective of the size and character of the rim, cannot be justified under any reasonable interpretation."

But Hopkins additionally taught what the size of **conical portion** of his direct-acting loudspeaker should be, when he said the conical portion should exceed in area one-half the total area nine inches in diameter within the surrounding annular frame. Even the Ninth Circuit Court of Appeals, in its opinion in the instant case, said, when it was comparing the size of Hopkins' cone with the size of the Starling & Cole cone, that Hopkins disclosed as a minimum a cone "whose base was 7.2 inches (eight-tenths of nine inches)" (Pamphlet, p. 87).

2. *Validity.*

Respondent's counsel summarize their attack upon the validity of the patent in the following words (Brief, p. 30):

> "How then did it involve invention to merely increase the size of the conical diaphragms with the flexible annular rims of the telephone and sound box art to the size which the other patents and publications had taught was necessary for a diaphragm which was to be used in connection with a phono-

graph in free and unconfined air. It will be borne in mind that the device of the patent in suit was designed for use with a phonograph."

That attack upon the validity of the patent was first decided in favor of the patent by the Patent Office. The examiner at one time rejected Hopkins' claims on that combination of references (See second office action, dated Feb. 7, 1914, A. F. W., 9-10). In reply to that rejection, the applicant said (A. F. W., 14):

"We respectfully solicit a careful consideration of the new claims 11 to 16, inclusive, which have been redrawn, following somewhat the form of new claims 1 and 2, to define a tympanum of such area as to produce directly regenerated sound waves substantially corresponding in intensity or amplitude to the recorded sound waves. That is to say, a tympanum adapted to regenerate by its own movements when vibrated by the record, the original sounds, without the interposition of any horn or other confining transformer. The Examiner will recognize, we believe, that such a tympanum has long been sought for by those most skilled in the art, and this is evidenced by the patents cited, such as Shanks, Amet and Lumiere."

And (A. F. W., 15):

"In our opinion the suggestion that there is no invention in the form of regenerating tympanum devised by the applicant, is entirely refuted by the Lumiere patent. If the small reproducer diaphragms of conical shape were in themselves sufficient to show those skilled in the art that the difficulties encountered by Lumiere could be overcome by adopting the form of tympanum adopted by the applicant,

then Lumiere would have adopted that form. The fact is that the applicant has succeeded where others, and those most skilled in the art, have failed, and under those circumstances deductions which might otherwise be drawn from the earlier different, but now suggestive, patented structures, are overcome by the historical fact."

And (A. F. W., 19):

"We hardly know what we can say in regard to that paragraph of the Examiner's letter which suggests that the applicant's accomplishment does not involve invention. As we understand it, the argument is that Lumiere proposed to use a large diaphragm, but not a conical diaphragm; that small conical diaphragms are old in sound boxes, and that consequently there is no invention in using a large conical diaphragm. It seems to us that this proposition need only be stated to refute itself."

And (A. F. W., 20):

"On the question of invention the Lumiere patent is pertinent to the present discussion only because it shows that prior to the applicant, the art did not know how to accomplish the applicant's result."

Thereupon the examiner withdrew this ground of rejection and acknowledged the patentability of Hopkins' invention over this combination of references.

The same defense has been rejected by every tribunal in this country and abroad that has passed upon the validity of Hopkins' patents.* Campbell, D. J., in the

*Even Judge Bodine did not rely on that defense but held that the Lumiere patents alone constitute a complete anticipation (Pamphlet, p. 49). This was reversed by the Third Circuit Court of Appeals.

Sylo case, rejected it with the remark quoted at pages 30-31 of our main brief. Thacher, D. J., in the *Western Electric case,* rejected it after full discussion quoted on pages 31-33 of our main brief. The Third Circuit Court of Appeals in the *Brandes case* rejected it, discussing the Lumiere patent in the words quoted at pages 27-29 of our main brief, and saying of the sound box and horn combination patents (Pamphlet, p. 57):

> "So also is he visited with notice as to the metallic sounding diaphragm used in confined space but these threw no light upon Hopkins' problem."

Galston, D. J., in the *Colonial case,* rejected it in full discussion found at pages 123-124 of the Pamphlet. The judgment of the Civil Tribunal of the Seine, in the *Chanoit case,* rejected it in the discussion found at pages 152-155 of the Pamphlet. This decision was affirmed by the Court of Appeals of Paris which said (Pamphlet, p. 167):

> "Gaumont patented an apparatus which comprises a diaphragm acting in a confined space and communicating with a horn. His innovation consists in the fact that the diaphragm has a conical form, but no comparison can be made between this machine and the Davis patent which entirely excludes the use of a diaphragm acting in confined space, and of a horn."

The Civil Tribunal of the Seine again rejected it in the *Radio Electrique case,* in a discussion found at page 177 of the Pamphlet, and this decision was affirmed by the Court of Appeals of Paris, which said (Pamphlet, p. 189):

> "That the earlier publications offered in opposition by the Societe Radio-Electrique are based on

entirely different conceptions; that the Ader apparatus consists of a parchment membrane stretched over a drum case; that Maxwell's is composed of a cone and a truncated cone with their bases opposite each other and supported by a wooden frame vibrating inside a box filled with fibrous material; that Brown has patented a confined diaphragm apparatus of conical form and Lumiere an apparatus comprising one or several elements, each constituted by a flat sheet of an elastic material twisted on itself."

The Chancery Division of the High Court of Justice at London rejected it in a discussion found at pages 206-209 of the Pamphlet, from which we extract the following:

"Was there a sufficient inventive step in passing from Stroh to Hopkins? To answer this question it is necessary to project the mind back so that it may assume the outlook of the inventor, having regard to the state of knowledge at the date of the patent in suit. I think that at that time to remove the sound box from a diaphragm of the Stroh type and to enlarge the diaphragm so as to give it a diameter of at least 9 inches was a sufficient inventive step to support Claim 1 of the patent in suit. It seems to me to be impossible to say that in the then state of knowledge it was obvious what the result of these changes would be."

And the German Court rejected it in the discussion at pages 243-246 of the Pamphlet, terminating with the following:

"All the prior publications discussed up to now deal in no way with large-surface diaphragms and are therefore eliminated for this reason. Nor can

it be conceded to the plaintiffs that a disclosure intended for the small diaphragm in sound boxes could be transferred directly to large diaphragms operating on unconfined ambiant air. Previously, the development has always been towards strengthening the small diaphragm by a horn effect; no one has ever struck the idea of using instead hornless large diaphragms. For this reason all prior publications discussed up to now must be immediately eliminated."

3. *How Hopkins' Acoustic Device Got Into the Radio Art.*

Respondent's counsel say (p. 5 and pp. 77-78) that "the device of the patent made no impress on the phonograph art," and suggest that the paper cone loudspeakers for use with radio receivers were developed quite independently of Hopkins' work, and that it was only after this independent development that it "occurred to the patentee or his attorneys that this Hopkins phonograph patent could be used to cover such radio cone loudspeakers" (p. 5); and that "whatever recognition was given to it was by reason of its 'nuisance value'" (p. 78).

The truth of the matter is that the **acoustic device of Hopkins' invention was first introduced into radio loudspeakers** by Mr. Farrand* in 1921, **as a direct result of his observation of its performance in a phonograph which was then being marketed by Hopkins' licensee, Pathe Freres Phonograph Company and Mr. Farrand, recognizing that he had no right to use this acoustic device in a radio loudspeaker without license from the patentee,**

*Mr. Farrand has since become "an officer of the plaintiff corporation and one of its expert witnesses in this case" (Respondent's Brief, p. 5), but at that time he was not connected with Lektophone Corporation (Tr., 83).

proceeded to negotiate for and acquire such a license. Mr. Farrand said (Tr., 82-83):

> "The circumstances under which I began the manufacture of the Phonetron were as follows:
>
> I was interested in developing a wireless telephone system which requires a loudspeaker. I heard of the development and manufacture of the phonograph called the Actuelle, by the Pathe Phonograph Company, and sought to use that as a loudspeaker. I tried other types of diaphragms, and pleated paper diaphragms. The use of a diaphragm without a horn particularly appealed to me, because loudspeakers had what were called 'horny' sound, and reverberations that were objectionable, and I thought that the cone diaphragm, working directly on the air, without the use of the horn, would probably give more faithful reproduction. * * *
>
> The loudspeakers that were on the market at that time were sound-box and horn loudspeakers.
>
> * * * * * * *
>
> As to what I found with respect to the possibility of getting a license for a radio loudspeaker—I found that the Pathe Phonograph Company had an exclusive license, and I found that there were indications that I could get a license to manufacture the product if I conducted negotiations with the Lektophone Corporation and were given a license limited to the radio field."

In view of this evidence, the use of Hopkins' acoustic device in radio loudspeakers ought not to be described as "entirely fortuitous" (Respondent's brief, p. 9).

Nor do we think counsel ought to say that "no device corresponding even remotely to Hopkins' disclosure has

ever been manufactured commercially" (p. 34) and "Hopkins' device was never built, except experimentally" (p. 54), merely because your petitioner Lektophone Corporation is not a manufacturer; when the evidence is that up to the date of the trial its licensees had manufactured and sold approximately 1,250,000 of the patented loudspeakers (Tr., 86) for phonographs (Tr., 82) and radio receivers (Tr., 83-85).

When counsel say that these licensed devices do not "correspond even remotely to Hopkins' disclosure," they prejudge the issue; and certainly against what must have been the opinion of those who paid royalty.

4. *Respondent's Contention That Claims 4 and 8 Are Void for Indefiniteness and As Claims for a Result; and Counsel's Misinterpretation of This Court's Decisions in the* Minerals Separation Cases.

It does not seem to us that there is anything vague or indefinite about these claims. They certainly define a structure, not a result. They define the invention as a three-element mechanical combination, freely exposed to unconfined air, and of such size as to directly recreate sound waves on the surrounding free air, that is, without the interposition of a sound-box and horn. **This is the essence of the Hopkins invention.**

Claim 4 says that the base of the conical portion shall exceed in area one-half the effective area of the tympanum, and that the tympanum shall be of sufficient area to impart to the surrounding free air when vibrated sound waves substantially corresponding in intensity to the original sound waves. Claim 8 says that the conical portion itself shall be of sufficient area to produce self-sustaining sound waves in the surrounding air when vibrated. This language was chosen by the applicant and agreed to by the examiner "to distinguish the pres-

ent machine from the ordinary machine in which the regenerator comprises a reproducer and a trumpet" (See our main brief, pp. 57-58).

If Hopkins had stopped with the mere exposing to unconfined air of the small conical diaphragms of the sound-box and horn combination patents, the sound spectrum would not have been produced in even balance. The low frequency would have been missing to such an extent as to destroy the timbre of the reproduction (Hazeltine, Tr., 100-101; Hopkins, Tr., 80; and our main brief, pp. 11-12). Hopkins found that in order to achieve without a horn the balanced reproduction of sound that a horn achieved (although with accompanying distortions), the loudspeaker acting directly on unconfined air had to be enlarged; that with the particular structural embodiment disclosed in his patent the overall dimensions had to be substantially nine inches and the active conical portion had to occupy at least half of that area.

It is our position that respondent's direct-acting loudspeaker, many times larger than the sound-box and horn diaphragm (main brief, p. 12) is plainly an engineer's embodiment of Hopkins' inventive thought; that faithful sound reproduction does in fact demand this multifold enlargement, substantially to a nine-inch overall diameter in the structural embodiment disclosed by Hopkins; that respondent's structural embodiment also demands such enlargement, as is evidenced when respondent selects a large light paper cone of the very size recommended by Hopkins (main brief, p. 56); that the disclosure of the specification as to size does not critically mark the beginning of a new result, but enlighteningly discloses the size necessary for best quality of reproduction (Miller brief, pp. 44-45); and that the language of claims 4 and 8 is appropriate to the invention and was insisted upon by applicant and allowed by the patent office so that the monopoly might not be limited by literalism, but would

unmistakably embrace substantial equivalents such as respondent has manufactured and sold (main brief, pp. 48 and 62).

It seems to us that respondent's counsel have misunderstood the decisions of this Court in the *Minerals Separation cases* when they say (Brief, p. 34):

> "These two claims [4 and 8] come precisely within the rule and condemnation applied by this Court in Minerals Separation vs. Hyde, 242 U. S., 261."

We think that, correctly understood, the decisions in the *Minerals Separation cases* support our position.

In *Minerals Separation* vs. *Hyde*, 242 U. S., 261, it had been represented in argument and proved by plaintiff's expert witnesses (see *Butte case*, 250 U. S., 350-352) that the new kind of froth formation, the result of the patented process, could not be obtained with more than a fraction of 1% of oil. This Court sustained the "fraction of 1%" claims but **held invalid the "small quantity of oil" claims because they were not "confined to the results obtained by the use of oil within the proportions often described in the testimony and in the claims of the patent as 'critical proportions' 'amounting to a fraction of 1% on the ore'"** (*Hyde case*, 242 U. S., 271). The claims were not held invalid for lack of definiteness but because the newly discovered result did not exist beyond a fraction of 1%.

In the *Butte case*, only the "fraction of 1% claims" were involved (250 U. S., 336). Defendant used an oily mixture (18% pine oil, 12% kerosene, and 70% fuel oil) in quantity 1.5% on the ore (p. 342). *Prima facie* this would not infringe (p. 342). Plaintiff contended, and defendant denied, that the kerosene and the fuel oil were inert and therefore not oils of the patent (pp. 343-344). This Court held (p. 345) that kerosene and fuel oils were oils of the patent, although less efficient than

pine oil, and after reexamining the patent disclosure and its relation to the prior art, found (a) that the "essence of the discovery" over the prior art Cattermole agglomeration process depended upon a critical reduction of the amount of oil which was said in the patent to be "a fraction of 1% on the ore" (p. 346); (b) that the claims with which the Court was there concerned were only the "fraction of 1% claims" and their express language could not be enlarged*; and (c) differentiation could not be made between efficient oils and inefficient oils about which nothing is said in the specification or in the claims (pp. 348-349). Plaintiff further attempted to differentiate between "frothing oils" and "non-frothing oils," characterizing the pine oil as a frothing oil and the kerosene and fuel oil as non-frothing oils. But the Court held that where the patent failed so to differentiate among the oils described in it, it was impossible for the Court to do so.

It was in that connection, having reference to the proposed differentiation among the oils covered by the valid "fraction of 1%" claims, that the Court used the language quoted by respondent's counsel here at page 36 of their brief, beginning—

> "To give such a construction to the patent would subordinate the clear description contained in it, * * * to an implied and vague description * * *," etc.

Although counsel assert (brief, p. 35) that the opinion of the trial Court in the *Butte case* (245 Fed., 577) "shows clearly" that defendant's mode of operation using more than 1% of oil was the mode of operation of the patent, yet the opinion in the *Butte* case shows that this Court found the evidence in that regard "far from

---

*Citing *Keystone Bridge Co.* vs. *Phoenix Iron Co.*, 95 U. S., 274, 278; *White* vs. *Dunbar*, 119 U. S., 47, 52, and *Motion Picture Patents Co.* vs. *Universal Film Co.*, 243 U. S., 502, 510.

satisfying'' (p. 353), and found it ''difficult to see'' how respondent's process on the evidence as to wastefulness and inefficiency ''can be other than substantially different from that of the petitioner's'' (p. 353).

In the *Minerals Separation cases,* the evidence was that the newly discovered effect did not begin to appear until the oil was reduced to about one-half of one per cent. and did not fully display itself until oil had been reduced to one-tenth of one per cent. (250 U. S., 351-352). Hopkins' invention began when he discarded the sound-box and horn, opening up the diaphragm to unconfined air; and it achieved its full effect at an overall dimension of nine inches. In the *Hyde case,* the ''small quantity of oil'' claims were held invalid and the ''fraction of 1%'' claims were held valid, because the discovery did not begin, and therefore did not differentiate itself from Cattermole, above 1% of oil. Indeed, the evidence was that it did not display itself above one-half of 1% of oil. But this Court refused to restrict the claims to one-half of 1%, saying (250 U. S., 341):

> ''Thus was it plainly held proper for the patentees to claim a reasonable degree of variation—'within the scope of the claims'—in the amount of oil to be used in the application of their discovery in practice, and that the restricting of the amount to a fraction of one per cent. on the ore was reasonable and lawful.''

It is noteworthy that respondent's counsel attempt to support their limiting argument to which, as it seems to us, the decisions of this Court in the *Minerals Separation cases* are misapplied, by insisting (pp. 3-4) on the estoppel which the District Court found, but the Ninth Circuit Court of Appeals explicitly rejected (main brief, p. 6).

5. *Some Other Incorrect Assertions in Respondent's Brief.*

(a) Without reference to any supporting evidence, for there is none, respondent's counsel say (Brief, p. 50) that in respondent's device—

> "* * * the limp leather rim does not 'maintain the form and neutral position' of the cone."

The testimony of respondent's own witnesses Tenney and Jensen (Our main brief, p. 20) is to the contrary. The assertion is, in fact, essentially modified, at page 67 of respondent's brief, where counsel say—

> "It does not support the cone *stiffly* in true axial alignment, as with Hopkins, but *flexibly.*" (Emphasis ours.)

Counsel correctly say (Brief, p. 71) that we emphasize the yielding character of the support by the rim *l* in Hopkins' combination; but they incorrectly add that—

> "* * * there is no basis for this in the patent specification."

We do not think an unprejudiced reader could possibly make that statement about the Hopkins disclosure. That the support afforded by the supporting rim *l* is a flexible and yielding support seems to us inescapably evident from the structure itself. That the cone should be yieldingly supported and so capable of bodily sound-producing movement is the only reason that could be thought of for interposing the flat rim between the cone and the frame. The "intended object" is stated to be "a simultaneous movement of the whole conical portion of the tympanum" (pat., p. 2, lines 121, et seq.). In

the very first disclosure of his invention, in his parent application, Hopkins said (see our brief, p. 10):

> "The plane peripheral portion *l* * * * yields sufficiently to permit of the required motion of the conical portion * * *."

And when counsel came to urge that Hopkins' work was not inventive, they assert (Brief, pp. 30-31) that the "veriest tyro" would know that the inflexibility of the conical diaphragm must be modified by a "yielding rim" between the cone and the frame to permit "the bodily movement of the cone."

Petitioner's counsel say (Brief, p. 69)—

> "The patent contains not one word or suggestion of the use of a different or more flexible material for the rim and for the cone. * * *"

But the patent says (p. 2, lines 127, et seq.):

> "* * * it is possible to form radial or concentric corrugations in the plane peripheral portion *l*." (See our brief, pp. 13-14.)

(b) Counsel correctly say (brief, p. 68) that the assumption of equivalent mode of operation is fundamental to our argument.

But counsel say that this assumption cannot stand "in the face of the proofs of the diametrically opposed functions of the sound-deadening rim of Rola and the sound-generating rim of Hopkins." As we pointed out in our brief in the *Miller case* (pp. 17-21), this attempt to differentiate on the basis of the amount of sound produced by the supporting rims is trifling as matter of

fact (Hazeltine, Tr., 31-32; Tenney, Tr., 49-50 and 66; and Hazeltine, Tr., 93), and insignificant as matter of law. Infringement is to be determined by determining the cooperative relation to one another of the elements of the patented combination, disregarding differences which may exist in the individual characters of the two rims when studied apart from the combination only in contrast with each other. It is noteworthy that counsel make no attempt to controvert that well-established principle of law.

(c) Respondent's counsel say (p. 10) that when the Hopkins device is made of smaller size it will rattle and blast, referring to the record at pages 52-53. But it was definitely shown on rebuttal that the blasting observed in defendant's model of the Hopkins device (Ex. 17)—

> "was due to the striking of the pole pieces in the driving motor" (Hazeltine, Tr., 91).

It was another example of the frequently observed phenomenon that experts for defendant usually succeed in making the patented device so that it will not work properly.

(d) Respondent's counsel say (p. 43) that in the *Brandes case*—

> "The question of size apparently was not urged * * *."

But it was urged in precisely the same way that it is urged here (see our brief in the *Miller case*, pp. 31-32).

(e) Respondent's counsel say (Brief, p. 52):

> "If Hopkins did anything, it was to extend the crisp vibratile material of his tympanum beyond the edge of the cone in the form of a flat, annular rim, integral with the cone."

But the fact is that this had been done in the small conical diaphragms of the sound-box and horn combination patents as in Kraemer (Tr., 340-342), Edison (Tr., 345), Johnson (Tr., 392, 394) and Stroh (Tr., 428). It was not in the form or material of the rim, but in throwing away the sound-box and horn, opening up the diaphragm to unconfined air, and enlarging it until it became an effective direct-acting reproducer of sound without the assistance of a sound-box or horn, that Hopkins departed from the sound-box horn combination patents of the prior art.

(f) It is repeatedly said in respondent's brief (pp. 17-18 and 73) that the defect of blasting "could not possibly have confronted Hopkins at the time he filed his applications" when the available power was less than it is in modern radio receivers. Counsel cite no evidence to support their assertion that the lesser power available in the old days would not cause blasting of a cone unsupported at its edge. There is no evidence to that effect. Hopkins' uncontradicted testimony is to the contrary (Tr., 74).

(g) The structures of the prior art patents are not difficult to understand from inspection of the patents themselves. Argumentatively, respondent's counsel make certain statements about some of these patents that seem to us unjustified. Thus:

(1) Of the Dann & Lapp patent 338,660, respondent's counsel erroneously say (Brief, p. 18):

> "This early patent shows a conical diaphragm apparently three or four inches in diameter * * *."

But the fact is that the patentees say, as to the diameter of the base of the cone—

"we prefer it shall equal and even slightly exceed that of the contiguous inner end of the mouthpiece B, of which it forms practically a conical extension" (Tr., 471).

The diameter of the inner end of the telephone mouthpiece is about one-half inch. The device demonstrated at the trial was not "constructed in accordance with this patent," but was a Rabelaisian enlargement, having a mouthpiece suited to a Pantagruel. The Dann & Lapp patent was properly grouped by the District Court in the instant case (Pamphlet, p. 82) along with the small diaphragm sound-box and horn patents to Brown, Stroh and English.

(2) Of the Maxwell patent, counsel say (Brief, p. 20) that it disclosed a three-element combination of the Hopkins patent—

"* * * the cone being represented at B, and the rim at A. This rim in turn is fastened to the rigid member forming the housing or box-like structure."

But the fact is that the rim of Maxwell's conical vibrator (Tr., 222) is fastened directly to the flat sounding-board A so as to avoid any flexible connection between the vibrator and the sounding-board. The member A is not a "rigid member forming the housing or box-like structure," but is the sounding-board of the device, as the Ninth Circuit Court of Appeals in the instant case pointed out, saying (Pamphlet, p. 97):

"* * * the conical sheepskin diaphragm is only a part of the vibrating element, the balance being the thin board to which it is attached."

To interpose a flexible connection between Maxwell's conical vibrator and his sounding board would be to defeat his purpose, which is to impart the vibration to the sounding-board.

As Galston, D. J., said, in the *Colonial case* (Pamphlet, p. 122):

> "The sounding-board of Maxwell is certainly not the flexible rim of Hopkins."

(3) Of the Lumiere patents, counsel say (p. 21) that

> "they enjoyed considerable commercial development in the early days * * * "

and (p. 41) counsel criticize the assertion in the decision of the Third Circuit Court of Appeals—

> "that the Lumiere patents attained no position in the practical art"

saying that—

> "The record in the present case shows that some 40,000 of these Lumiere devices were actually manufactured and sold by the Victor Company."

But, as we pointed out in our brief in the Miller case (pp. 32-33), the evidence as to commercial use of the Lumiere loudspeakers was stronger in the record before the Third Circuit Court of Appeals than it is in the present record, which definitely shows that the Victor Company discontinued the manufacture and sale of these devices in the year 1926.

As for counsel's expression "in the early days," this manufacture by the Victor Company was begun in 1925, long after the Hopkins devices had come on the market. During 1925 and 1926 these devices were manufactured for sale in competition with the Hopkins devices. In 1926 their manufacture and sale was discontinued.

Respondent's counsel are wrong when they say (p. 41)—

> "The record also shows that the Lumiere device was being manufactured in France as early as 1908 or 1909."

Reference to the record at page 37 shows only that a device was sent from France to the experimental laboratory of the Victor Company; that the Victor Company then experimented with diaphragms of the Lumiere type, but did not manufacture them. If they had been manufactured in France, no doubt counsel would have proved it, and that fact also would, doubtless, have been proved in the European litigation on the Hopkins patent.

(4) With reference to the Brown British patent 29,833 of 1910, counsel attach importance (brief, p. 29) to the statement—

> "When it is desired to make the sounds travel out into the room, a receiver of larger size is preferable" (Tr., 390).

Of this remark, Thacher, D. J., in the *Western Electric case* (See our main brief, p. 31; Pamphlet, p. 29) said:

> "This is purely casual and obscure, but it is as close as anyone came to Hopkins."

And interpreting this British patent Mr. Justice Tomlin in the suit against Brown said (Pamphlet, pp. 206-207):

> "It was suggested that the inventor there meant that the diaphragm should be worked in free air without a sound-box. I do not think so. I think he meant a larger receiver was desirable when a horn or amplifying device instead of an earpiece was to be used."

Respectfully submitted,

WILLIAM H. DAVIS,
of Counsel.

FILE COPY

FILED
NOV 12 1930
CHARLES ELMORE CROPLEY
CLERK

IN THE

Supreme Court of the United States

October Term, 1930

No. 19

LEKTOPHONE CORPORATION,
Petitioner,

vs.

THE ROLA COMPANY,
Respondent.

BRIEF FOR RESPONDENT

on Writ of Certiorari to the United States Circuit Court of Appeals for the Ninth Circuit.

CHARLES E. TOWNSEND,
WILLIAM A. LOFTUS,
THOMAS G. HAIGHT,
THEODORE S. KENYON,
Counsel for Respondent.

INDEX

PAGE

Statement of the Case 1

Jurisdiction 1

Decisions of the Courts Below 1

The Patent in Suit and a Brief Outline of Its History 2

Litigation on the Patent 5

The Construction of the Patent which Plaintiff Seeks 8

A Brief Comparison of the Device of the Patent and the Rola Loud Speaker 9

The Issues 11

Summary of Argument 12

1. Invalidity

(A) The patent in suit is invalid because the application on which it is based was not filed within the two years limited by Section 4897 R. S. 16

(B) The patent in suit is invalid because it is anticipated and lacks invention over the prior art 16

The Prior Art 16

Conical diaphragms operating in free air, i. e., without the provision of sound box and horn 16

(a) *Starling and Cole article* 16

(b) *Dann and Lapp patent 338,660* 18

(c) *Maxwell patent 216,051* 20

PAGE

(d) *Lumiere patents 986,477 and 1,036,529* 21

(e) *Ader, French patent 127,180* 24

Small conical diaphragms with yielding or flexible rims rigidly held at the periphery 24

(f) *Edison patent 963,362* 24

(g) *Johnson patent 1,180,401* 25

(h) *Stroh, British patent 3,393* 27

(i) *Brown patent 1,096,676* 28

Anticipation and Lack of Invention 30

(C) Claims 4 and 8 are invalid for indefiniteness or as claims for a result, unless they are restricted to tympana having diameters exceeding 9 inches 34

2. The construction which the Circuit Court of Appeals for the Third Circuit has given the patent in respect to the annular rim, is unjustified by the specifications, by the claims and by the Patent Office proceedings; and it is opposed to the weight of the American and English authorities; the same is also true if the decision be understood, as plaintiff contends, to hold that a tympanum, the vibratile portion of which is less than 9 inches at its base, is covered by the patent. In addition, no English or American court, outside of the Third Circuit, has adopted that view 38

3. The Rola loud speaker does not infringe 48

The Device of the Patent 51

(a) In the device of the patent, the area of the tympanum comprises the entire structure between the apex of the cone and the rings K, including the annular rim as well as the cone 51

PAGE

(b) The diameter of the tympanum must exceed nine inches 53

(c) The entire tympanum of Hopkins is of crisp, vibratile material 59

(d) The outer edge of this crisp, vibratile tympanum is rigidly mounted in the rings K 63

The Defendant's Device 64

(a) In Rola, the effective area of the tympanum comprises only a part and not all of the structure between the apex and the rings, i. e., only the cone and not the flexible rim 64

(b) The diameter of the base of the effective tympanum of Rola is materially less than nine inches 66

(c) The flexible rim between the tympanum and the metal frame of Rola is neither crisp nor stiff nor vibratile; and it is not a part of the sound generator; it is limp kid leather 67

(d) The outer edge of the crisp, vibratile tympanum of Rola is not rigidly mounted in the metal frame; it is flexibly supported from the metal frame by the limp leather rim 69

Some specific replies to, and comments on, some parts of Petitioner's Brief 70

Conclusion 78

Appendix 79

The French and German Decisions 79

Chanoit v. Davis 79

Davis et al. v. Radio-Electrique 80

The German Case 80

Table of Cases.

PAGE

Alice State Bank v. Houston Pasture Co., 247 U. S. 240 14
American Tube Works v. Bridgewater Iron Co., 132 F. 16 15

Carlton v. Bokee, 84 U. S. 463 36
Chanoit v. Davis (French, C. C. A. of Paris) (Lektophone Litigation, p. 164) 79
Concrete Appliance Co. v. Gomery, 269 U. S. 177 31, 74

D'Arcy v. Marshall, 259 F. 236 58

Eibel Process Co. v. Minnesota & Ontario Paper Co., 261 U. S. 45, 63 47

Gates v. Fraser, 153 U. S. 332 58

Holland Furniture Co. v. Perkins Glue Co., 277 U. S. 245, 257 37
Hollister v. Benedict, 113 U. S. 59 31
Hubbard v. Tod, 171 U. S. 474 14

I. T. S. Rubber Co. v. Essex, 272 U. S. 429 58, 75

Jewell Filter v. Jackson, 140 F. 340 58

Lektophone Corp. v. Brandes, 20 F. (2d) 155, 156 39
Lektophone Corp. v. Brown (British) (Lektophone Litigation, pp. 201, 204, 211) 45, 48, 50
Lektophone Corp. v. Colonial Radio Corp. (Lektophone Litigation, p. 112) 43
Lektophone Corp. v. Crosley (Lektophone Litigation, p. 61) 31, 40, 45
Lektophone Corp. v. Rola Company (D. C. No. Dist. Cal.), 27 F. (2d) 758 3
Lektophone Corp. v. Rola Company (C. C. A. 9), 34 F. (2d) 764 20, 23, 29, 33, 74
Lektophone Corp. v. Western Elec. Co., 20 F. (2d) 150 17, 44

PAGE

Marchand v. Emden, 132 U. S. 195 36
Merrill v. Yeomans, 94 U. S. 568 36
Minerals Separation v. Butte, 250 U. S. 336 ..... 35, 36
Minerals Separation v. Hyde, 242 U. S. 261 ..... 34, 54

O'Neill v. Wolcott Mining Co., 174 F. 527, 535 15

Railroad Co. v. Mellon, 104 U. S. 119 69

Seymour v. Osborne, 11 Wall. 516 69

Vandenburgh v. Trueson Steel Co., 261 U. S. 6 31

Webster v. Splitdorf, 264 U. S. 463, 466 70
White v. Dunbar, 119 U. S. 47 72

IN THE

Supreme Court of the United States

October Term, 1930.

No. 19.

LEKTOPHONE CORPORATION,
Petitioner,

vs.

THE ROLA COMPANY,
Respondent.

On Certiorari to the United States Circuit Court of Appeals for the 9th Circuit.

BRIEF FOR RESPONDENT.

Statement of the Case.

Jurisdiction:

This case is here on a writ of certiorari to the Circuit Court of Appeals for the Ninth Circuit. The writ was issued, presumably, because of a conflict of decision between the Circuit Court of Appeals for the Third Circuit and the Circuit Court of Appeals for the Ninth Circuit, regarding the scope of patent No. 1,271,529, granted to one Hopkins on July 2, 1918.

Decisions of the Courts Below:

The petitioner[1] brought suit for an alleged infringement of this patent and another (No. 1,271,527) issued on the

[1] For convenience, Petitioner will hereinafter be referred to as "Plaintiff" and Respondent as "Defendant". The plaintiff's alleged invention will be referred to as "The Hopkins device" and the alleged infringing device will be referred to as "The Rola Loud Speaker". Throughout this brief, unless otherwise noted, italics may be assumed to be ours.

same date to the same patentee, in the District Court for the Northern District of California. The case was heard by Judge Bourquin, who held that the claims in suit of patent No. 1,271,527 were invalid and that the other patent, even if valid, had not been infringed by the defendant.[2] His decision was affirmed by the Circuit Court of Appeals for the Ninth Circuit.[3] Both Courts rendered careful and well-considered opinions. They will be found not only in the official reports and in the record, as indicated in the footnote,[4] but also on pages 74 to 107 of a pamphlet containing opinions and decrees of various courts in litigation instituted by the present petitioner, hereinafter cited as "Lektophone Litigation". As the Circuit Court of Appeals for the Third Circuit likewise held patent No. 1,271,527 invalid, that patent is not before this Court (except as it may be brought in by reason of its relationship to the patent in suit), there being no conflict of decision between Circuit Courts of Appeals in respect to it.[5] Hereafter, unless otherwise specified, when using the expression "patent in suit", it will be understood that we refer to patent No. 1,271,529.

The Patent in Suit and a Brief Outline of Its History:

The patent in suit is an alleged division of an application filed on July 14, 1913, and which later issued as patent No. 1,271,527. Both relate to sound reproducing instruments and had for their object a means for reproducing sound "from a record or equivalent element"[6] in free air, *i. e.* without the use of a sound box and horn.

---

[2] *Lektophone Corp.* v. *The Rola Company*, 27 Fed. (2d) 758.
[3] 34 Fed. (2d) 764.
[4] R. pp. 13, 112.
[5] *Webster* v. *Splitdorf*, 264 U. S. 463.
[6] R. p. 134.

The devices of each patent were primarily designed for use with a phonograph or gramophone. The invention is alleged in the specifications of the patent in suit to consist "in the provision of a tympanum of *novel construction*".[7] The tympanum is to be constructed of "light", "crisp", "strong", "vibratile" material, "having considerable rigidity within itself", and is to comprise "an *annular plane peripheral portion* or *supporting* rim", the outer edge of which is "*rigidly*" held or supported between two "ponderous" rings, and "a central conical *portion*" rising from the inner edge of the rim.[8] It is further stated in the patent that "if satisfactory regeneration of sounds" is to be had, the diameter of the tympanum, *i. e.*, "the aperture in the rings" should exceed 9 inches.[9] This latter feature was expressly made an element of all of the claims of the patent, save two, and was stated by the patentee during the prosecution of his application in the patent office to be of the very "essence" of his invention, and "*essential* to the success" of the machine. There are other statements in the specifications as to how the tympanum should be constructed. These will be hereafter discussed.

The claims, eight in number (all sued upon), are thus summarized by the District Court:[10]

> "Claims 1 to 8 are for the tympanum of the patents, claims 1, 2, 3, 5, 6, and 7 for a tympanum 'having a free area exceeding nine inches in diameter,' and claims 4 and 8, for one having 'sufficient area' to realize the invention. In his specifications and during proceedings prior to patents, Hopkins

[7] R. p. 136.
[8] R. p. 137.
[9] R. p. 137.
[10] R. p. 14; 27 Fed. (2d) 758, 759.

> committed himself to the theory that a tympanum exceeding nine inches in diameter alone would function, was necessary, and was his discovery and invention. Accordingly all claims are so taken. Likewise did he commit himself to a tympanum necessarily made of a particular kind of material and construction, tho not incorporated in any—these claims."

Mr. Hopkins, who is a patent attorney or solicitor by profession, was, at the time the alleged invention was made, employed by Thomas A. Edison and was making experiments with conical diaphragms to be used in connection with phonographs. At that time, conical diaphragms both with and without annular rims tightly gripped at their periphery were well known in the art, having been covered and described in many patents and publications which will be hereinafter referred to. As a result of his experiments, Hopkins evolved the device of the patent in suit. Mr. Edison was apparently not impressed with it, took little notice of it, and allowed Hopkins to leave his employ taking all of his models with him (R. p. 77). He went to a firm of patent attorneys (the predecessor of the firm which represents the plaintiff), which firm, five years after the application was filed, succeeded in having the patent in suit issued. The plaintiff corporation was also formed by this firm. The application for the patent had a rather stormy career in the Patent Office, and was only allowed after definite limitations as to the size of the tympanum and the method in which it should be secured at its edge, above, and to be hereinafter referred to, had been inserted in the claims, and after these features had been represented to the Patent Office as "essential elements" of the invention. For instance, accompanying one amendment, the patentee said:[11]

[11] R. p. 253.

> "We believe that it will now be apparent to the Examiner that the selection of the *particular dimensions is of the essence of the invention and attains novel results arising from the particular dimensions* and such as could not be obtained by the devices shown in the references."

Later, in response to another rejection by the Examiner, he said:[12]

> "*It is essential to the success of applicant's machine that the tympanum be of large area and that the base of the vibratile portion thereof exceed nine inches in diameter,* and furthermore that the peripheral edge of the tympanum, *exterior of the vibratile portion, be rigidly secured or tightly gripped between the rings* of the supporting frame. These definitions of the essential characteristics of the invention *have been included in the claims by the amendments aforesaid, and said claims are, therefore, believed to be allowable.*"

The device of the patent made no impress on the phonograph art. However, with the advent of radio broadcasting, and after the bringing out, in about 1924, by the Western Electric Company and possibly by a Mr. Farrand (who is an officer of the plaintiff corporation and one of its expert witnesses in this case) of paper cone loud speakers for use with radio receiving sets, it evidently occurred to the patentee or his attorneys that this Hopkins phonograph patent could be used to cover such radio cone loud speakers.

Litigation on the Patent:

Thereupon, suits were instituted on the patent from time to time by the present plaintiff, which had acquired

[12] R. p. 267.

title to the patents, and which is not a manufacturer but is simply engaged in granting licenses to manufacturers under some ten or twelve patents, including the patent in suit. The first suit was brought in the Eastern District of New York against the Sylo Lighting Fixture Company. It was decided in March of 1926 by Judge Campbell in favor of the plaintiff.[13] This decision was *reversed* by the Circuit Court of Appeals for the Second Circuit on the ground that there was no infringement, the Court specifically holding that it was not necessary for it to pass on the question of validity.[14] In reading this decision, it is important to bear in mind that much of the prior art offered in the present suit was not presented in that case. This is especially true of the Starling & Cole publication and the Dann and Lapp patent. Suit was also brought in the Southern District of New York against the Western Electric Company. The device there alleged to infringe was substantially the same as that which was before the Court in the *Sylo* case. Judge Thacher, who heard the *Western Electric* case, reached the conclusion that there was no infringement of the patent in suit.[15] He also held the claims then in suit of patent No. 1,271,527 invalid. His decree was *affirmed* by the Circuit Court of Appeals which again found it unnecessary to pass upon the validity of the patent.[16]

The type of loud speaker which was alleged in those cases to infringe is illustrated by a cut opposite page 44 of the Lektophone Litigation pamphlet. It consisted of two stiff paper cones placed base to base, with the apex of the one cone actuated by the operating rod and the other cone truncated. It was claimed that the sides of the truncated

[13] 11 Fed. (2d) 421, Lektophone Litigation, p. 1.
[14] 16 Fed. (2d) 7, Lektophone Litigation, p. 15.
[15] 20 Fed. (2d) 150, Lektophone Litigation, p. 25.
[16] 16 Fed. (2d) 10, Lektophone Litigation, p. 38.

cone corresponded to and were the equivalents of the annular rim of the patent.

Another suit was brought against the Brandes Products Corporation in the District of New Jersey, and resulted in a decree by the District Court that both patents were *invalid* and not infringed.[17] The decree in that case was reversed by the Circuit Court of Appeals for the Third Circuit.[18] It is the conflict between this decision and that of the Circuit Court of Appeals in the case at bar that has brought the case to this Court. The device claimed in that case to infringe is illustrated in a cut opposite page 60 of the Lektophone Litigation pamphlet. It had a thin rubber band between the edge of the base of the cone and the supporting rim. This was held by the Circuit Court of Appeals to be the equivalent of the annular rim of the patent.

That suit was followed by one against the Crosley Radio Corporation in the Southern District of Ohio, and resulted in a decision by Judge Hickenlooper that there was no infringement. He found it unnecessary to pass upon validity. The device claimed to infringe in that case is illustrated by a cut opposite page 72 of the Lektophone Litigation pamphlet. The edges of the base of the Crosley cone rested flexibly and yieldingly between layers of felt affixed to a two-piece tubular metallic ring. It was claimed that these layers of felt were the equivalent of the annular rim of the patent.

In the present suit, it is claimed that the limp kid between the periphery of the cone and the baffle board, although it has no sound regenerating qualities and is not of a "stiff, vibratile material," is the equivalent of the annular rim, and that it infringes notwithstanding the fact that

---

[17] 16 Fed. (2d) 934, Lektophone Litigation, p. 46.
[18] 20 Fed. (2d) 155, Lektophone Litigation, p. 55.

at its base "the effective area" of defendant's tympanum is of very much less diameter than that specified as essential in the patent, and although even the cone *plus* the rim is less.

In the case of *Miller Brothers,* which is also before this Court on certiorari, it is claimed that a connecting band of cloth is the equivalent of the annular rim.

A suit was also brought in the High Court of Justice of England against S. G. Brown, Ltd.,[19] where an attempt was made to have it held that a cone loud speaker utilizing a plain ring of thin paper between the edge of the cone and the wooden frame infringed the patent. This attempt was unsuccessful both in the Lower Court and in the Court of Appeals.

Some suits were also brought in France and one in Germany. These are analyzed in an appendix to this brief.

The Construction of the Patent which Plaintiff Seeks:

It is thus apparent that the plaintiff has tried and is endeavoring to have any cone loud speaker diaphragm of relatively large area, compared with those utilized in sound boxes, which employs a band or rim of any kind of material between the periphery of the cone (whether affixed or not) and the loud speaker support, adjudged to come within the scope of the patent, and thus to have given to the patent by *construction* an even broader scope and a wider range of equivalents than are ordinarily accorded to pioneer patents of the first importance. This construction is sought, in disregard of the limitations imposed by the Patent Office, and the claims, and notwithstanding that the device of the patent has had no commercial success or utility whatever in the phonograph art for which it was designed; and, that

[19] Lektophone Litigation, p. 192.

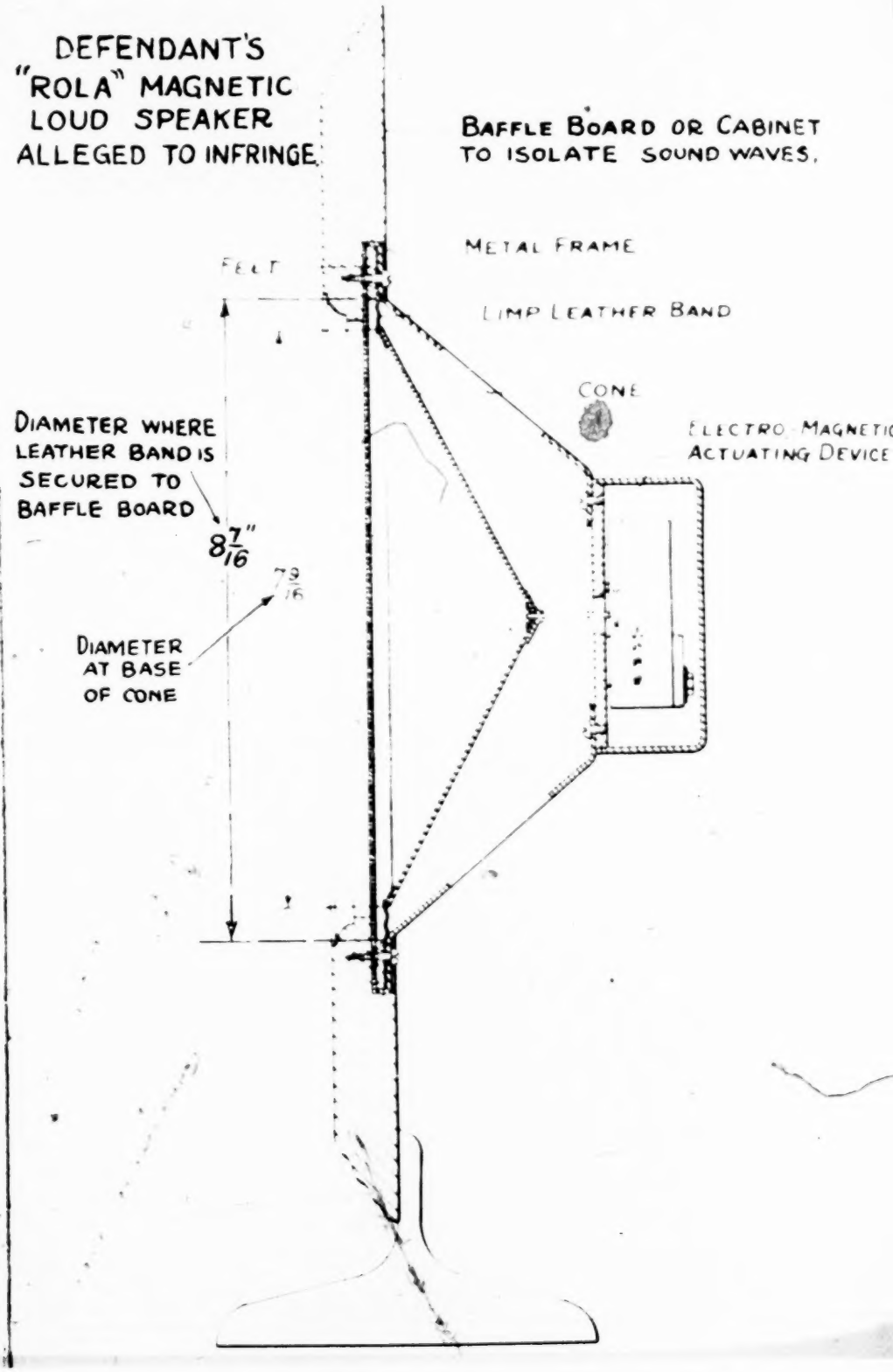
DEFENDANT'S
"ROLA" MAGNETIC
LOUD SPEAKER
ALLEGED TO INFRINGE
BAFFLE BOARD OR CABINET
TO ISOLATE SOUND WAVES.
METAL FRAME
FELT
LIMP LEATHER BAND
CONE
ELECTRO MAGNETIC
ACTUATING DEVICE
DIAMETER WHERE
LEATHER BAND IS
SECURED TO
BAFFLE BOARD
8 7/16"
DIAMETER
AT BASE
OF CONE

PLAINTIFFS' HOPKINS DEVICE OF PATENT IN SUIT.

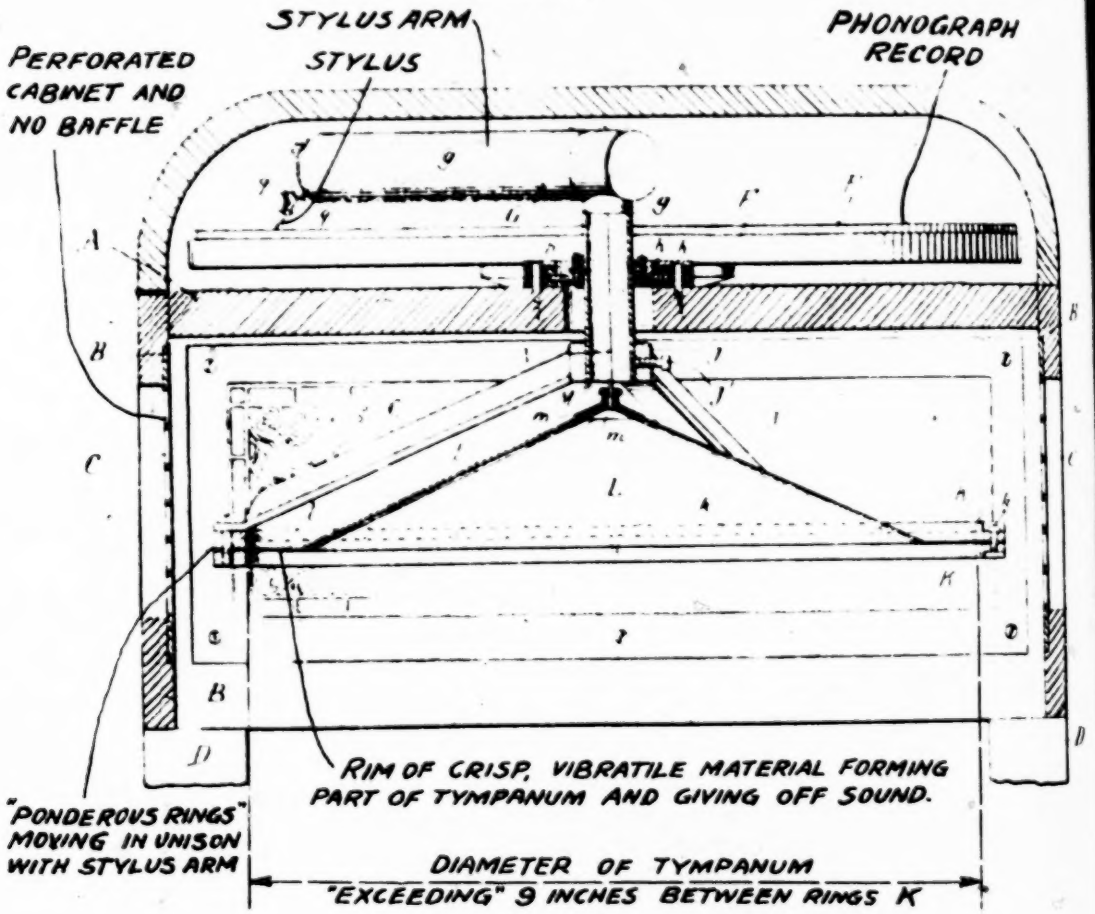

such utility as it may have in the radio loud speaker art was entirely fortuitous since that art was unthought of (at least by Hopkins) at the time of the alleged invention.

A Brief Comparison of the Device of the Patent and the Rola Loud Speaker:

On the accompanying page are illustrations showing the device of the patent and the Rola loud speaker. It is to be especially noted that Hopkins' structure is characterized by a relatively large, conical diaphragm, with a flat rim of the *same material as the conical portion,* the whole being termed a "tympanum" and required to be *greater than nine inches in diameter,* "if satisfactory regeneration of sound waves is to be obtained." The tympanum is required to be of "*crisp, strong material" throughout;* and this so-called "tympanum" is rigidly clamped at its rim by rings K and the whole is vibrated by means of a *stylus* attached to its apex, which in turn is actuated by the sound record of a *phonograph.* The flat rim of Hopkins' device gives off sounds and is an important element of the "tympanum".

The Rola loud speaker (Plaintiff's Exhibit 3) from which the illustration is made, employs a magnetic actuating unit for vibrating a relatively small, paper cone, said cone having a basal diameter of 7-9/16 inches. Fastened to the base of the cone is a band of limp *leather or "skiver"*, which in turn is secured to the surrounding frame. The over-all diameter within the inner edges of the frame is 8-7/16 inches. Around this frame is placed a "baffle-board", which prevents the sound waves given off at one side of the cone from setting up an interference with the sound waves from the opposite side of the cone. The leather rim in the Rola device gives off no appreciable sounds and is not a part of a "tympanum".[20]

[20] R. p. 68.

Indeed, the defendant's witness Jensen testified (R. p. 68) that if he were "speaking to a body of acoustical engineers, or electrical engineers, and tried to tell them that this was a tympanum, that soft leather kid, I think they would smile at me"; and that the purpose of the kid band is to hold the cone in position and also "to prevent the sound from the front part getting over to the back part of the cone" (R. p. 68).

Defendant's witness Tenny testified (R., p. 53):

> "Our kid membrane is a flexible resistive material, which to a greater extent insulates the edge of the cone from the supporting rim. When sound vibrations reach that flexible kid membrane, the softness and yielding qualities of it cause it to *absorb* a great proportion of that sound, * * * and prevent the bulk of that rattling."

When the Hopkins device, with its integral rim of stiff and vibratile material, is made of small size, it will produce rattling and blasting (R. pp. 52-53).

The witness Tenny testified that, to get satisfactory results from a Hopkins type cone, the diameter should approximate 18 to 20 inches, particularly in a radio loud speaker. This is borne out by Hopkins' admissions in the *Miller Brothers* case to the effect that he obtained his best results in a device having a diameter of 17 inches (see Record in Miller Bros. case, p. 282). The reason for this is that Hopkins never conceived of a baffle board, and, as stated by the witness Tenny (R., p. 53):

> "we found that a *baffle* of about three feet square insulates the back waves from the front waves, at all frequencies used in broadcasting * * *. However, we also found that a baffle three feet square was a *cumbersome and unwieldly piece of furniture,* and we

trimmed the size of that baffle down to the smallest we could get, which we finally adopted at 15½ inches."

The Issues:

The "sole" issue is not whether the "substitution of a narrower rim of more flexible material avoids the Hopkins patents" as alleged in plaintiff's brief (p. 5), nor is that the only difference between the device of the patent and that of the defendant, as the brief likewise alleges (p. 5). There are several material differences between the respective devices as before pointed out. There also are several issues as follows:

(a) Whether, so far as the rim is concerned, the teachings of the specifications that the rim is to be a part of the tympanum in the sense of a sound generator made of "vibratile", "crisp", "strong" material, may be disregarded and that any material which is used to connect the edge of the conical portion and the loud speaker support, but which is in no sense a sound generator or tympanum, is the equivalent of the rim described in the specifications.

(b) Whether a loud speaker such as the Rola, in which the cone is the only vibratile or sound producing element, and which is attached to a limp material, can be said to have a tympanum "rigidly supported at its periphery", or "its outer edge mounted on" a support or "secured" to such a support, as required in the claims of the patent.

(c) Whether a conical diaphragm, the sound generating portion or tympanum of which is materially less than 9 inches, infringes the patent.

(d) Whether the patent is not invalid, for reasons to be hereinafter discussed.

SUMMARY OF ARGUMENT.

1. The patent in suit is invalid because (a) the application on which it is based was not filed within the two years limited by Section 4897 R. S., and (b) because it is anticipated and lacks invention over the prior art.

The so-called three-element combination now claimed as the Hopkins invention was disclosed in many prior patents, and the fact that paper diaphragms of large area, both conical and flat, could be used to regenerate sound in free and unconfined air, was likewise disclosed in patents and publications prior to Hopkins.

(c) Moreover, claims 4 and 8 are invalid because of indefiniteness or as claims for a result, irrespective of size, unless they are restricted to cover tympana having diameters of 9 inches or more, as taught by the patent.

2. The construction which the Circuit Court of Appeals for the Third Circuit has given the patent in respect to the annular rim, is unjustified by the specifications, by the claims and by the Patent Office proceedings; and it is opposed to the weight of the American and English authorities; the same is also true if the decision be understood, as plaintiff contends, to hold that a tympanum the vibratile portion of which is less than 9 inches at its base, is covered by the patent. In addition, no English or American Court, outside of the Third Circuit, has adopted that view.

It is reasonably clear that the Circuit Court of Appeals for the Third Circuit held an annular rim not made of crisp, vibratile material to be within the scope of the patent, but it is by no means clear that the Court intended to hold that a tympanum having a basal diameter of less than 9 inches was covered by the patent.

3. The Rola loudspeaker does not infringe because it does not embody the "tympanum of novel construction" to which the teaching and scope of the Hopkins patent is limited:

(a) Fairly construed the Hopkins patent is limited to a unitary soundboard or tympanum, shaped into a cone portion and a plane peripheral portion of crisp, stiff, vibratile material throughout. Rola does not have it.

(b) Fairly construed the Hopkins patent is limited to a tympanum the vibratile portion of which is nine inches or more in diameter. Rola does not have it.

(c) Fairly construed the Hopkins patent is limited to a tympanum embodying a rim portion which is crisp, stiff and vibratile and therefore a part of the sound generator. Rola does not have it.

(d) Fairly construed the Hopkins patent is limited to a tympanum which is rigidly supported or mounted at its periphery. Rola does not have it.

4. Specific replies to, and comments on, some parts of petitioner's brief, viz: pages 12, 15, 21, 37, 38, 40-42, 59-60, 63 and 68.

ARGUMENT.

We will discuss the question of validity, and the decision of the Circuit Court of Appeals for the Third Circuit before the question of infringement, because the argument in respect to the latter can be more conveniently presented in that way.

I.

THE PATENT IN SUIT IS INVALID BECAUSE (A) THE APPLICATION ON WHICH IT IS BASED WAS NOT FILED WITHIN THE TWO YEARS LIMITED BY SECTION 4897 R. S., AND (B) BECAUSE IT IS ANTICIPATED AND LACKS INVENTION OVER THE PRIOR ART; AND (C) CLAIMS 4 AND 8 ARE INVALID FOR INDEFINITENESS OR AS CLAIMS FOR A RESULT, UNLESS THEY ARE RESTRICTED TO TYMPANA HAVING DIAMETERS EXCEEDING 9 INCHES.

It is urged in plaintiff's brief that because the Court below rested its decision on non-infringement, that the validity of the patent will not be considered in this Court. While it is true that in *Alice State Bank* v. *Houston Pasture Company,* 247 U. S. 240, it was said that this Court in that case would confine its "discussion to the matter relied upon in asking the intervention of this court", and in *Hubbard* v. *Tod,* 171 U. S. 474, that as the respondents did not apply for a certiorari, the Court would confine its consideration "to the examination of errors assigned by the petitioner", we respectfully submit that neither of those decisions are applicable to the case at bar. In the *Alice State Bank* case, the *petitioner* sought, after the case had been removed by certiorari, to advance grounds for reversal *other than the one upon which the writ was asked and granted.* In the *Hubbard* case, the Court below entered a decree to which the *respondents* in this Court *could have made some objection.* These cases but reiterate the rule which has long prevailed in the Federal Courts that an Appellate Court will not consider errors alleged to have been committed against an appellee, when the latter has not interposed a cross appeal. But in all those cases (many of which are collected in the opinion of the Circuit Court of Appeals for the Eighth Circuit in *O'Neill* v. *Wolcott Mining Company,* 174

Fed. 527, 535) the appellee *could* have interposed an appeal. In the case at bar, the decree of the District Court simply dismissed the bill,[21] and the decree of the Circuit Court of Appeals merely affirmed the decree of the District Court.[22] Moreover, both Courts found it unnecessary to pass upon the question of validity. *Consequently, the respondents could not have applied for a certiorari.* They could only seek in this Court a review of the *decree*, not of the *reasons* upon which the Courts based the decree.

As the whole case is before the Court, it is respectfully submitted that the question of the validity of the patent in suit should be determined by this Court, to the end that, if it is held invalid, all further litigation based on it will be at an end. *The public is, of course, vitally interested in whether or not this patent is valid.*

American Tube Works v. *Bridgewater Iron Company*, 132 Fed. 16, is directly in point. There a defence of license had been interposed in a patent suit and sustained. The Circuit Court entered "a decree dismissing the bill". The plaintiff then appealed to the Circuit Court of Appeals for the 1st Circuit. The opinion in the latter Court was written by Mr. Justice HOLMES, sitting as a Circuit Justice. He said [23]:

> *"The decree was general and therefore all defences are open here".*

Thereupon the Court considered the question of validity of the patent and held it to be invalid, and assigned that as one of the reasons for affirming the decree.

On the assumption that the Court will consider the question of validity, we will discuss the grounds upon

---

[21] R. p. 20.
[22] R. p. 132.
[23] 132 Fed. at p. 17.

which we claim that the patent is invalid, in the order above stated.

(a) On the question as to whether the patent is invalid because the application was not filed within the two years limitation provided by Section 4897 R. S., we will rest on the argument presented in the brief of the petitioner in *Miller Brothers Company* v. *Lektophone Corporation*, which is to be heard immediately following the present case.

(b) We will now discuss the validity of the patent in the light of the prior art.

The Prior Art.

In view of the concessions made in petitioner's brief (p. 30) that many of the prior art patents show diaphragms for phonograph sound boxes consisting of a conical portion and an annular rim of flexible yielding material, the latter held rigidly at the periphery, (the three-element combination claimed by the petitioner to be the Hopkins invention), it will not be necessary for us to review all of the prior art which is in the record. We will, therefore, discuss one publication and only a few patents.

Conical Diaphragms Operating in Free Air, i. e., Without the Provision of Sound Box and Horn:

(a) *The Starling and Cole Article,* appearing in "Talking Machine News" of July, 1907 (R. p. 470). Therein is shown a paper conical diaphragm 8 inches in diameter with complete instructions for its manufacture and application to a phonograph. These inventors say in their article:

> "Our object in the first place was to produce a diaphragm which should be large and rigid enough

> to set sufficient air in vibration to produce audibility without the intervention of a trumpet; our paper cone must be looked upon as a modified diaphragm and not in any sense a trumpet. * * *
>
> Although our experiments have been made with the 'Perfecta' it would be easy to adapt the 'Vibratophone' to other styles of machines. We appear to have selected roughly good sizes of cone and tube, *still there is doubtless room for experiment in the selection of diameter and length.* Celluloid and cardboard have been tried for making the cone, but in our experience paper is by far the best material."

There has never been any question raised by plaintiff as to the operativeness of this device; and in fact, one of them was actually demonstrated to the court in *Lektophone* v. *Western Electric Co.*, 20 Fed. (2d) 150 (Lektophone Litigation, p. 25), with the following results, as stated in the opinion of Judge Thacher:

> "The Starling and Cole publication of 1907 disclosed a vibrating cone employed as a sounding board without sound box or horn. This extraordinarily simple home-made device, constructed of a cardboard mailing tube and a paper cone, was shown to have a purity of tone surprisingly good in the low frequencies, which are difficult to reproduce in a sound-box and horn combination. Volume was lacking, and when, to increase its volume, this device was driven with increased power, unwelcome buzzing and rattling sounds were heard, apparently caused by the shaking of the unsupported edges of the extremely light paper cone" (Lektophone Litigation, p. 28).

The "increased power" referred to by Judge Thacher was of course not a factor in the early days of the phonograph, nor in the days when Hopkins filed his applications. As Hopkins testified at R. p. 79:

> "The amount of energy which we had available was very small, compared with what is used ordinarily today."

The tendency to rattle or buzz at certain frequencies is termed "blasting" in the decision rendered by the Circuit Court of Appeals, Third Circuit, in the *Brandes* case, *supra*. This subject is nowhere mentioned in the Hopkins patents, and obviously is an afterthought devised by Hopkins' attorneys in an effort to distinguish over the *Starling and Cole publication* in respect to a condition which could not possibily have confronted Hopkins at the time he filed his applications.

In any event, the art had already taught in respect to smaller, conical diaphragms, the feature of restraining the base of the cone by means of some sort of a band or rim fastened to a rigid support or frame.

(b) *The Dann and Lapp patent 338,660, March 23, 1886*, R. page 470.

This early patent shows a conical diaphragm apparently three or four inches in diameter, exposed to free air and having a flat yielding rim secured to a rigid support. It is useful either as a telephone transmitter or receiver, since the principles of the one are applicable to the other. (Testimony of Tenny, R. p. 60.)

These inventors in their specification say:

> "The sheet-metal diaphragm A is constructed with a central conical portion, a, which may be formed integral therewith or made separately and attached by solder, brazing, or in any other suitable manner. The diameter of the base of the hollow cone may be varied considerably; but we prefer it shall equal and even slightly exceed that of the con-

> tiguous inner end of the mouthpiece B, of which it forms practically a conical extension." (R. p. 471.)

An actual test and demonstration was made at the trial, of a device constructed in accordance with this patent, which clearly showed that it was capable of producing self-sustaining sound waves in free air, the model being so constructed that the mouth-piece B could be applied or removed as desired.

Mr. Tenny at R. p. 59 related the results of this test and stated that when the horn or trumpet was removed it merely changed the directivity of the sounds but not their intensity.

Plaintiff's witness, Professor Hazeltine, who was present during the test, admitted at R. p. 99 that this Dann and Lapp structure employing a four-inch cone gave off "self-sustaining sound waves," without the aid of a horn or trumpet.

The Court will note that the Dann and Lapp device provides a yielding rim for the cone, which in turn is attached to the rigid structure B, so that if anything is lacking in the Starling and Cole paper cone in the way of a support for the rim, anyone skilled in the art could readily supply it from the teachings of the Dann and Lapp patent. It is also to be noted that the Dann and Lapp device has the three-element combination of the Hopkins patent, to-wit, the cone, the rim, and the rigid support. From the standpoint of similarity, the Dann and Lapp structure more nearly approaches defendant's device than does the Hopkins structure, in that Dann and Lapp have an electrically-actuated operating unit for the cone, whereas Hopkins has a mechanically-operated stylus; and moreover, the part B of Dann and Lapp functions as a baffle, which is a necessary adjunct to the Rola device, whereas no sug-

gestion whatever of a baffle is to be found in Hopkins' patents.

Concerning the Dann and Lapp patent, the Circuit Court of Appeals in the *Rola* case (34 F. (2d) 764) said:

> "The plane portion attached to a rigid structure, with a four inch central cone, *the device described in this patent was operated successfully at the trial to produce self-sustaining sound waves.*"

This patent and the evidence relating to it were not before the Circuit Court of Appeals for the 3rd Circuit in the *Brandes* case.

(c) *Maxwell patent 216,051*, June 3, 1879, R. p. 308:

This shows a conical diaphragm or tympanum of large size, the dimensions stated in the specification being from *seven to eight inches.* A device constructed in accordance with Fig. 1 thereof was actually demonstrated successfully at the trial in the District Court. (R. p. 59).

The Maxwell specification states:

> "I have found also by experiment that a vibrator that is from *seven to eight inches* in diameter through the center from one outer edge to the other is the most efficient, and that when they are much smaller than this the vibrations made by the vocal organs are of a nasal character; but when an apparatus of proper size is used at one end of the line, then a much smaller one may be used at the other without impairing perceptibly the effect." (R. p. 311.)

Here again we have the three-element combination of the Hopkins patent, the cone being represented at B, and the rim at A. This rim in turn is fastened to the rigid member forming the housing or box-like structure. Concerning

this patent the Circuit Court of Appeals, Ninth Circuit (34 F. (2d) 764,770) said:

> "These diaphragms are fastened to and upon the opposite side of a thin board of *soft pine or other vibrating material.* It is sufficient for our present purposes to note that the conical sheep skin diaphragm is only a part of the vibrating element, *the balance being the thin board to which it is attached.*
>
> An apparatus such as is described in the Maxwell patent, with a single cone, and another with two cones apex to apex, as therein described, were constructed and successfully operated as radio loud speakers at the trial." (R. pp. 123-124.) (Lektophone Litigation, p. 97.)

(d) *Lumiere Patents 986,477, March 14, 1911; and 1,036,529, August 20, 1912* (R. pp. 352 and 364, respectively):

The diaphragms of these patents are pleated, so that they assume what may be termed "a quasi-conical form." The rim is much more flexible than the apex or center, and the rim is rigidly held in place between the clamping rings.

The importance of these patents is that they enjoyed considerable commercial development in the early days, and as shown by the record (p. 41), 40,000 of these were manufactured and sold by the Victor Talking Machine Company.

One of these commercial devices is in evidence as Defendant's Exhibit 14. Mr. Tenny testified at page 47 that it was purchased in a store somewhere in Oakland, California, just prior to the trial, and that it had a Rola actuating unit.

It is stated in the Lumiere Patent 986,477:

> "I have found, however, that I am able to make a diaphragm according to the present invention, as large as *ten inches or more in diameter,* without impairing the quality of the reproduction, and by means of this diaphragm, I at the same time, attain a much greater volume of sound than with the smaller diaphragm. This amplification of the sound, I believe to be due, not only to the increased diameter of the diaphragm, but also to the increased surface area of the diaphragm produced in the construction above described, by the plaitings or crimpings or folds in the material of the diaphragm; this appears to have the effect of putting into motion a greater volume of air and so increasing the volume of sound.
>
> * * * * * * *
>
> The advantage arising from the use of a diaphragm constructed as above described, is that the volume of sound produced is sufficient to enable me *to dispense with the usual amplifying horn,* and in this way, much of the metallic and hollow character usually associated with talking machine reproduction is eliminated.
>
> Diaphragms may be made according to this invention, of any suitable elastic material, such as *paper,* (which may be varnished if desired), card, celluloid, metal, or the like, and the surface, or surfaces, of the diaphragm, or elements composing the vibrating body, may be put under tension by any suitable means." (R. pp. 357-358.)

The part marked "11" of *Patent 986,477* can not in any wise be considered as a horn. It serves a purpose similar to the baffle board or cabinet used in conjunction with defendant's loud speaker. It is described as follows in the Lumiere specification:

> "While I have shown a small trumpet 11 in connection with the constructions which I have illustrated, it is to be understood that the trumpet may be entirely dispensed with if desired, the function being to give direction to the sound waves rather than to increase the volume of the sound reproduced by the diaphragm" (R. p. 362).

So far as concerns the pleats in the Lumiere structure, they might well be disregarded in making a comparison with the disclosure of the Hopkins patents, since Hopkins in his specification suggests that his diaphragm might be benefited by impressing into it radial corrugations. Obviously, from the manufacturer's standpoint, such radial pleats or corrugations do not lend themselves readily to economy of construction, hence the explanation why the developments commercially have been along the line of a perfectly smooth cone. The Appellate Court in the *Rola* case (34 F. (2d) 764, 769) said concerning the Lumiere device:

> "While the appearance of the appellants' device is quite dissimilar from that of Lumiere the general principles of both would seem to be the same. Lumiere gets uniform vibration and large surface by tension and by fluting the paper diaphragm, and Hopkins gets both as does Starling and Cole by increasing the altitude of the cone. * * * The pleating gives strength in the direction of the application of the vibrations, which is achieved by Hopkins by greater altitude of the cone. The Victor Talking Machine Company manufactured and sold about 40,000 of these Lumiere diaphragms. In the above quotations from Hopkins' patent it will be observed that he speaks of a corrugated cone, and he might with equal accuracy have referred to a fluted cone as the equivalent of his uniform surface cone.

The Lumiere device presents the idea of a diaphragm of large surface generating a self propagating sound wave, attached to a rigid frame. This device was operated at the trial as a radio loud speaker." (Lektophone Litigation, p. 96.)

(e) *French patent to Ader, 127,180, October 28, 1878* (R. p. 465):

This patent discloses a diaphragm of large diameter fastened at its rim somewhat after the manner of a banjo-head, and it is vibrated by means of an electrically actuated unit. The specification states:

"A diaphragm of large surface of about 40 centimeters in diameter gives strong sounds but a little confused; a diaphragm of smaller diameter, about 3, 4 or 5 centimeters gives very distinct sounds but less strong; the average diaphragms of *10 to 20 centimeters diameter* are those which operate the best" (R. p. 467).

Small Conical Diaphragms with Yielding or Flexible Rims Rigidly Held at the Periphery:

(f) *Edison 963,362, July 5, 1910* (R. p. 345):

This shows in Figure 2 especially, a conical diaphragm having a *yielding* peripheral portion secured to the supporting frame 13. In his specification Mr. Edison says:

"Since the diaphragm can vibrate only to and fro as a rigid body, like a piston, any yielding is necessarily confined to and takes place entirely within the small free portion of the ring 2, extending between the diaphragm and the cement which holds the ring in place. *This yielding section* can have no audible local disturbing tone; and hence, all of its

> movements, as well as those of the diaphragm, are forced, and the recorder is, therefore, caused to accurately follow the sound waves" (R. p. 349).

The "ring 2" which Edison states can have "*no audible local disturbing action*" is said in the specifications to be preferably of "*soft rubber*" and acts "*as a hinge*" (R. p. 348).

In this connection, it will be remembered that Hopkins was working for Edison, and, presumably, there was available to him not only this patent, but the result of all of Edison's experiments which led up to it.

(g) *Johnson, 1,180,401, patented April 25, 1916,* on an application filed *February 16, 1912* (R. p. 394):

This likewise shows a rigid, conical diaphragm with a rim of a flexible material, said rim being intended to be secured to a rigid support of the open or enclosed type and *with or without a horn.* The inventor says:

> "Generally stated, the form of this invention hereinafter described provides a flat, annular, *vibratory flange,* to which is secured a bulged or *conical* substantially inflexible major portion adapted to reciprocate as a whole within the engaged peripheral edge of said annular flange." (R. p. 395.)

The Johnson patent is directly in point. The object of the invention is stated therein as follows (R. p. 394):

> "The principal object of this invention is, to provide a diaphragm that will readily respond to the most delicate and rapid vibrations, and accurately record and reproduce all of the high and low tones and the included range with equal clearness and with substantially *the same intensity as the original sounds.*"

This clearly is an exposition of the theory which Mr. Hopkins is advancing *at the present time* in connection with the device of his patent, and illustrates the fact that the mode of operation of the small conical diaphragm mounted within a sound-box is the same as that claimed for the Hopkins device, and that the results attained differ only in degree, if at all, from those of the larger cones employing no horns or sound-boxes.

The Johnson patent shows a diaphragm with a conical portion 50 (fig. 22) and an annular portion 30 surrounding the base of the conical portion of "sheet material, such as mica, isinglass, celluloid, paper, and similar materials." The annular portion is formed separately from the conical portion but the two are secured together by an intermediate thin membrane 52. The annular portion is intended to be mounted in a sound box *but the character of the sound box is not mentioned nor is any mention made as to the size of the diaphragm or that it is intended to be used with a horn.* The character of the sound box in which the Johnson diaphragm is used might well be one "*of ten inches or more in diameter*", such as shown in the Lumiere Patents Nos. 986,477 and 1,036,529, comprising radial arms 13 and clamping rings 9 and 10. Such a structure may properly be termed a sound box, and in fact Lumiere throughout his patent refers to it as a sound box. See, for example, R. 364, and Claims 2, 5 (R. p. 374) and 26 to 30 (R. pp. 377 and 378, respectively) of Lumiere No. 1,036,529. No ingenuity whatever would be required to mount the Johnson diaphragm in the Lumiere *open type hornless sound box*, and such transfer would meet the Hopkins asserted combination in every respect except that in Hopkins the annular rim is *integral* with the conical portion, whereas in Johnson the annular rim is separately formed but adhesively attached to the conical portion *just as in defendant's device.* Claim 4 of Johnson precisely describes defendant's conical diaphragm and annulus.

(h) *Stroh, British Patent No. 3393, of 1901* (R. p. 428):

Stroh shows and describes a conical diaphragm with a flat or corrugated rim held in place between rigid clamping rings.

The inventor thus describes the device:

> "The present invention has for its object, to increase the efficiency and uniformity of the vibrations, and thereby to increase the quality of the sounds, or the accuracy of their reproduction. For this purpose I make the centre of the diaphragm rigid by giving it the *shape of a cone* having its apex at the point where vibrations are imparted to the diaphragm or transmitted by the same, while the annular portion between the base of the cone and the edge of the diaphragm may be flat or corrugated, the number and depth of the corrugations depending on the nature of the diaphragm and on the effect desired. When the vibrations are imparted to the diaphragm from the centre, the conical part will move up and down *as a whole,* without materially altering its shape, while the corrugated part *yields* to each movement of the cone, and as the cone occupies preferably about *two-thirds* of the diameter of the diaphragm, *a larger stratum of air* will be set in motion, or the vibrations will be more uniform than in the case of a flat diaphragm. The concentric corrugations of the rim facilitate the motion of the cone in the direction of its axis, while *preventing or impeding vibrations* in any other direction, which accidental or irregular vibrations are supposed to be the *cause of impure sounds.* The diaphragm may be made of metal, ebonite, celluloid, or other suitable material, and the most suitable thickness should be ascertained by experiments." (R. p. 429.)

It will be noted that this diaphragm was intended to be used not alone with the small sound-boxes of phonographs,

but in connection with violins or other stringed instruments, such as shown in the earlier *Stroh patent, British 9418 of 1899* (R. p. 423), and that a complete disclosure is made as to how to move the cone bodily and at the same time prevent or impede any other vibrations at the rim which would be the cause of peculiar sounds such as the weaving or blasting effect which has been attributed to the Starling and Cole device.

The record shows that the Stroh diaphragm was commercially developed in connection with a violin fitted with a trumpet, or directional baffle. The witness Sooy at R. p. 44 testified that during the years 1903 and 1904 they were used commercially by Victor Company for making records of violin music. One of these devices is in evidence as Plaintiff's Exhibit 33.

(i) *Brown, U. S. 1,096,676, May 12, 1914*, filed March 27, 1911 (R. p. 387) and corresponding *British Patent, 29,833, December 22, 1910.*

This shows a magnetically actuated conical diaphragm having a flat rim portion secured to a supporting casing. The inventor says:

> "The diaphragm is so arranged as to be free to *move as a whole,* that is to say all points on its surface vibrate equally, and to insure this action the periphery of the diaphragm is either quite free or is attached to the usual casing by a mere thin ring of *flexible material.*" (R. p. 390.)

Here again we are not dealing with a mere paper patent. Brown's devices were placed upon the market extensively,

being referred to by plaintiff's witness Farrand at R. p. 102, as something that had been on the market for a number of years.

It is also important to note that the Brown specification says:

> "Where it is desired to make the sounds travel out into the room, *a receiver of larger size is preferable.*" (R. p. 390.)

Concerning the Brown patent the Circuit Court of Appeals in the *Rola* case (34 F. (2d) 764, 771), said:

> "So far as the case at bar is concerned, the notable teachings of the Brown patent are (1) a light conical diaphragm, (2) connected at its apex with the stylus or source of vibratory power, (3) connected by a plane annulus with a stationary ring or side of the device, (4) permitting the cone to vibrate as freely as possible in the direction of its axis, (5) the ring to act as a buffer between the waves generated by the front and back portions of the conical diaphragm, (6) that the cone be of extremely light material. It differs most notably in size from the devices of the parties hereto, but its function is the same—to reproduce sound—and as has been pointed out it differs in the material of the annulus. The *notable feature of this patent so far as the case at bar is concerned is the emphasis placed by the inventor, upon the annulus connection of the diaphragm and its function.* The cone was not new in the art, neither was the idea of the cone connected at the periphery of its base by a resilient 'flange.' Brown's effort was to decrease the weight of the cone and to decrease the resistance of the flange or rim to the free vibrations of the cone." (Lektophone Litigation, p. 100.)

Anticipation and Lack of Invention:

It thus appears from the foregoing that *conical diaphragms*—tympana—made of "crisp", "strong", "light", "vibratile" material, with *yielding* or flexible annular rims rigidly supported at the periphery, were old in sound boxes and telephone receivers and transmitters and, in the latter, were used in *free and unconfined air.* The use of a *large paper* cone of approximately the same diameter at its base as the patent specifies, was old as a diaphragm for a phonograph.[24] Diaphragms, acting as loud speakers in free and unconfined air, made of paper as well as other materials, and of large area (exceeding that specified in the patent) with their edges rigidly held were likewise old.[25] Even in the old mechanical telephone art, Maxwell taught the same thing.

How then did it involve invention to merely increase the size of the conical diaphragms with the flexible annular rims of the telephone and sound box art to the size which the other patents and publications had taught was necessary for a diaphragm which was to be used in connection with a phonograph in free and unconfined air. It will be borne in mind that the device of the patent in suit was designed for use with a phonograph.

It is apparent that the argument of plaintiff that there is anything patentable in supplying a yielding rim for a large size conical diaphragm and then mounting this yielding rim in a rigid frame or support to afford a "three-element combination" is unsound. From the prior art that has been cited here, the veriest tyro would instantly see that a cone will not readily flex since it is built like an arch, and, therefore, if it is to move at all, which it must in order

[24] Starling & Cole, R. p. 470.
[25] Ader and Lumiere, R. pp. 465, 352.

to set up sound vibrations, there must be an allowance for such movement by way of a yielding rim. Early phonograph experimenters like Edison, Johnson, English, *et al.*, taught this very clearly and provided yielding rims and rigid supports therefor. Since there must be a movement of a diaphragm to set up sound waves, there is no other way to accomplish this with an inflexible conical diaphragm, except by a certain lack of restraint in the bodily movement of the cone supplied by a yielding rim, and such a rim can yield only if and when anchored in a rigid frame or support.

It did not require the suggestions of an itinerant patent solicitor like Hopkins to inform the acoustic art that the larger the diaphragm and the greater the power that is actuating the diaphragm, the louder will be the sounds.

Obviously, to borrow a feature from one branch of the art and apply it to the other is not invention.

Rather it is what this Court has frequently designated "is but the display of the expected skill of the calling."

> *Hollister* v. *Benedict*, 113 U. S. 59;
> *Vandenburgh* v. *Trucson Steel Co.*, 261 U. S. 6;
> *Concrete Appliances Co.* v. *Gomery*, 269 U. S. 177.

The contention of plaintiff that the principles of construction employed in connection with these so-called "sound-box and horn" type of receivers are not applicable to the larger types of diaphragm not using a sound-box or horn, is not supported by the evidence. *All are acoustic devices or sound-regenerating machines, and the principles of one apply to the other.*

Judge Hickenlooper considered this question in *Lektophone* v. *Crosley* (Lektophone Litigation, p. 61) (not reported), as follows:

> "The arts of sound box and amplifying horn, on the one hand, and of sounding boards or diaphragms operating in unconfined air, on the other, cannot be considered as wholly independent and distinct of each other. Both lie in the domain of acoustics and both involve the same principles of reproduction of pure sound. It is the vibration of the diaphragm in each which produces the sound waves and diaphragms of larger dimension may be constructed with sound box and amplifying horn or those of smaller dimension operated in unconfined free air with smaller volume of sound, it is true, but with good quality. Telephone receiving instruments, while classified by counsel as in the sound box art, operate upon unconfined air in an acoustic sense. In the case of both the same fundamental principles apply" ("Lektophone Litigation," p. 65).

It will be borne in mind that the Hopkins patent was not the result of any effort to supply a need to the radio art, but it has been brought over from the phonograph art in an effort to dominate the radio art. Because of the character of his work, and the time the alleged invention was made, he could not have hoped to supply any demand for anything needed in the radio art. Therefore, no finding of invention can be predicated on the idea that Hopkins solved a problem in the radio art, which was demanding solution, namely, a loud speaker other than the sound box and horn. In addition, the sound box and horn is still retained in the Victor Talking Machine today.[26]

The statement in petitioner's brief (p. 16) that by Hopkins' so-called three-element combination there was attained "an object which had engaged the attention of inventors and patentees for many years", is not supported by the evidence. On the contrary, as before shown, the so-called

[26] R. pp. 40-43.

three-element combination diaphragm for regenerating sound was old. In its old environment, it operated in the same way and produced the same result as is claimed for the Hopkins device. All the elements in the old art performed *in combination* exactly the same function as it is claimed they perform in Hopkins.

Nor can invention be found in this case from commercial success.

Several loud speaker manufacturers took licenses under the Lektophone Company patents, in which were included the Hopkins patents. Some of these concerns became licensees only after suits were filed against them. The testimony on this point given by plaintiff's witness, Mr. Farrand, at R. p. 129, shows that some thirty suits for infringement had been filed prior to the trial of this case (R. p. 87). The Court of Appeals in this case very properly pointed out (34 F. (2d) 764, 772):

> "The appellant has never manufactured a radio loud speaker. The first radio loud speaker of the cone type was made in 1921 by Mr. Ferrand, a licensee of the appellant, and now a stockholder in the appellant corporation, 'after several years experiment.' If the Hopkins patent was a basic and generic patent, on the form and use of a large diaphragm or soundingboard to produce self-sustaining sound waves, this great production would be strong evidence of its utility, and consequently of his invention, but the evidence here simply indicates that the appellant has been remarkably successful in levying tribute upon a new and rapidly extending art. He has succeeded in asserting a monopoly in a new field, not in contemplation at all by the patentee when he made his invention. We cannot see that this success is as persuasive as such evidence sometimes is, as to the exercise of the inventive faculty. *The appellant*

> *has been active in asserting its alleged monopoly, and has thus, no doubt, forced many to buy their peace in a situation so full of doubt, confronted by such dire penalties, as are involved in unsuccessful patent litigation.''* (R. p. 130.) (Lektophone Litigation, pp. 104-105.)

It is important to note that no device corresponding even remotely to Hopkins' disclosure has ever been manufactured commercially and no model thereof has been offered in evidence by the plaintiff.

Thus, the patentee Hopkins testified:

> "Q. And the Lektophone Corporation never did any actual manufacture, either of phonographs or loudspeakers, did it?
>
> A. No, I think it confined its efforts to experiments." (R. pp. 77-78.)

(c) Claims 4 and 8 are Void for Indefiniteness and as Claims for a Result:

(a) These two claims come precisely within the rule and condemnation applied by this Court in *Minerals Separation* v. *Hyde,* 242 U. S. 261. In that case certain of the claims called for the use of an oil amounting to "a fraction of 1% on the ore," while other of the claims called for a "small quantity of oil." The Supreme Court, while finding the former group of claims valid, found the latter group invalid, saying (p. 271):

> "While we thus find in favor of the validity of the patent, we cannot agree with the District Court in regarding it valid as to all of the claims in suit. As we have pointed out in this opinion, there were many investigators at work in this field to which the process in suit relates when the patentees came into it;

> and it was while engaged in study of prior kindred processes that their discovery was made. While the evidence in the case makes it clear that they discovered the final step which converted experiment into solution, 'turned failure into success', (*The Barbed Wire Patent* [Washburn & M. Mfg. Co. v. Beat Em All Barbed Wire Co.], 143 U. S. 275, 36 L. ed. 154, 12 Sup. Ct. Rep. 443, 450), yet the investigations preceding were so informing that this final step was not a long one, and the patent must be confined to the results obtained by the use of oil within the proportions often described in the testimony and in the claims of the patent as 'critical proportions,' 'amounting to a fraction of 1 per cent on the ore,' and therefore the decree of this court will be that the patent is valid as to claims Nos. 1, 2, 3, 5, 6, 7, and 12, and that the defendant infringed these claims, but that it is invalid as to claims 9, 10, and 11."

Plaintiff attempts to distinguish this case from the present case by arguing that in the *Minerals Separation* case "the new mode of operation and effect did not begin until the oil had been reduced to at least a fraction of 1% on the ore." However, the same patent was subsequently before this Court in *Minerals Separation* v. *Butte*, 250 U. S. 336. A reading of the trial court's opinion in that case (245 Fed. 577) shows clearly that the mode of operation and effect, to wit, "frothing", took place when percentages of oil *greater* than 1% were used. Therefore the trial court found infringement.

Notwithstanding this fact, the Supreme Court in the *Butte* held as a matter of law that it was necessary to place a definite and fixed limitation on the claims in the light of the specification, and that the broad interpretation contended for by plaintiff should be rejected, for the following reasons:

> "To give such a construction to the patent would subordinate the clear description contained in it of what are oils of the process, *to an implied and vague description* and classification which would leave the whole subject again at large, to become a field for further experimentation, without definition in the patent of what oils or froths would satisfy it. So interpreted the patent could not reasonably be said to contain a disclosure of the discovered process in the 'full, clear, concise, and exact terms' required by law (Rev. Stat. Sec. 4888, Comp. Stat. 1916, Sec. 9432, 7 Fed. Stat. Anno. 2d ed. p. 145), and the claims might conceivably be said to fall short of 'particularly point out and distinctly claiming' any discovery at all within the meaning of the act of Congress." (250 U. S. 350.)

Section 4888 R. S. requires that the patentee

> "point out and distinctly claim the part, improvement, or combination which he claims as his invention or discovery."

It is a settled rule of law that claims which are ambiguous and uncertain in their meaning are invalid.

> *Carlton* v. *Bokee,* 84 U. S. 463;
> *Marchand* v. *Emden,* 132 U. S. 195;
> *Merrill* v. *Yeomans,* 94 U. S. 568.

(b) The expression in Claim 4 (R. p. 140),

> "the tympanum being of sufficient area to impart to the surrounding free air, when vibrated, sound waves substantially corresponding in intensity to the original sound waves,"

obviously has no meaning in connection with a radio loud speaker where vacuum tube amplifiers are employed and the faintest signal can be reproduced with extreme loudness.

Likewise, the expression in Claim 8 (R. p. 141),

> "being of sufficient area to produce self-sustaining sound waves in the surrounding air when vibrated"

has no significance in connection with loud speakers where amplifiers are used. Defendant's witnesses concede this. (Hazeltine, R. p. 100; Farrand, R. p. 82; and Hopkins, R. p. 80.)

That claims for a function or result are invalid has been emphasized recently by this court in *Holland Furniture Co.* v. *Perkins Glue Co.*, 277 U. S. 245, 257.

Therein the Court holds that a patentee whose specification disclosed a particular mode of treatment of a specified starchy material whereby a glue similar to animal glue is produced, even though he be the first to accomplish that result, could not legally claim any and all starch glues having the functions or properties of an animal glue, for the reason that:

> "A claim so broad, if allowed, would operate to enable the inventor who has discovered that a defined type of starch answers the required purpose to exclude others from all other types of starch and so foreclose efforts to discover other and better types. The patent monopoly would thus be extended beyond the discovery and would discourage rather than promote invention. *The Incandescent Lamp Patent, supra* (159 U. S. 465) 476. *That the patentee may not by claiming a patent on the result or function of a machine extend his patent to devices or mechanisms not described in the patent is well understood*" (citing many Supreme Court cases).

This is exactly what the plaintiff is attempting to do through its interpretation of claims 4 and 8. It would have this court construe those claims as though they were dis-

associated from the specification and were unlimited as to the size, material, construction or actuating force of the tympanum so long as its function or result is to reproduce self sustaining sound waves or sound waves corresponding in intensity to the original sound waves.

In claims 4 and 8 an attempt is made to claim a conical tympanum, without regard to size, which tympanum will reproduce self-sustaining sound-waves, or sound-waves corresponding in intensity to the original sound-waves, without reference to the particular form of actuating force. This is but an attempt to claim a function or result and to cover a new industry which according to the admissions of Hopkins he was not "sufficient of a prophet to foresee" (R. p. 78).

II.

THE CONSTRUCTION WHICH THE CIRCUIT COURT OF APPEALS FOR THE THIRD CIRCUIT HAS GIVEN THE PATENT IN RESPECT TO THE ANNULAR RIM, IS UNJUSTIFIED BY THE SPECIFICATIONS, BY THE CLAIMS AND BY THE PATENT OFFICE PROCEEDINGS; AND IT IS OPPOSED TO THE WEIGHT OF THE AMERICAN AND ENGLISH AUTHORITIES; THE SAME IS ALSO TRUE IF THE DECISION BE UNDERSTOOD, AS PLAINTIFF CONTENDS, TO HOLD THAT A TYMPANUM, THE VIBRATILE PORTION OF WHICH IS LESS THAN 9 INCHES AT ITS BASE, IS COVERED BY THE PATENT. IN ADDITION, NO ENGLISH OR AMERICAN COURT, OUTSIDE OF THE THIRD CIRCUIT, HAS ADOPTED THAT VIEW.

The plaintiff contends that the decision of the Circuit Court of Appeals for the Third Circuit brings within the scope of the patent not only any device with any kind of a flexible connecting means between the cone and the loud speaker support, irrespective of whether it is of "crisp," "vibratile material" and a part of the tympanum or not,

but also devices having tympana of less than 9 inches at their base, providing that they are of relatively large area compared with those used in sound boxes. As we will point out directly, we do not think that it was ever intended by the Circuit Court of Appeals for the Third Circuit to accede to this latter proposition.

(a) A reading of the opinion of Judge Buffington shows that the Circuit Court of Appeals for the Third Circuit was principally concerned with the question of *validity,* and gave very little attention to infringement. The only art discussed in his opinion is Lumiere and Starling & Cole. As to the latter, the statement is made in the opinion that, while they showed a conical shaped sounding board, it was "of such smaller size that it was considered *a mere plaything.*" Far from being so small that it was considered a mere plaything, the article shows that the cone was to have, as a rough estimate, a base of at least 8 inches, *only one inch less than that of Hopkins.*

Again the Court, in *Brandes* case, said:

> "Now it seems to us that Hopkins was the first to point out that this blasting effect, caused by the local vibrations at the edge of the cone, would be prevented and the cone held restricted to vibrations as a whole, and the weaving prevented, by the expedient of using a rigid frame and making a liaison between the edges of the cone and the clamp of the rigid frame by a flexible yielding liaison belt, which vented and thereby prevented the obnoxious fluttering of a cone's edges not rigidly held."

Nowhere in the Hopkins specifications is any reference made to weaving or blasting of the edges of the cone, and nowhere is any reference made to the "flexible yielding liaison belt." What Hopkins shows and described is a so-called "tympanum"

> "of crisp, strong material, having considerable rigidity within itself" (R. p. 138);

and that

> "If satisfactory regeneration of sounds * * * is to be had, the whole diameter of the tympanum * * * should exceed nine inches" (R. p. 137).

Obviously, the "tympanum" includes the so-called "plane peripheral portion", for the Hopkins specification says:

> "A tympanum L, of *light, vibratile* material has an annular plane peripheral portion l, the outer edge of which peripheral portion or supporting rim l is tightly gripped and rigidly supported between the ponderous rings K and K′, and a central conical portion l′ rising from the inner edge of the annular plane peripheral portion" (R. p. 146).

Moreover, there is no justification under the present record for crediting Hopkins with any discovery of a "flexible, yielding liaison belt," or any new theory as to "blasting." The prior art as presented here makes any such conclusion impossible. As pointed out by Judge Hickenlooper in the *Crosley* case:[27]

> "Even if the Hopkins patent can be read as teaching that the base of the cone must be restrained against weaving, fluttering or forming loops and nodes, in order to produce a satisfactory result, Hopkins was not the first to so teach. This teaching is clearly disclosed by Stroh (British Patent No. 3,392—1901) and the practice of so restraining the base of the conical portion of the diaphragm was employed and the subject of patent publication by English, Brown and others, including Lumiere, without de-

[27] Lektophone Litigation, p. 68.

> tailed reference to the function of such annulus or plane rim. We cannot concur in the apparent opinion of the Court of Appeals of the Third Circuit (Brandes Case) that 'Hopkins was the first to point out that this blasting effect, caused by local vibrations at the edge of the cone, would be prevented and the cone restricted to vibrations as a whole, and weaving prevented by the expedient of using a rigid frame and making the liaison between the edges of the cone and the clamp of the rigid frame by a flexible yielding liaison belt.' Stroh specifically taught this but not Hopkins."

Dann and Lapp was not before Judge Hickenlooper, and it was not before the Circuit Court of Appeals for the 3rd Circuit.

The Court of Appeals, for the Third Circuit, also makes the assertion that the Lumiere Patents attained no position in the practical art.

The record in the present case shows that some 40,000 of these Lumiere devices were actually manufactured and sold by the Victor Company[28] up to the time that the witness McEwan testified, several years ago. The record also shows that the Lumiere device was being manufactured in France as early as 1908 or 1909.[29]

Neither does the opinion of Judge Buffington show that the Circuit Court of Appeals for the Third Circuit took any note of the statements in the specifications of the patent that the *tympanum,* which is the subject matter of every claim of the patent, was to be "rigidly supported at its periphery", and was to be constructed of "light, vibratile material",[30] or, as is otherwise expressed in the specifications "it is of vital importance that the *tympanum* be made

[28] R. p. 41.
[29] R. p. 37.
[30] R. p. 137.

of crisp, strong material having considerable rigidity within itself".[31] That Court was satisfied, apparently, that the rubber band which the plaintiff claimed was the annular rim of the patent, should prevent "weaving and fluttering of the outer edges of the sounding board". But, as before shown, that function of the annular rim of the patent is nowhere referred to in the patent and was disclosed in many prior patents.

It is apparent from a reading of the patent that the annular rim is to be a part of the tympanum, in the sense that it is to vibrate with the conical part and to create sound. It was expressly so held in the *British* case.[32] This feature is entirely overlooked in Judge Buffington's opinion.

It thus appears that the Court of Appeals for the Third Circuit, in its construction of the patent in suit, has acted on erroneous premises and has overlooked the express teachings of the patent as to the character of the material of which the annular rim is to be made and one of its functions.

One of the essential characteristics which the patentee represented to the Patent Office was of the *essence* of his invention, namely, the dimensions of the tympanum, is passed over by the Court, with the statement

> "While the form of the Hopkins circular cone is not precisely duplicated by defendant's elongated oval cone, yet in *area* and sound function is appropriated and reproduced."

In the *Brandes* case there were two loudspeakers which it was claimed infringed. The testimony in this case shows

---

[31] It is argued in petitioner's brief that when the patentee used the last above quoted words, he referred only to the conical portion. But that is opposed to the above quoted patent definition of the "tympanum". This will be more fully described in the part of this brief which is devoted to a discussion of the question of infringement.

[32] Lektophone Litigation, p. 201.

that one of the Brandes diaphragms had an overall diameter of 8⅞", the conical portion of which was 7-15/16". The other one had an overall diameter greater than 9". The question of size apparently was not urged in that case, owing, doubtless, to the fact that it was a defense only as to a part of defendant's manufacture, and consequently, little, if any, note was taken of it by the Court of Appeals.

That Court has treated the patent as a pioneer entitled to a wide range of equivalents and has accepted, as the true measure of Hopkins' contribution, not what the patent taught, but what counsel, in the light of the prior art, has attempted to attribute to the patent.

How can it possibly be held that Hopkins stands in the position of a pioneer, when every element of his so-called three-element combination was old *in combination*, and when the prior art taught in addition that if sounds were to be regenerated in free air without the use of a sound box, a large diaphragm of from 8 to 10 or more inches was desirable?

(b) With the possible exception of the early decision of Judge Campbell in the *Sylo* case (which was reversed) and the recent decision of Judge Galston in the Eastern District of New York, *Lektophone* v. *Colonial Radio Corporation* [33] and the Courts in the Third Circuit, which have followed the Circuit Court of Appeals of that Circuit, every other Court has refused to give the patent in suit any such breadth of construction as the plaintiff contends for; but, on the other hand, have held it to be *restricted* by its specifications, claims, patent office proceedings, and the prior art.

In considering the decisions of Judge Campbell and Judge Galston, it must be borne in mind that the conical

[33] Lektophone Litigation, p. 112.

part of the loud speaker which was before the Court in the *Sylo* case had a diameter at its base in excess of 9", and although the character of the device before Judge Galston in the *Colonial* case is not in evidence, it was apparently of greater diameter than 9", inasmuch the Court found infringement as to all claims, including those which specifically require that the diameter between the rings be greater than 9". These cases, therefore, cannot be considered as authority for the proposition that a loud speaker with a diameter at its base of less than 9" infringes the patent.

In the *Western Electric* case,[34] Judge Thacher said:

> "As I read the claims they were intended to confine the patent to a 'tympanum of novel construction,' and the limitations, therefore, were inserted to *define and limit* the particular *form of construction covered by the patent.* This was necessary in view of the prior art, which disclosed various forms of similar devices upon which the patented device could be regarded at best as only an improvement, and only so because of the method devised for supporting the edges of the vibrating cone by means of a flexible annular rim. Even this device, thus supported, was not novel in sound-box construction, and, therefore, it seems to me *that the patentee is not entitled to a range of equivalents which will prevent others from accomplishing what he accomplished by means other than those expressly covered by his claims, limited as they are to a particular form of mechanical structure".*

When this case came to the Circuit Court of Appeals, Judge Manton, speaking for that Court, said:[35]

> "The appellant's specified way of accomplishing its results, as stated in the claims, left open oppor-

[34] Lektophone Litigation, p. 34.
[35] Lektophone Litigation, p. 41.

tunity for subsequent improvers to freely accomplish the general results *by different means.*"

In the *Crosley* case, Judge Hickenlooper, in a well-considered opinion, where the prior art is fully examined, said:[36]

> "*The form, shape, size, material and proportions were all of the very essence of his invention. The necessity of restricting the edge or base of the cone against deformity was not of the essence because it was old.* The details of shape and dimensions pertained especially to the inventive step rather than to mere environment, were so considered by the patentee and so precisely claimed. *To the size, shape and proportions thus disclosed the patentee is limited by the prior art and the very essence of his invention.*"

He further said:[37]

> "We therefore hold that by the prior art, by the claims as drawn, by the essence and exact nature of the invention as disclosed, and by the estoppel created in the Patent Office proceedings, the patentee here is limited to a diaphragm having the annular rim, *rigidly held, and to a comparatively narrow range of equivalents.*"

This case is now in the Circuit Court of Appeals awaiting decision.

In the British case, Mr. Justice Tomlin said:[38]

> "*Further, in my opinion the inventor is treating the whole of the diaphragm or tympanum as the sound producing body. The tympanum as a whole, that is to say, including both its conical part and its*

[36] Lektophone Litigation, pp. 68-69.
[37] Lektophone Litigation, p. 71.
[38] Lektophone Litigation, p. 201.

annular part, is to have a diameter exceeding 9 inches, and is to be *light and have* the minimum of inertia consistent with *the necessary rigidity.* The phrase, 'the conical active portion of the tympanum' does not, in my judgment, imply that the cone is the sole sound producing medium, but only indicates that it is through the cone that the vibrations are actively conveyed to the tympanum as a whole. The inventor is treating a plane surfaced diaphragm as the ideal, and is seeking a compromise by coning only so much of it as is necessary to give him the rigidity required, and he suggests a suitable proportion between conical and annular parts.

The conical and annular parts are, I think, *to be of one and the same material,* and of such stiffness and *area that the annular portion when 'tightly gripped' at its outer edge by the ponderous rings will be sufficiently rigid to support the diaphragm or tympanum as a whole,* and sufficiently flexible and springy at once to permit and take up the vibrations of the cone to resist the displacement of the cone in the degree necessary to maintain its form and to enable it to return to its normal position after the cesser of the vibrations."

He further said:[39]

"Now I am satisfied upon the evidence that it makes no substantial difference to the functioning of the Mascot cone whether the ring of thin paper is round the edge of the cone or not. That ring of paper operates to cut off the air between the back and front and to afford some slight protection to the cone when the instrument is being handled or moved. It does not in my judgment either mechanically or functionally correspond with the annulus in Hopkins. The diaphragm in the Mascot is the cone and the cone alone, and *the edges of the cone are not clamped,*

[39] Lektophone Litigation, p. 211.

> and such constraint as is exercised on those edges by the thin paper ring is negligible. Whatever be the true construction of the specification of the patent in suit, I think that there is no infringement by the Mascot."

Of course, the opinions of the courts below, in the case at bar, give to the patent the same narrow construction that other courts have given to it. Judge Wilbur, speaking for the Court of Appeals, concluded his opinion as follows:[40]

> "We must either hold that the appellant's device is void for lack of invention or that he is so narrowly confined by the specified dimensions and claims of his patent that the smaller device of the appellee, with its limp leather annulus, does not infringe. It is sufficient for the purpose of this case to follow the latter course, as the trial judge did."

A reading of the opinions of Judge Bourquin and Judge Wilbur in the case at bar will demonstrate, we think, that these courts reached their conclusions by a careful consideration of the prior art and the limitations imposed by the specifications, claims, and patent office proceedings of the patent in suit, factors which the Appellate Court in the *Brandes* case apparently overlooked, or about which it was not sufficiently informed.

In *Eibel Process Co.* v. *Minnesota & Ontario Paper Co.*, 261 U. S. 45, 63, *a case relied upon by plaintiff*, Mr. Chief Justice Taft, in delivering the opinion of the Court said:

> "In administering the patent law the court first looks into the art to find what the real merit of the alleged discovery or invention is, and whether it has advanced the art substantially. If it has done so,

[40] Lektophone Litigation, p. 107.

> then the court is liberal in its construction of the patent, to secure to the inventor the reward he deserves. *If what he has done works only a slight step forward, and that which he says is a discovery is on the border line between mere mechanical change and real invention,* then his patent, if sustained, will be given a *narrow* scope, and *infringement will be found only in approximate copies of the new device.*"

We submit that the Courts in the case at bar, have adhered to this rule far more faithfully than did the Circuit Court of Appeals for the Third Circuit.

III.

THE ROLA LOUD SPEAKER DOES NOT INFRINGE.

Preliminarily to the discussion of infringement we would direct the Court's attention to two circumstances that cannot be overlooked: (a) the fact that the patent in suit deals with problems peculiar to phonographs; and (b) that Hopkins entered a field of sound reproduction which was already crowded, and his invention, if any, therefore, was of a minor degree.

As was said by Mr. Justice Tomlin in the *British* case:

> "In 1913, at the date of the patent in suit, sound regeneration had but a limited field. The only instruments calling for sound regenerating devices were the phonograph and gramophone, in which the movements of a stylus over the record were transmitted mechanically to the diaphragm, the Poulsen device in which a magnetized wire took the place of a record, and electric telephones, including the loud speaking telephone in use on board ship. In all these instruments the power available was small. Broadcasting was unknown, and loud-speakers, as now un-

> derstood, and thermionic valves and electric pick-ups for making high auxiliary power available had not appeared. It was, nevertheless, at that day, as I find, common knowledge that lightness and rigidity of the diaphragm were essential to success in reproducing sound from the instruments then known. I further find that *coning* the diaphragm to attain rigidity was a recognized expedient, and that it was also known that greater loudness could be attained *by enlarging the area of the diaphragm* and thereby moving a greater volume of air'' (Lektophone Litigation, pp. 194-5).

In radio loud speakers, the diaphragm is actuated by an electrically operated unit which affords ample power at all frequencies. The power delivered by such a unit is many times stronger than the power available from the vibration of a needle operating in the sound grooves of a phonograph record, and mechanically connected to the diaphragm. It is by reason of this power available in a radio loud speaker, that a diaphragm can be caused to ''blast,'' but this is not an action that is peculiar to a conical diaphragm. Any diaphragm will ''blast'' upon applying too much power, including those made in accordance with the alleged invention of plaintiff's patent, as well as those made by defendant.[41]

There is a vast difference between the action of imparting the vibrations to the apex of the Hopkins patented cone by means of the phonograph needle and that of applying the power to a diaphragm, or cone, by means of *an electric unit*. It will be at once realized that where only a limited amount of power is available, as in the case of the phonograph needle, it is necessary that the cone be supported independently of the needle, as by the relatively stiff rim *l* of

[41] R. pp. 52-53.

plaintiff's patent; whereas in the case of the electrically operated unit, such as defendant uses, the diaphragm or cone may be supported entirely at its apex, and the limp leather rim does not "maintain the form and neutral position" of the cone.

A similar finding was made in respect to the corresponding British patent (Lektophone Litigation, p. 192), as follows:

> "The view which I have taken of the construction of the specification would be sufficient to dispose of the action as the alleged infringing article is a loudspeaker in the modern sense for use in connection with the reception of broadcasted matter and is not constructed for use on a record and stylus machine, though it can, by means of an electric pick-up, be operated from such a machine" (Lektophone Litigation, p. 204).

This holding was affirmed by the Court of Appeal (Lektophone Litigation, p. 214).

We turn now to the specific differences between the device of the patent and the Rola loud speaker. They are summarized in the Summary of the Argument and will now be discussed more in detail.

(1) In the device of the patent, (a) the area of the tympanum as that word is defined and used by the patentee comprises the entire structure between the apex of the cone and the rings K, K', including the annular rim as well as the cone, (b) the diameter of the tympanum must exceed 9 inches, (c) the entire tympanum is of crisp, vibratile material, and (d) the outer edge of this crisp, vibratile tympanum is rigidly mounted in the rings K.

(2) In the defendant's device, (a) the area of the tympanum comprises only a part and not all of the structure

between the apex and the rings, *i. e.*, only the cone and not the flexible rim, (b) the diameter of the base of the tympanum is materially less than nine inches; *i. e.*, 7 9/16 inches, (c) the flexible rim between the tympanum and the metal frame is neither crisp nor stiff nor vibratile; it is limp kid leather, and (d) the outer edge of the crisp, vibratile tympanum is not rigidly mounted in the metal frame; it is flexibly supported from the metal frame by the limp leather rim.

The Device of the Patent.

(a) In the Device of the Patent, the Area of the Tympanum Comprises the Entire Structure Between the Apex of the Cone and the Rings K, Including the Annular Rim as Well as the Cone.

This seems to us to be plainly established by the patent and the record, yet the plaintiff asserts another meaning for the word "tympanum," namely, as referring in substance only to the conical portion. (See p. 49 of Petitioner's Brief.)

As the word cannot fairly be given one meaning in respect of validity and another in respect of infringement we will make some reference to the patent and to the evidence to demonstrate that by "tympanum" Hopkins meant more than the conical portion and included the whole structure within the aperture of the rings K.

The language of the patent specification supports this statement with perfect clearness (R. 187):

> "*The tympanum L, which forms the subject of the present case,* is constructed of light, vibratile material and *has an annular plane peripheral portion or supporting rim l,* the outer edge of which is tightly gripped, and rigidly supported between the

> rings K, K', *and a central conical portion l'* rising from the inner edge of the said rim *l*. If satisfactory regeneration of sounds from a record or other sound-vibrated element is to be had, *the whole diameter of the tympanum, that is, the diameter of the aperture in rings* the K, K' should exceed nine inches in order that the conditions required to regenerate the sound waves in the manner above described shall be fulfilled. The base of the central conical portion *l'* should exceed in area one-half of *the effective area of the entire tympanum, that is, the area of the* aperature in the rings K, K'.;"

The patentee here explicitly describes the *diameter of the tympanum* as being equal to the *diameter of the aperture in the rings,* and the *effective area of the entire tympanum* as being equal to *the area of the aperture in the rings.*

The patent is expressly directed to "a tympanum of novel construction." (R. p. 164.) If the tympanum of the patent comprised no more than the cone there would be nothing novel about it. Cone-shaped tympana were admittedly old.

If Hopkins did anything, it was to extend the crisp vibratile material of his tympanum beyond the edge of the cone in the form of a flat, annular rim, integral with the cone.

His "tympanum of novel construction" as he plainly describes and claims it, consists of this single element, homogeneous, integral and continuous as to material, but shaped into two portions, the conical portion and the annular rim portion.

It is over and over again repeated in the claims that the tympanum of the patent includes both the cone and the

annular rim. If the rim is not a part of the tympanum then the claims are misdescriptive and do not apply.

Claims 1-3 call for "a tympanum rigidly supported at its periphery." The only rigid support shown in the patent is at the periphery of the annular rim. Hence the rim must be an effective part of the tympanum to respond to the call of the claims.

Moreover, the tympanum is defined in every one of the claims of the patent as having "a conical portion." The cone is thus *only a "portion"* of the Hopkins tympanum.

Claims 4 and 5 call for "a light tympanum * * * having its outer edge rigidly mounted on said support."

Claim 6 calls for "a light, vibratile tympanum * * * having its outer edge secured to said support; said tympanum being shaped to provide an annular rim * * * and a conical portion."

Claim 7 is similar.

Claim 8 describes the tympanum as "embodying a * * * conical portion and an annular rim."

References need not be multiplied. Appellant's witness, Clair L. Farrand, a director of the appellant company, said at page 107 of the Record:

> "I am using the word 'tympanum' as used in the Hopkins patent, meaning *the area enclosed within the rings.*"

(b) The Diameter of the Tympanum Must Exceed Nine Inches.

This limitation is explicitly stated in all but Claims 4 and 8.

In asserting infringement by the substantially smaller Rola device the plaintiff is placed in this dilemma.

Either (a) there is some magic in the nine inch dimension and it is a critical dividing line which brings into effect new and patentable results; or (b), nine inches is only a preferred dimension giving results which differ only in degree from the results of other sizes. If the former is correct, the plaintiff cannot complain if the Courts and the public take the patentee at his word; if the latter, the patent is invalid for uncertainty as well as lack of invention. To support validity, the plaintiff seizes the first horn of this dilemma; to support infringement he drops the first and seizes the second.

As to claims 4 and 8 we believe they are invalid because they fall precisely within the rule in *Minerals Separation* v. *Hyde, supra.* But even assuming that the claims may be saved from uncertainty by reading into them limitations from the specification, it is obvious that the limitations must be based upon the *structure* shown and described, with its essential nine inch or greater diameter, and not, as plaintiff argues, on *results*,—even assuming that results in the radio loud speaker field (which Hopkins never dreamed of at the time of his alleged invention) may be compared with the unproved results of Hopkins' device which was never built, except experimentally.

The phrases qualifying the area of the tympanum in Claims 4 and 8 are not clear unless read in the light of the specification language. "Self-sustaining sound waves" and "sound waves substantially corresponding in intensity to the original sound waves" can admittedly be produced by tympana of widely different areas and of areas far smaller than any contemplated in Hopkins' patent. (R. pp. 80 and 81.) On Hopkins' own admission those expressions do not mean much today as applied to loud speakers (R. p. 80); and they have no meaning in the patent unless limited to

the dimensions specified. This is clear from the specification. It states (R. p. 187):

> "If satisfactory regeneration of sounds from a record or other sound-vibrated element is to be had, the whole diameter of the tympanum, that is, the diameter of the aperture in the rings K, K′ *should exceed nine inches* in order that the conditions required to regenerate the sound waves in the manner above described shall be fulfilled."

Here the patentee definitely associates a minimum of nine inches for the whole diameter of the tympanum with satisfactory regeneration of sound waves "in the manner above described," *i. e.*, "of an intensity and amplitude substantially corresponding to the original sound waves" (R. p. 164.) This is the type of regenerated sound waves referred to in these claims. And if the patent teaches anything in respect of regeneration of such sound waves it is that the "whole diameter of the tympanum, that is the diameter of the aperture in the rings K, K′ should exceed nine inches".

The file wrapper contains repeated representations of fact, made to the Examiner in this regard, and which plainly influenced him to allow claims of the character in question. Thus at R. p. 226:

> "Applicant has practically demonstrated that, to effect direct regeneration from the record of the sounds, a light vibratile tympanum of *substantially 9 inches in diameter or greater* must be employed in order to obtain faithful reproductions."

Again, at page 227:

> "*The dimensions* of the diaphragm and of the conical portion thereof, as set forth in claims 15 to 20 inclusive, *are essential elements* in a direct sound

regenerator, but they are not essential in sound boxes which employ horns or trumpets as do all of the references which have been cited against these claims. This has been demonstrated by the applicant by actual trial."

Again, at page 253:

"We believe that it will now be apparent to the Examiner that the selection of the *particular dimensions is of the essence* of the invention and attains novel results arising from the particular dimensions and such as could not be obtained by the devices shown in the references."

Again, at page 267:

"*It is essential* to the success of applicant's machine that the tympanum be of large area and that the base of the vibratile portion thereof *exceed nine inches* in diameter, and furthermore that the peripheral edge of the tympanum, exterior of the vibratile portion, be rigidly secured or tightly gripped between the rings of the supporting frame. These definitions of the *essential characteristics* of the invention have been included in the claims by the amendments aforesaid, and said claims are, therefore, believed to be allowable."

* * * * * * * *

"Applicant has demonstrated that his invention is not wholly satisfactory when the conical tympanum is made with a basal diameter of less than nine inches."

The file wrapper shows that the applicant went to the extreme of transporting the Patent Office Examiner and his assistants to New York and there demonstrating to them, at the office of his attorneys:

> "that the machine embodying the present invention did reproduce sounds or sound waves substantially corresponding in intensity to the recorded sound waves" (R. p. 268).

It goes without saying that the machine so demonstrated had a tympanum of diameter exceeding nine inches and was a part and parcel of a phonograph.

Plainly there was a meeting of the minds of the applicant, his attorneys and the Patent Office officials at that demonstration that tympanum of nine inches or more diameter was essential in Hopkins' phonograph to produce "self-sustaining sound waves" or "sound waves substantially corresponding in intensity to the original sound waves"; and plainly in allowing such claims as 4 and 8 the Examiner understood them as excluding in fact devices having tympana of less than nine inches diameter, because, in the Hopkins combination, such devices must fall short of the character of sound regeneration called for.

In short, the requirement as to the character of the regenerated sound waves in Claims 4 and 8, while ambiguous and indefinite in itself, is intelligible if and only if the claim language be read in the light of the patent disclosure; and that disclosure plainly teaches that the dividing line between tympana capable of such regeneration and those not so capable is fixed at a minimum diameter of nine inches.

It is urged by plaintiff that if Claims 4 and 8 have read into them the condition that the tympanum exceed nine inches in diameter they will then be identical with other claims in the patent and "the practical effect would be to strike Claims 4 and 8 from the patent."

A reading of the claims, however, will show that Claim 4 differs from each and all of the other claims in respect

to the qualification that the base of the conical portion "exceeds in area one-half of the effective area of the said tympanum." No other claim in the patent contains any such provision. Claim 8 differs from all the other claims in that while it describes the conical portion and annular rim it does not specify any particular proportion as between the conical portion and rim, nor any particular altitude of cone. Therefore, reading into these claims the very point which the Examiner must have had in mind in allowing them, namely, that the diameter of the tympanum shall exceed 9 inches, would in no wise render them identical with the other claims in the patent, and would simply be giving effect to Hopkins' representations made to the Patent Office that it is essential that the base of the vibratile portion exceed 9 inches in diameter. In fact, if such a condition be not read into these claims, then they are void for indefiniteness and uncertainty, as before shown.

The disclosure and teaching of the patent are of a limited invention wherein certain dimensions, shapes, proportions, and materials are of the essence; and the plaintiff attempts to justify an interpretation of the claims broader than the disclosure. There is no authority for any such interpretation:

> *Gates* v. *Fraser*, 153 U. S. 332;
> *I. T. S. Rubber Co.* v. *Essex*, 272 U. S. 429;
> *Jewell Filter* v. *Jackson*, 140 Fed. 340;
> *D'Arcy* v. *Marshall*, 259 Fed. 236.

In the latter case Judge Denison, speaking for the Court of Appeals, Sixth Circuit, said:

> "From a review of these and other familiar cases, we think it is safe to deduce the proposition that where the claim defines an element in terms

> of its form, material, location or function, thereby apparently creating an express limitation, where that limitation pertains to the inventive step rather than to its mere environment, and where it imports *a substantial function* which the patentee *considered of importance to his* invention, the court can not be permitted to say that other forms, which the inventor thus declared not equivalent to what he claimed as his invention, are nevertheless to be treated as equivalent, even though the court may conclude that his actual invention was of a scope which would have permitted the broader equivalency." (At p. 240.)

(c) The Entire Tympanum of Hopkins is of Crisp, Vibratile Material.

The patent discloses a unitary *integral* tympanum, and only such a tympanum. It comprises two portions, the cone and the rim, but the teaching of the patent is that the two portions shall be formed of a single piece, and that the whole shall be of crisp vibratile material.

The patent specification says (R. 187):

> "The tympanum L, which forms the subject of the present case, is constructed of light, *vibratile* material and has an annular plane peripheral portion or supporting rim *l*, the outer edge of which is tightly gripped and rigidly supported between the rings K, K', and a central conical portion *l'* rising from the inner edge of the said rim *l*."

The tympanum L embraces the two elements (1) the "central conical portion *l'*," and (2) the "annular plane peripheral portion or rim *l*." They are two portions of a single, homogeneous whole, and the whole is described as constructed of "light, vibratile material."

In more specifically describing the material of the tympanum, the specification goes on to say (R. p. 187):

> "It is of vital importance that the tympanum be made of crisp, strong material, having considerable rigidity within itself, and it is also of vital importance that the tympanum as a whole be extremely light and have as little inertia as possible without a weakening effect."

Then referring to the shape of the conical portion, the specification proceeds (R. p. 187):

> "The tympanum is shown of conical form with a smooth surface, and this has been found to be very satisfactory. The conical shape is given the tympanum so that shocks or vibrations impressed upon the apex of the cone in a direction toward its base will move the whole cone bodily, the strains being imparted edgewise of the material and no wave motions being set up in the thin material of the cone. The curvature of the walls of the cone precludes the setting up of waves in the material; and the intended object, a simultaneous movement of the whole conical portion of the tympanum, is thus attained."

Immediately following, comes reference to the shape of the annular rim (R. p. 188):

> "While I prefer to construct the tympanum in the form described and shown with a smooth surface, especially in view of the ease of construction, yet it is possible to form radial or concentric corrugations in the plane peripheral portion *l* and produce a light, *stiff* and very satisfactory article for the purpose."

And finally, referring to the tympanum L as a whole, the specification says (R. p. 188):

> "The tympanum should preferably be constructed of a colloidal substance, and should be from 3 to 20 thousandths of an inch in thickness according to the crispness or stiff character of the material used. Compressed fibrous material, such as hot pressed paper or fiber, has been found to act satisfactorily."

There is not the slightest suggestion in the specification or in the claims or in the file wrapper of any form of tympanum other than one that is constructed of homogeneous material throughout both the cone portion and the rim. And the teaching of the patent is that "it is of vital importance" that this unitary tympanum, from the apex of the conical portion to the outer edge of the supporting rim where it "is tightly gripped and rigidly supported between the rings K, K'," "be made of crisp, strong material having considerable rigidity within itself."

Plaintiff contends (brief, p. 48) that when the patent says "that it is of vital importance that the *tympanum* be made of crisp, strong material, having considerable rigidity within itself", that it means the *conical* portion of the tympanum because of the use in the same sentence of the words "tympanum as a whole" etc. This is opposed to the patent's own definition of the tympanum, which is—"an annular plane peripheral portion or supporting rim * * * *and* a central conical portion". It is stated, in the part of the specifications where the tympanum is said to consist of these two elements, that the "tympanum", *not a portion of it,* shall be "of light, *vibratile* material". The patent shows the annular rim is constructed of the same material as the conical portion, and, indeed, a continuation thereof. Furthermore, the reference in the patent to the suggested corrugations in the rim do not support the

idea that the rim is not to be of crisp, strong material, but quite the contrary, because, if the rim were of limp material, such as the leather of the defendant's device or the cloth of the Miller device, no corrugations could be made in it which would produce a "stiff" rim. We submit that, in view of these considerations, it must be held that when the patentee used the words "that the tympanum be made of crisp, strong material" he meant the *whole* tympanum, as the Courts below held, and not merely the conical portion thereof.

In this connection we direct attention to the fact that one of the members of the firm that solicited the patent in suit, together with one Joss, on May 13, 1918, filed an application for a patent which was granted to the plaintiff herein, as assignee in 1921.[42] The specification of this patent contained criticism of the structure such as shown in the Hopkins patents and states:

> "The object of the present invention is to improve a diaphragm of this character, by so constructing it as to reduce to a very large degree, if not entirely, the possible distortion of the vibrations transmitted to or imparted by, the diaphragm, *due, in part, to the direct and rather rigid connection of the base of the cone to the supporting rim or flange* (which has the effect of somewhat damping the vibrations), and, in part, to the cone base itself, which may, perhaps, exert a similar action, but in less degree, by reason of such connection. This object is effected by avoiding *the direct connection just referred to*, and, instead, joining the base of the cone to the supporting rim or flange by a curved, open-topped trough, which provides a *resilient mounting* for the cone and is constructed and arranged in such a way as to destroy distortive action due to the pres-

[42] R. p. 477.

ence of the rim and at the same time to resiliently support the cone itself." (R. p. 477.)

It thus appears that Hopkins, according to admissions of his associates, attorneys, and assignee, made five years after the filing date of Hopkins, had in contemplation a direct and rather rigid, resonant connection between the cone and supporting rings, and that when Davis and Joss attempted to construct one of the Hopkins devices they found it necessary to make such changes in the rim of the cone as to lead them to believe that they had made a new and important discovery which justified a patent, when they provided a less rigid flange or base for the cone.

(d) The Outer Edge of this Crisp, Vibratile Tympanum is Rigidly Mounted in the Rings K.

This point needs no exposition. Every one of the claims of the patent introduces it in one form or another.

Claims 1, 2 and 3 call for "a tympanum *rigidly supported* at its periphery."

Claim 4 calls for "a tympanum support having a circular aperture, and a light tympanum freely exposed to unconfined air and having its outer edge *rigidly mounted* on said support in said aperture;"

Claim 5 calls for "a light vibratile tympanum exceeding nine inches in diameter, having its outer edge *rigidly mounted* on said support."

Claim 7 calls for the support, and a tympanum "having its outer edge *rigidly secured* to said support."

The same thought by inference appears in Claim 6.

Claim 8 calls for "a tympanum embodying a bodily movable, central conical portion, and an annular rim which encircles said conical portion and which is *rigidly supported*".

The Defendant's Device.

(a) In Rola, the Effective Area of the Tympanum Comprises Only a Part and Not All of the Structure Between the Apex and the Rings, i. e., Only the Cone and Not the Flexible Rim.

The paper cone of the Rola structure is the only part which functions as a tympanum.

According to the *Encyclopedia Brittanica,* the word "tympanum" comes from Greek roots meaning "to strike." By the Romans it was used to designate a kettle drum. Its modern meaning probably extends to vibratile sounding boards of light, stiff material whereby mechanical vibrations are transformed into sound waves over a relatively broad front; *i. e.,* a sound generating diaphragm.

Only the cone proper of the Rola device constitutes a true tympanum.

The limp kid leather rim is neither "crisp" nor "stiff." It has little or no "rigidity within itself." It is not appreciably "vibratile," it does not produce audible sounds and it functions as a sound *deadener* rather than a *generator.*

Defendant's witness, Tenny, said of it (R. p. 49):

> "Q. Does that leather band at the base of the cone form any part of the sounding-board or tympanum?
>
> A. Only in a very minor and imperceptible sense. The leather, while it has a certain amount of rigidity, its rigidity is absolutely insignificant compared to the greater rigidity of the cone diaphragm. In other words, when the cone moves forward, for instance, it will drag a very small portion of that leather forward with it, but the rest of the leather, because of its inertia, and because of the pressure of air, will lag behind, and stay more or less permanent."

Plaintiff's witness, Hazeltine, substantially agreed (R. p. 32):

> "Q. But in the defendant's device that limp leather is not any part of the sounding-board, is it?
> A. It is not an important part. There must be some vibration, therefore some sound produced by it.
> Q. Not audible, though?
> A. That is a matter of degree. It is not important, I said."

The witness Jensen, who has had large experience as a telephone engineer, testified as follows:

> "As to my understanding of the term 'tympanum' as used in the telephony art—a tympanum is, according to the understanding among acoustic and telephone engineers, a stretched diaphragm which will emit a sound when vibrated. The tympanum of Defendant's Exhibit 15 is the stiff part, which, in this case, is the paper. As to whether the kid leather band is a part of the tympanum—if I were speaking to a body of acoustical engineers, or electrical engineers, and tried to tell them that this was a tympanum, that soft kid leather, I think they would smile at me." (R. p. 68.)

The area of the vibratile sounding board of the Rola structure ends at the edge of the cone. The cone is the whole of the effective tympanum. The Rola cone is not the "tympanum of novel construction" of the Hopkins patent; its edges do not extend *integrally* beyond the cone in the form of an annular rim; its limp leather rim is not of one piece with the cone, nor is it crisp, vibratile, "having considerable rigidity within itself"; it has no appreciable or audible function in transforming mechanical vibrations into sound waves; it is, rather, an inert and flexible support for the outer edge of the cone tympanum and a curtain

forming part of the baffle separating the air spaces on the convex and concave sides of the cone.

The stiff paper cone and limp leather rim of Rola are not equivalent to the "tympanum of novel construction" of Hopkins either in function, purpose, or legal significance. As said by Judge Bourquin (27 F. (2d), 758):

> "In defendant's device only the cone is of crisp vibratile material, the flat rim being of limp kid, and the former alone effectively vibrates.
>
> The material of the one differs from that of the other, as do things differing in nature.
>
> *Hopkins discovered and invented the one, but not the other, and his patents teach that the first is vital to success and that the second spells failure.*" (Lektophone Litigation, p. 80.)

(b) The Diameter of the Base of the Effective Tympanum of Rola is Materially Less Than Nine Inches.

In Plaintiff's Exhibit No. 4 the legend "tympanum" is improperly applied to the diameter of the aperture in the metal frame. Even this is less than nine inches. But the diameter of the *effective* tympanum of Rola is not that of the aperture in the metal frame, but that of the base of the cone, which is seven and nine sixteenths inches. The diameter of the tympanum of Rola is thus 16% less than the minimum diameter of the tympanum of the patent. And the area of the base of the tympanum of Rola is about 30% less than the minimum area of the tympanum of the patent.

For reasons sufficiently discussed above, this disparity excludes the Rola structure from the scope of the claims.

(c) The Flexible Rim Between the Tympanum and the Metal Frame of Rola is Neither Crisp Nor Stiff Nor Vibratile; it is Limp Kid Leather.

Plaintiff cannot deny that this is so as a matter of fact. It attempts to meet the situation by an argument of equivalence.

Looking to the character of material alone, there is certainly no similarity between limp kid leather and the crisp, stiff tympanum material so carefully described as being "of vital importance" in the patent.

The argument of equivalence must then depend not upon similarity of material but supposed similarity of function.

But the weight of evidence is opposed to the argument.

The defendant's rim is not to any appreciable extent a part of the sounding board (R. p. 49) as in the case of the vibratile rim of the Hopkins device. It does not support the cone stiffly in true axial alignment, as with Hopkins, but flexibly. It is not a part of the tympanum in sound regenerating function but rather a part of the baffle which cooperates with the small cone to make possible the reproduction of low tones.[43] It absorbs and dampens undesirable energy in the cone. (R. pp. 52-53.) Hopkins' rim has no such function.

---

[43] Hazeltine, for plaintiff, said at R. p. 32:

"Q. But with the baffle and that small cone, you are able to produce those notes of low frequency which you otherwise would not obtain, isn't that a fact?

A. It is a matter of degree, but, generally speaking, that is true. You always get some low notes. You get more with the baffle than you would without."

The fact is that defendant and others, by proper electrical compensation and energy absorbing means by the use of a flexible inert rim and baffle wall and other improvements have achieved satisfactory sound regeneration for radio purposes by the use of conical tympana of different type from Hopkins and of less than nine inches diameter. The mere fact that they have achieved this result is not evidence of infringement. *Patents are not granted for results.* It is evidence, on the contrary, that they have found other combinations of means of different inventive character and kind and capable of achieving in a different way the results which Hopkins demonstrated could be achieved with his type of tympanum only when provided with a diameter in excess of nine inches.

Plaintiffs argue that because defendant's structure produces good results it employs the same mode of operation as Hopkins and is therefore an infringement.

The argument proceeds in a circle. Hopkins' device was never built except experimentally, and none was offered in evidence in this case. There is no evidence as to its mode of operation *except speculation.* What then is the basis of comparison upon which plaintiff depends? It is only by *assuming* that defendant's device and others, licensed or unlicensed, employ the same principles and functions as are said to be embodied in the Hopkins device, that plaintiff can argue any practical achievement at all for its patentee. To go further and say that *because* the accused devices employ these principles and functions, they embody a mode of operation and achieve a result that was new with Hopkins, simply completes the circle.

The assumption of equivalent mode of operation is fundamental to plaintiff's argument. The assumption cannot stand in the face of the proofs of the diametrically

opposed functions of the sound deadening rim of Rola and the sound generating rim of Hopkins. The assumption being fallacious, the whole argument of infringement falls.

The burden of demonstrating equivalence rests on the appellants.

> *Seymour* v. *Osborne,* 11 Wall. 516;
> *Railroad Co.* v. *Mellon,* 104 U. S. 119.

(d) The Outer Edge of the Crisp, Vibratile Tympanum of Rola is not Rigidly Mounted in the Metal Frame; it is Flexibly Supported from the Metal Frame by the Limp Leather Rim.

Here is a difference between the device of the patent and of the defendant which is not only functional but goes to express limitations in every claim of the patent.

Defendant's witness, Tenny, pointed out at R. pp. 52 and 53 some of the functional differences between the rigid support at the periphery of a tympanum of crisp, vibratile material throughout, such as Hopkins, and the flexible support, as by a limp leather rim, of a plain conical tympanum such as Rola's. The differences are matters of practical, scientific fact and we find nothing in the record to the contrary. Certainly they are not refuted by the complaisant generalization of plaintiff's expert to the effect that he believes the mode of operation of defendant's loud speaker is just the same as the mode of operation described in the Hopkins patent. The patent contains not one word or suggestion of the use of a different or more flexible material for the rim than for the cone, and accordingly Hazeltine's expressions concerning relative width of rim where more flexible material is used are entirely without basis in the patent, and represent only the wisdom of hindsight which is so common among patent experts.

Referring to the patent claims we observe that every one of them calls, in one form of words or another, for rigid mounting of the outer edge of the tympanum in the metal frame that bounds it. Direct *rigid* support of the tympanum itself is called for by every claim. Hopkins' tympanum of novel construction adapts itself to such support by reason of the flat or corrugated rim. But Rola's conical tympanum is not rigidly supported at its periphery and it is quite obvious that it could not operate if so supported.

It follows that none of the claims are infringed.

IV.

SOME SPECIFIC REPLIES TO, AND COMMENTS ON, SOME PARTS OF PETITIONER'S BRIEF.

What follows under this caption is not intended to be a complete answer to all of the contentions in the petitioner's brief but only to some of them. The others are necessarily answered, we think, by the arguments which we have heretofore advanced in support of the petitioner's various positions.

(a) At page 12 plaintiff's brief states:

> "Hopkins taught that the base area of his conical sounding-board should be not less than half the area of a tympanum (cone plus rim) nine inches in diameter. For the purpose of the present case that may be taken to be a cone having a minimum basal diameter of 7.2 inches—eight-tenths of nine inches."

This, in the language of Mr. Justice Sutherland in *Webster* v. *Splitdorf*, 264 U. S. 463, 466, is "an exigent afterthought rather than a logical development of the original application."

Hopkins did not teach anything other than that the diameter of the whole tympanum between the so-called "ponderous rings" should exceed nine inches; and any effort to show that a cone having a basal diameter of 7.2 inches comes within the teachings of the Hopkins patents, irrespective of the size and character of the rim, can not be justified under any reasonable interpretation.

In a footnote at the bottom of the same page of plaintiff's brief it is asserted that the figures given by Hopkins are not "mathematically accurate." This only adds to the indefiniteness and uncertainty of the patent in suit.

(b) At page 15 of plaintiff's brief it is stated:

> "So the inventor introduced between the mechanical framework of the device constituted by the rings K, K' and the vibrating cone itself, the plane peripheral portion or supporting rim *l* which *yieldingly* holds the vibrating cone in position."

The word "yieldingly" is stressed by italicized type and appears to be the feature of novelty relied upon by plaintiff; but there is no basis for this in the patent specification. Instead, the language of the patent is that the tympanum should "be made of crisp, strong, material having considerable rigidity within itself" and also should have "as little inertia as possible without a weakening effect." The "yielding," if any, permitted in the Hopkins structure, is akin to a spring, and in no wise equivalent to the flabby, flexible, thin leather rim employed by defendant.

(c) An important admission in plaintiff's brief appears at page 21, where it is stated:

> "The rim of defendant's structure is narrower than the Hopkins rim, thereby diminishing the overall

diameter of the tympanum to slightly less than nine inches, but the narrower rim is made of more flexible material so that the desirable flexibility is retained."

The brief then goes on to say:

"It is plaintiff's position, therefore, that this change in form is a mere colorable departure from the disclosure of the patent, and does not avoid infringement. We think no other conclusion can be reached unless (1) it appears that the patentee departed from the prior art only in his choice of the material of the rim so that the form (material) of the rim is of the essence of his invention, or (2) the language of the specification and the representations made in argument before the Patent Office are to be taken to exclude this change in the material of the rim." (p. 21.)

The answer to this is that the patentee is limited not only as to *size*, under the principles enunciated in the *Minerals Seperation* case, *supra*, but also as to the *material* of the rim, under the doctrine set forth in *White* v. *Dunbar*, 119 U. S. 47.

In the latter case the patentee attempted to assert a monopoly on all sorts of material used for enveloping shrimps preserved in cans. Throughout the specification, however, the material was referred to as "a textile material, preferably of cotton or muslin." The defendant employed a paper bag or envelope, and while some of the claims were broad enough to cover such paper material by indirection, this court said:

"We see nothing in all this to raise the slightest implication that the patentees were the inventors of the process of interposing any and every kind of lining between the cans and their contents."

To say that the more flexible the rim the narrower it can be simply begs the question. The patent does not deal with any particular size of rim. What it does require is that it shall be *stiff and vibratile* and a part of the sound generator. It necessarily must be large, on account of Hopkins' failure to employ a baffle board.[44]

(d) The statements on pages 37-38 of petitioner's brief may give the impression that Hopkins deliberately set out to rectify some of the alleged shortcomings of Starling & Cole. This is not correct. The Patent Office did not cite Starling & Cole, and nothing was said by Hopkins in any of his arguments before the Patent Office relative to the shortcomings of a free-edge cone such as Starling & Cole disclosed. As heretofore pointed out, the weaving or blasting was not a problem with Hopkins (who was dealing with phonographs), because of the small amount of power available to vibrate the cone in such instruments.

(e) Plaintiff's brief, page 39, says:

> "It was not in the material of the rim, but in throwing away the sound-box and horn and *enlarging* the structure to produce a direct-acting loudspeaker that Hopkins departed from the prior art of sound-box and horn structures. Having, by *this exercise of inventive ingenuity*, bridged the gap between the sound-box and horn constructions and the successful direct-acting loudspeaker, *it requires no more than engineering skill* for someone else to use in Hopkins' combination the rims of various materials that had previously been used in the small diaphragm constructions."

But as above shown, and as found by the courts below, others had already thrown away the sound-box and horn

[44] R. pp. 52-53.

and had sufficiently enlarged the structure of the conical diaphragm to produce a direct-acting loud speaker. As a matter of fact, no enlargement of the conical diaphragm over those theretofore employed in phonographs was required to produce direct action or so-called "self-sustaining sound waves," in a radio loud speaker, and this fact was demonstrated before the Court of Appeals and was referred to in the opinion of that court. (*Lektophone* v. *Rola*, 34 Fed. (2d) 764.)

The trade no doubt would use the smaller diaphragm except that in such cases a larger baffle or cabinet would have to be employed to avoid interference between the waves given off from the front and rear of the cone. Such a large baffle would take up too much space; and somewhere there has to be a compromise to suit the public's taste. It does not follow, however, that because the industry has seen fit to reduce the size of the baffle and enlarge the size of the conical diaphragm, Hopkins, who never understood or appreciated the importance of a baffle, should be given a monopoly on any device which might employ a conical diaphragm and give off so-called "self-sustaining sound waves."

The situation is no different from that of building houses or bathrooms. A bungalow or a bathroom of certain proportions may come into favor; but the architect or contractor who happened to be the first to construct a building or room of such proportions would not, under our laws, be considered as an inventor or discoverer. He is merely catering to the tastes of the public and following the skill of his calling, as expressed in *Concrete Appliances Co.* v. *Gomery, supra.*

It is difficult to reconcile plaintiff's statement wherein Hopkins' slight changes, if any, over the prior art are

designated as "the exercise of inventive genius," with the other assertion that the many changes and improvements made by pioneers in the radio loud speaker industry are "no more than engineering skill."

The quoted paragraph also refers to Hopkins' bridging some gap; but there was no gap to be bridged, so long as Hopkins remained in the phonographic art. The real gap to be bridged was the one wherein certain practices known to the acoustic art were adapted to the needs of loud speakers for radio purposes; and this certainly was not done by Hopkins, but by others, such as Farrand, Western Electric Company, and the present defendant.

(f) The authorities cited in the plaintiff's brief (pp. 40-42), and the rules deduced therefrom, do not assist the petitioner, because (a) Hopkins expressly made size an element of all of his claims but two, and, as before shown, he impliedly made it an element of those claims, and (b) on the matter of interpretation, the Court can not disregard what the patentee has said to the Patent Office are the essentials of his invention. *I. T. S. Rubber Co.* v. *Essex Rubber Co.*, 272 U. S. 429.

Moreover, the plaintiff cannot complain of any admissions in the file wrappers which are detrimental to it, because the file wrappers were offered by the plaintiff and received as its exhibits.

(g) On pages 59-60 of petitioner's brief, the statement is made that when, in a communication to the Patent Office, the solicitor said that it was essential that the "base of the *vibratile* portion" of the tympanum exceed 9 inches in diameter, and that "the peripheral edge of the tympanum, exterior of the *vibratile* portion be rigidly secured", he was in error, because it was never suggested in the specifications

that "the basal diameter of the conical *portion* of the tympanum should exceed 9 inches". On the contrary, it would seem clear that when the solicitor referred to the necessity of the "vibratile portion" exceeding 9 inches, he meant not only the cone, but the annular rim as well, because all through the specifications the latter is indicated by the patentee as a vibratile portion. There is no warrant for assuming that the solicitor was in error, but rather that the effort is made now to place upon the solicitor's language an unwarranted construction and thereby escape the stamp of approval which he then gave to the present contention of the defendant, *i. e.*, that the rim is a necessary part of the tympanum as defined by Hopkins and serves to reproduce sounds. The Court of Appeals for the Second Circuit in the *Sylo* case, has termed this a "sounding rim". The Appellate Court in the present case has made similar findings, and such was the finding of both courts in the *British* case.[45]

It must be borne in mind that Hopkins was a patent solicitor himself and in the employ of the attorneys who solicited the patent, organized the plaintiff corporation, and are now litigating the patent (R. p. 77).

The expression "exterior of the vibratile portion" undoubtedly means that part of the plane which is clamped between the ponderous rings and which, by reason of the clamping, is not vibratile.

(h) We accept and adopt the statement of plaintiff's counsel (page 63 of plaintiff's brief) as follows:

> "The true inquiry is: What mode of operation is introduced and employed, and what result is attained by the structure or device *illustrated and de-*

[45] Lektophone Litigation, p. 17.

scribed as the preferred embodiment of the invention, and whether defendant's combination of elements performs substantially the same function in substantially the same way to obtain the same result?"

This court, will, we think, have no difficulty in finding, as did the other courts, that the result attained by the structure or device illustrated and described as the preferred embodiment of Hopkins' alleged invention was reproduction of sound waves from a phonograph record without the use of a horn, which result had already been accomplished in the prior art. That the defendant's combination of elements does not perform the same function in substantially the same way as plaintiff's combination is obvious from the fact that defendant employs a much smaller diaphragm, a different character of rim, a baffle board, and actuates this diaphragm through electrical impulses greatly augmented and amplified by resort to vacuum tubes and batteries or other source of electrical energy peculiar to radio reception.

(i) At page 68 of plaintiff's brief it is admitted that the Starling and Cole device was a scientifically correct idea, but it is contended that it failed of practical commercial reality because of lack of support at the base, which feature was already well known to the industry long prior to Hopkins' appearance in the field. The record clearly shows that Hopkins did not achieve any commercial success in the particular art in which he was struggling (that is to say, the phonographic art), and that little or nothing was known of the Hopkins device from the time that he filed his application, back in 1913, until after the time that radio broadcasting came into prominence and

that the Hopkins device could not successfully be adapted to radio purposes without considerable changes and improvements; and whatever recognition was given to it was by reason of its "nuisance value".

CONCLUSION.

IT IS RESPECTFULLY SUBMITTED THAT THE DECREE OF THE COURT BELOW SHOULD BE AFFIRMED.

Respectfully submitted,

CHARLES E. TOWNSEND,

WILLIAM A. LOFTUS,

THOMAS G. HAIGHT,

THEODORE S. KENYON,

Counsel for Respondent.

APPENDIX.

The French and German Decisions.

No note has been taken in this brief of the French and German decisions referred to in plaintiff's brief, because the laws of those countries are so different from the American and British laws. A few brief comments are made on these cases, however, in order to show that because of the peculiar facts pertaining to them, quite irrespective of the difference in the laws, they cannot be considered as of any weight in the case at bar.

Chanoit* v. *Davis*, *Court of Appeals of Paris (Lektophone Litigation, p. 164):

The action appears to have been based upon the Davis patent of 1914 corresponding, apparently, to the Hopkins patents in suit, and likewise upon later patents taken out in 1920 by Compagnie Pathe. There was also a question of trade mark infringement involved in the suit. The decision was in favor of plaintiff. No clear description of defendant's device appears from a reading of the decision, except that defendant's devices

> "are light, rigid, of conical form, are elastically supported and have a diameter at the base greater than the minimum diameter advised by the Davis patent." (Lektophone Litigation, p. 166.)

and that

> "the party Chanoit, moreover, recognizes that their devices comprise a tympanum similar to that of the Davis patent, and that it has the stylus fixed to the apex of the tympanum in the manner described in the Pathe patent." (Lektophone Litigation, p. 167.)

Mention of a stylus in the foregoing quotation indicates that the defendant was in all likelihood putting out a sound regenerator for phonographs, since there is no such thing as a stylus employed in connection with radio loud speakers.

For the foregoing reasons it is not seen where there is anything in this French decision helpful to plaintiff's case herein.

The French Decisions in Davis et al. v. Radio-Electrique:

This case appears to have involved a question of estoppel. For example, the lower court, Civil Tribunal of the Seine (pp. 181, 182, Lektophone Litigation) points out that defendant had previously been purchasing loud speakers from the plaintiff and had a certain trade agreement in the nature of a license.

The character of the defendant's loud speaker in this case is not shown by the record, but apparently was considered by the court to be a close copy of the device of the patent (Lektophone Litigation, p. 189).

The German Case (Lektophone Litigation, p. 227):

This decision in the *German* case is not clear on account of lack of information as to what devices were before the Provincial Court of Berlin, and the status of the various parties. In any event, the practice in Germany under patent law is quite different from that obtaining in this country, for the reason that once a German patent has been granted and a certain time elapses for the filing of an opposition, the patent becomes more or less inviolate, and an alleged infringer must proceed by way of an action to revoke the patent. Thus, the one who would be the defendant

under our practice becomes the plaintiff under German practice, and is shouldered with a heavy burden of proof.

So-called "friendly suits" are not uncommon in Germany for the purpose of establishing the status of a patent; and something of this character is suggested where the Provincial Court refers to the attitude of a certain Association of Broadcasting, as follows:

> "As mentioned by plaintiffs themselves, counsel for the Association of the Broadcasting Industry have changed their opinion, and the Association of the Broadcasting Industry have taken a license." (Lektophone Litigation, p. 255.)

Moreover, it appears that the plaintiffs (which under our practice would be the defendants) were at one stage or another a licensee under the German patent; and it is stated at page 230:

> "After the discontinuance of their license agreement Plaintiffs firstly brought a suit for declaratory judgment that the cone loud speakers manufactured by them did not come within the scope of Defendant's patents."

This, of course, under our law would bring up a serious question of estoppel, not only to deny validity of the patent, but likewise the scope thereof, depending upon what the parties had done under the license agreement.

It is submitted that little or no weight can be attached to a decision of this character, where all of the facts are not revealed by the record, and emanating from a country whose practice differs radically from that of this country.

FILE COPY

FILED
DEC 31 19
CLERK

Supreme Court of the United States

OCTOBER TERM, 1930.

No. 19.

LEKTOPHONE CORPORATION, *Petitioner,*

vs.

THE ROLA COMPANY.

OCTOBER TERM, 1930.

No. 68.

MILLER BROTHERS COMPANY, *Petitioner,*

vs.

LEKTOPHONE CORPORATION.

ON WRITS OF CERTIORARI TO THE UNITED STATES CIRCUIT COURTS OF APPEALS FOR THE NINTH CIRCUIT AND FOR THE THIRD CIRCUIT.

PETITION FOR REHEARING.

WILLIAM H. DAVIS,
of Counsel.

GALLO & ACKERMAN, Inc., 142 Liberty Street. 'Phones—Hitchcock 8078-9.

Supreme Court of the United States

NOS. 19 AND 68—OCTOBER TERM, 1930.

LEKTOPHONE CORPORATION, *Petitioner,* vs. THE ROLA COMPANY, *Respondent.*	On writ of certiorari to the United States Circuit Court of Appeals for the Ninth Circuit.
MILLER BROTHERS COMPANY, *Petitioner,* vs. LEKTOPHONE CORPORATION, *Respondent.*	On writ of certiorari to the United States Circuit Court of Appeals for the Third Circuit.

PETITION FOR REHEARING.

Now comes Lektophone Corporation, and petitions this Honorable Court for a reconsideration and rehearing of the above-entitled cause because:

I. It is not true that Hopkins' disclosure included "tightly gripping and rigidly supporting the outer edge of the cone between two rings" (Opinion, p. 2).

No other Court in this country or abroad has ever before attributed a gripping of the edge of the cone to Hopkins' disclosure. The truth is that Hopkins intro-

duced between the cone and the rigid clamping rings "an annular plane peripheral portion or supporting rim *l*" (pat., p. 2, lines 74-75) which "yields sufficiently to permit of the required motion of the conical portion" (Appln., Tr., 337) whereby "the intended object, a simultaneous movement of the whole conical portion of the tympanum, is thus attained" (pat. p. 2, lines 121-122). That was the holding in the "several cases in the lower courts and abroad" (Opinion, p. 2), including the decisions of Judge Thacher and of Judge Hickenlooper (*post*, pp. 3 and 4) and of Mr. Justice Tomlin (Pamphlet, p. 209).

II. The question of infringement cannot reasonably be adjudicated without determining whether defendants' leather (or cloth) rim is functionally equivalent in the combination to this "annular plane peripheral portion or supporting rim *l*" of Hopkins.

III. Judgment of the question of infringement without determining that, overturns that reasonable and important milepost of patent interpretation erected by this Court, after a long-continued struggle, in the Paper Bag Patent Case, 210 U. S., 405. It sets up again the discredited, empirical and unreasonable rule rejected by this Court in that famous case.

ARGUMENT.

I.

(a) The "annular rim which encircles said conical portion and which is rigidly supported" defined in the eighth claim of the patent (for example) is an essential element of the patented three-element combination. It absolutely excludes the idea that the edge of the cone is gripped by the rings.

(b) The "result claimed for the rigid support" (Opinion, p. 2) cannot be attained in accordance with the invention by gripping the outer edge of the cone between the rigid rings. That would inhibit the bodily movement of the conical portion which it was the patentee's express object to attain.

(c) Erring on this essential fact, the opinion of this Court mistakenly suggests (pp. 2-3) that its finding is in accord with that of Hickenlooper, J., in the *Crosley case.* The basis of Judge Hickenlooper's opinion was very different from—specifically it was just the antithesis of—the finding of this Court.

The basis of Judge Hickenlooper's opinion was that the Hopkins combination **includes** (Pamphlet, p. 63):

> "an annular rim interposed between the rigid support and the conical portion, to maintain the place of the conical active portion, and yield sufficiently to permit the required motion of the conical portion, * * *"

and that the Crosley device did not infringe because (Pamphlet, pp. 63-64):

> "The periphery or base of the cone **does not,** however, **terminate in an annular rim interposed between the rigid support and the conical portion**"

and (Pamphlet, p. 71):

> "* * * the patentee here is limited to a diaphragm **having the annular rim, rigidly held,** and to a comparatively narrow range of equivalents. **The loose rubber ring of Brandes may be such equivalent but the total absence of any annulus cannot be so considered.**"

Where Judge Hickenlooper held that the patented three-element combination **includes** an annular rim and Crosley's device did not infringe because it had **no such rim**; this Court erroneously finds that Hopkins' rings clamp the edge of his cone, and that defendants' devices do not infringe because they **have** a flexible rim interposed between the cone and the rings.

(d) This Court says (Opinion, p. 3):

> "The plaintiff's cone, of crisp, strong, more or less rigid material, is continued in one piece under the rings that give it a rigid support. Its tympanum includes this outer edge."

But the rings do not give plaintiff's cone a rigid support. The rings clamp only the outer edge of the rim. The greater portion of the width of the rim lies between the cone and the rigid rings and affords a yielding support for the cone.*

(e) The remarks quoted by this Court (Opinion, p. 3) from the opinion of Judge Thacher in the *Western Electric case* are erroneously applied to defendants' constructions here. Of the double cone *Western Electric* construction, Judge Thacher said:

> "* * * the defendant's structure, although it comprises a tympanum support having a circular aperture, does not comprise a tympanum having its outer edge rigidly mounted on said support in said aper-

*In the manufactured "Actuelle" phonograph loudspeaker, the yielding portion of the rim between the cone and the frame was a single deep corrugation or gutter, following the suggestion of the patent (p. 2, lines 127-129) that—

> "it is possible to form radial or concentric corrugations in the plane peripheral portion *l*."

> ture within the meaning of claim 4. Nor does it comprise an annular rim which encircles the conical portion of the tympanum within the meaning of claim 8." (20 Fed. [2d], 154.)

and

> "* * * to hold that the defendant's device comprises a 'tympanum rigidly supported at its periphery' within the meaning of the claims is to construe the claims contrary to the plain import of their terms." (20 Fed. [2d], 154.)

These remarks by Judge Thacher, quoted by this Court in its opinion (p. 3) were based on the fact that the tympanum support in the *Western Electric* contrivance lay **inside** of the circumference or outer edge of the cone; the inturned cone frustum did not encircle but lay **inside** of the conical portion of the tympanum. In defendants' devices here, the annular rim certainly encircles the conical portion and the outer edge of the rim is rigidly mounted in the rings.

The "experiments that showed the difference in function of the two devices" to which this Court refers (Opinion, p. 3) were the Stroboscope experiments which convinced Judge Thacher that in the *Western Electric* contrivance (20 Fed. [2d], 154):

> "There was **no bodily movement** of the front cone as a whole, which **did not, as it obviously could not, move upon the frustum of the rear cone as a hinge, the joint between the two cones being rigid and inflexible.**"

He therefore found no infringement because, as he had held, the Hopkins invention is characterized by—

> "the method devised for supporting the edges of the vibrating cone by means of **a flexible annular rim**" (20 Fed. [2d], 154)

and

> "**This bodily movement** of the comparatively stiff and rigid cone [observed when the Hopkins device is looked at under a Stroboscope] **is,** of course, **made possible by the flexible annular rim, the function of which is to serve as a hinge permitting bodily movement of the cone**" (*idem*).

The *Miller* device here adjudicated was subjected to the same Stroboscope experiment and unlike the *Western Electric* contrivance was observed **to have the same bodily movement of the comparatively stiff and rigid cone made possible by the flexible annular rim, which characterizes the Hopkins combination** (Miller, Tr., 167—Exhibit O).

Thus, the experiment which, applied to the *Western Electric* contrivance, showed a mode of operations different from Hopkins; showed, when applied to the defendants' structure here, the same mode of operation as Hopkins. It was clear error for this Court to assume the contrary.

The quite specific interpretation of Hopkins' claims that brings within them the single cone structure used by defendants here was not negatived by Judge Thacher's exclusion of the double cone *Western Electric* contrivance, affirmed by the Second Circuit Court of Appeals. That was recognized in the sound decision by Galston, J., in the *Colonial case* (Pamphlet, p. 112).

(f) The question of size assumes a wholly different aspect when the functional relationship of Hopkins' plane peripheral rim is analyzed and understood; but in any event the larger of the Miller cones is of the size mentioned in the Hopkins patent; as is also the Colonial loudspeaker held to be an infringement by Judge Galston in the *Colonial case* (Pamphlet, p. 112). The privilege of manufacturing these large cone type loudspeakers is thus

seen to be of very substantial industrial importance; whether the patent is or is not avoided by a structure having a cone of the full area of Hopkins' conical portion, but made of less overall diameter by using an annular rim of more flexible material.

II.

When it is thus recognized that Hopkins' combination included an interposed yielding rim, the question whether defendants' leather (or cloth) rim is functionally equivalent in the combination to the "annular plane peripheral portion or supporting rim *l*" of Hopkins presents itself. Once the question is thus concretely postulated, it must be answered in plaintiff's favor on the testimony of defendants' own witnesses in both cases.*

III.

In our brief in the *Miller case,* we discussed (pp. 19-20) the established rule of patent interpretation which calls for determination of this question of functional relationship in the combination, apart from the intrinsic attributes of the different forms of rim; and in our brief in the *Rola case* (pp. 69-70) we discussed the decision of this Court in the *Paper Bag patent case* which definitely rationalized this important subject. If the decision in the instant case is allowed to stand, the result will be to introduce again into every patent litigation in which the question of equivalence arises, the old confusion and avoidable uncertainty that existed prior to the *Paper Bag patent case* decision; until laboriously, but surely,

*See the testimony of defendant's witnesses in the *Rola case* quoted in our brief in that case at page 20, and the testimony of defendant's expert in the *Miller case,* quoted at pages 21 and 33-35 of our brief in that case.

this Court shall at some future time be brought to a restatement of that sound and reasonable rule—a rule which it has so recently applied (but with a different composition of the Court and without explicit restatement of the rule) in *Temco* vs. *Apco*, 275 U. S., 319, and in *Sanitary, etc.*, vs. *Winter*, 280 U. S., 30.

We believe most sincerely that the errors of fact above pointed out led to erroneous conclusions of law, and that both ought to be corrected.

We call attention to the fact that the opinion of this Court in these cases will be of great interest to the industry and to the Courts and lawyers in all European countries, as well as in this country.

We present this petition, therefore, most respectfully; not only for the particular interest of our client, but also for a more general interest, having in mind the far-reaching reputation of this Court and of the distinguished author of the opinion.

Respectfully submitted,

WILLIAM H. DAVIS,
of Counsel.

I hereby certify that the foregoing petition for rehearing is well founded in law and fact, is filed in good faith, and is not filed for delay.

WILLIAM H. DAVIS.

136

65767

S. C.

TRANSCRIPT OF RECORD

Supreme Court of the United States

OCTOBER TERM, 1930

No. 68

MILLER BROTHERS COMPANY, PETITIONER,

vs.

LEKTOPHONE CORPORATION

ON WRIT OF CERTIORARI TO THE UNITED STATES CIRCUIT COURT OF APPEALS FOR THE THIRD CIRCUIT

PETITION FOR CERTIORARI FILED MARCH 28, 1930

CERTIORARI GRANTED MAY 5, 1930

(34,903)

(34,903)

SUPREME COURT OF THE UNITED STATES

OCTOBER TERM, 1930

No. 68

MILLER BROTHERS COMPANY, PETITIONER,

vs.

LEKTOPHONE CORPORATION

ON WRIT OF CERTIORARI TO THE UNITED STATES CIRCUIT COURT OF APPEALS FOR THE THIRD CIRCUIT

INDEX

	Page
Record from the district court of the United States, district of Delaware	1
Docket entries	1
Bill of complaint	5
Answer as amended	9
Opinion, Morris, J.	13
Interlocutory decree	16
Defendant's petition for appeal	18
Order allowing appeal	19
Defendant's assignment of errors	19
Citation and service	20
Statement of evidence	22
Appearances of counsel	22
Offers in evidence	22
Testimony of Morton Arendt	24
Dayton C. Miller	29
Edward K. MacEwan	75
Albert C. Diehl	81
Harry O. Sooy	82

JUDD & DETWEILER (INC.), PRINTERS, WASHINGTON, D. C., JUNE 30, 1930

Page

Testimony of Edward K. MacEwan..... 84
Selden T. Williams..... 86
Dayton C. Miller (recalled)..... 95
Robert H. Marriott..... 115
Dayton C. Miller (recalled)..... 126
Morton Arendt (recalled)..... 150
Clair Farrand..... 151
Marcus C. Hopkins..... 217
Stipulation re condensed record..... 286
Order approving condensed record..... 286
Plaintiff's Exhibit 1—File-wrapper and contents, Hopkins U. S. patent No. 1,271,529..... 287
Plaintiff's Exhibit 2—File-wrapper and contents, Hopkins U. S. patent No. 1,271,527, July 2, 1918..... 323
Plaintiff's Exhibit 5—Arendt drawing showing dimensions of defendant's loud speakers..... 451
Plaintiff's Exhibit 34—Proceedings of the Radio Club of America, Volume 3, No. 10, October, 1926, "Cone Loud Speakers," by C. L. Farrand..... 453
Plaintiff's Exhibit 35—Drawing, waves in cone diaphragm..... 457
Plaintiff's Exhibit 36—Drawing, Chladni figures..... 459
Defendant's Exhibit 7—Journal, A. I. E. E., March, 1926, "Methods of High Quality Recording and Reproducing of Music and Speech Based on Telephone Research"..... 461
Defendant's Exhibit 11—Maxwell U. S. patent No. 216,051, June 3, 1879..... 473
Defendant's Exhibit 11-A—Dann & Lapp U. S. patent No. 338,660, March 23, 1886..... 476
Defendant's Exhibit 11-B—Stroh British patent No. 3393 of 1901. 480
Defendant's Exhibit 11-C—Kraemer U. S. patent No. 890,142, June 9, 1908..... 483
Defendant's Exhibit 11-D—Lumiere U. S. patent No. 986,477, March 14, 1911..... 486
Defendant's Exhibit 11-E—Lumiere U. S. patent No. 1,036,529, August 20, 1912..... 497
Defendant's Exhibit 11-F—English U. S. patent No. 1,064,062, June 10, 1913..... 509
Defendant's Exhibit 11-G—English U. S. patent No. 1,192,289, July 25, 1916..... 515
Defendant's Exhibit 11-H—Elfering U. S. patent No. 1,182,078, May 9, 1916..... 520
Defendant's Exhibit 11-I—Brown British patent No. 29,833 of 1910..... 523
Defendant's Exhibit 11-J—Brown British patent No. 1157 of 1911..... 528
Defendant's Exhibit 11-K—Lodge British patent No. 9712 of 1898..... 533
Defendant's Exhibit 11-L—The Talking Machine News, July, 1907, "The 'Vibratophone': A New Phonograph"..... 541

Page

Defendant's Exhibit 27—Service Bulletin No. 1, Victor Talking Machine Company, December 16, 1927 543
Defendant's Exhibit 28—Service Bulletin No. 1, Victor Talking Machine Company, October 27, 1927 544
Defendant's Exhibit 38—Chart of frequency vibrations of music notes 545
Defendant's Exhibit 39—Watts & Maxwell U. S. patent No. 237,712, February 15, 1881 547
Defendant's Exhibit 40—Davis and Joss U. S. patent No. 1,312,958, August 12, 1919 550
Defendant's Exhibit 41—Photograph of sand patterns of Hopkins diaphragm 555
Defendant's Exhibit 42—Photograph of sand patterns of Hopkins diaphragm 557
Defendant's Exhibit 43—Certified copy specifications and drawings, Hopkins Canadian patent No. 266,936 of 1926 559
Defendant's Exhibit 44—Certified copy specifications and drawings of Hopkins Canadian patent No. 266,934 of 1926 571
Stipulation re transcript of record 587
Order approving stipulation re record 588
Clerk's certificate 589
Clerk's certificate, United States circuit court of appeals, third circuit 591
Order allowing certiorari 591

UNITED STATES OF AMERICA,
DISTRICT OF DELAWARE, } *ss.:*

BE IT REMEMBERED, that at a District Court of the United States for the District of Delaware, begun and held at the United States Court House and Post Office Building, in the City of Wilmington, in said District of Delaware, at the time and place required by law, among other, the following proceedings were had, to wit:

LEKTOPHONE CORPORATION,
Plaintiff,
v.
MILLER BROTHERS COMPANY,
Defendant.
No. 712.
IN EQUITY.

DOCKET ENTRIES.

Feb. 19, 1929. Bill of complaint filed; same day subpœna issued, returnable March 11, 1929.

Feb. 21, 1929. Marshal returns on subpœna "Served," &c.; same day writ filed.

Feb. 25, 1929. Defendant appears by Wm. H. Foulk, Esqr., its solicitor; same day præcipe filed.

Mar. 6, 1929. Motion for preliminary injunction with affidavits of William H. Davis, Morton Armdt and Lester Lyon, with exhibits, filed; same day order setting motion down for hearing March 22, 1929, at 10 o'clock A. M.; affidavits to be filed by defendant on or before March 16,

1929, and by plaintiff in reply on or before March 21, 1929; same day order filed. (Exit copies to Marshal for service).

Mar. 7, 1929. Report to Commissioner of Patents mailed and copy filed.

Mar. 7, 1929. Marshal returns on copy of motion and order, "Served," &c.; same day copy filed.

Mar. 15, 1929. Order continuing hearing on motion for preliminary injunction until April 17, 1929, and for filing defendant's affidavits until April 8, 1929, and plaintiff in reply until April 15, 1929; same day order filed.

Mar. 29, 1929. Answer filed.

May 8, 1929. Stipulation filed; same day order granting leave to file amendment to answer; same day amendment filed.

May 8, 1929. Trial before Court.

May 9, 1929. Trial before Court.

May 10, 1929. Trial before Court.

May 11, 1929. Trial before Court.

May 12, 1929. Trial before Court.

May 13, 1929. Trial before Court.

May 13, 1929. Record of proceedings at trial, filed.

Oct. 14, 1929. Hearing on bill, answer and proofs.

Oct. 14, 1929. Amendment to answer, filed.

Jan. 23, 1930. Opinion of court, filed.

Feb. 12, 1930. Interlocutory decree that patent valid and infringed and that injunction issue, &c.; same day decree filed.

Feb. 12, 1930. Defendant's petition for appeal, with assignments of error filed; same

day order allowing appeal, bond in the sum of $250; same day order filed.

Feb. 12, 1930. Order staying injunction pending appeal, &c.; same day order filed.

Feb. 17, 1930. Order approving bond of defendant on appeal, in the sum of $250, with American Employers' Insurance Company as surety; same day bond filed.

Feb. 17, 1930. Citation issued.

Feb. 20, 1930. Citation, with acceptance of service by solicitor for plaintiff-appellant endorsed thereon, filed.

Feb. 28, 1930. Report to Commissioner of Patents mailed and copy filed.

Feb. 28, 1930. Stipulation as to transcript of record filed; same day order approving same; same day order filed.

Mar. 4, 1930. Stipulation as to condensed record with condensed record filed; same day order approving condensed record; same day order filed.

BILL OF COMPLAINT.

(Filed February 19, 1929.)

IN THE DISTRICT COURT OF THE UNITED STATES,
FOR THE DISTRICT OF DELAWARE.

LEKTOPHONE CORPORATION,
Plaintiff.

v.

MILLER BROTHERS COMPANY,
Defendant.

No. 712. IN EQUITY.

The plaintiff, LEKTOPHONE CORPORATION, for its bill of complaint, alleges:

1. That it is a corporation duly organized and existing under the laws of the State of Delaware, and is a resident and inhabitant of said state, having an office and place of business in Jersey City, State of New Jersey; that the defendant, MILLER BROTHERS COMPANY, is a corporation duly organized and existing under the laws of the State of Delaware, and is a resident and inhabitant of said state, and has a regular and established place of business at 900 King Street, Wilmington, Delaware, within the District of Delaware, and that the hereinafter alleged acts of infringement were committed within the District of Delaware.

2. That the jurisdiction of the Court depends upon the patent laws of the United States.

3. That prior to the fourteenth day of July, 1913, Marcus C. Hopkins was the true, original and first inventor of certain new and useful improvements in "acoustic device" not known or used by others in this

country before his invention or discovery thereof and not patented or described in any printed publication in this or any foreign country before his invention or discovery thereof, or more than two years prior to his hereinafter recited application for letters patent therefor, and not in public use or on sale in this country for more than two years prior to his said application and for which no application for letters patent in any country foreign to the United States of America had been filed more than twelve months prior to the filing of the application in this country, and which had not been abandoned; that being entitled to a patent for said improvements under the provisions of the statutes of the United States then in force, the said Marcus C. Hopkins did, on the fourteenth day of July, 1913, file in the Patent Office of the United States an application for letters patent on said invention, which application was subsequently divided and a divisional application thereof filed on the seventeenth day of April, 1918; that said divisional application was duly assigned to the plaintiff, LEKTOPHONE CORPORATION, before the issuance of said letters patent by mesne assignments duly recorded in the Patent Office; that thereafter, to wit, on the second day of July, 1918, all of the requirements of the statutes then in force having been complied with, letters patent of the United States for said invention, signed, sealed and executed in due form of law, were duly issued and delivered to the said LEKTOPHONE CORPORATION, as assignee of the entire right, title and interest therein and thereto; that the letters patent so issued was No. 1,271,529 and said letters patent or a duly certified copy thereof is ready to be produced in court.

4. That the plaintiff is now and has been ever since the issuance of said letters patent, the owner, subject to certain non-exclusive licenses, of all right, title and

interest in and to said invention and in and to said letters patent No. 1,271,529.

5. That the plaintiff and its licensees, since the date of said invention have caused to be manufactured and sold acoustic devices embodying the invention of said letters patent and have spent large sums of money in causing said invention to be developed and have built up a large and profitable business for the exploitation of said acoustic devices. That plaintiff's ownership of said invention and letters patent has been widely recognized and acquiesced in by the public and by the trade and that said invention and patent rights have been and are of great utility and great value to the plaintiff and to its licensees, and, but for the unlawful acts of the defendant herein complained of, would have been of greater value and profit to them.

6. That prior to and since the acts complained of, said acoustic devices manufactured and sold by plaintiff and its licensees have been duly marked "Patented" together with the date and year in which said letters patent were granted, all in the manner prescribed by the statutes of the United States; that the defendant has been duly notified of its infringement of said letters patent, but notwithstanding said notice, continues said infringement, whereby the defendant has profited and the plaintiff has been damaged.

7. That well knowing the premises, the defendant has, since the grant of said Letters Patent No. 1,271,529, and prior to the filing of this bill of complaint, infringed upon said letters patent and plaintiff's right thereunder, by selling, within the District of Delaware, without right or license, loud speakers embodying the invention of said letters patent; and as an instance of said infringement the plaintiff alleges that prior to the filing of this bill of complaint, and since the

grant of said Letters Patent No. 1,271,529, defendant has sold, without right or license, at its place of business, 900 King Street, Wilmington, Delaware, within the District of Delaware, so called "Fada" loud speakers, known as Models 14B and 15B, embodying the invention of said Letters Patent No. 1,271,529.

WHEREFORE, plaintiff prays:

1. For an injunction, and a preliminary injunction pending this suit, prohibiting the defendant, MILLER BROTHERS COMPANY, its agents and employees, from directly or indirectly making or causing to be made, using or causing to be used, selling or causing to be sold, acoustic devices embodying the invention of said Letters Patent No. 1,271,529, and from infringing upon or violating the rights of the plaintiff under said letters patent in any way whatsoever.

2. For costs and an accounting of profits and damages, and that upon rendering a decree herein, the actual damages be trebled in view of the wilful infringement by the defendant.

3. For such other and further relief as the circumstances of the case may require.

LEKTOPHONE CORPORATION,

(Sgd.) ROBERT DAVIS,
President.

(Sgd.) JOHN F. NEARY,
Solicitor for Plaintiff.

(Sgd.) WILLIAM H. DAVIS,
Of Counsel.

STATE OF NEW YORK,
COUNTY OF NEW YORK, } *ss.:*

ROBERT DAVIS, being duly sworn, deposes and states that he is the president of LEKTOPHONE CORPORATION, the plaintiff named in the foregoing bill of complaint; that he has read and understood the same and knows the contents thereof, and that the same is true of his own knowledge, except as to the matters therein stated to be on information and belief, and that as to those matters, he believes it to be true.

(Sgd.) ROBERT DAVIS.

Sworn to and subscribed before me this sixteenth day of February, 1929.

(Sgd.) E. H. BARRETT,
Notary Public.
Notary Public New York County.
N. Y. Co. Clk.'s No. 78 Reg. No. 0-22.
Commission expires March 30, 1930.

ANSWER AS AMENDED.*

(Filed March 29, 1929.)

The defendant, for answer to the bill of complaint herein, says:

1. Defendant denies each and every allegation contained in paragraph 3 of the bill of complaint, except that it admits having seen what purported to be a copy of Letters Patent No. 1,271,529, issued to plaintiff on July 2, 1918, on an application filed April 17, 1918.

2. Defendant has no information sufficient to form a belief as to matters set forth in paragraph 4 of the bill of complaint and therefore denies the same.

---

*Amendments filed May 8, 1929, and October 14, 1929.

3. Defendant denies each and every allegation contained in paragraph 6 of the bill of complaint.

4. Defendant denies each and every allegation contained in paragraph 6 of the bill of complant.

5. Defendant denies each and every allegation contained in paragraph 7 of the bill of complaint.

6. Defendant specifically denies that it has infringed the said Hopkins Patent No. 1,271,529.

7. Further answering the bill of complaint, defendant alleges on information and belief that the said Hopkins Patent No. 1,271,529 is void and invalid at law for each of the following reasons:

(a) Because the alleged invention thereof has been shown and described in printed publications prior to the alleged invention thereof by the said Hopkins, or more than two years prior to his application for letters patent, among others by the following:

UNITED STATES PATENTS.

Lumiere	No.	986,477
Lumiere	"	1,036,529
Edison	"	963,362
English	"	1,064,062
Lumiere	"	1,072,477
Hogan	"	632,015
Head	"	805,544
Elfering	"	1,182,078
Kraemer	"	890,142
Burch	"	1,506,160
Dann & Lapp	"	338,660
Maxwell	"	216,051
English	"	1,192,289

BRITISH PATENTS

Asam	No. 152,955	of 1903
Lodge	" 9,712	" 1898
Stroh	" 9,418	" 1899
Stroh	" 3,393	" 1901
Brown	" 1,157	" 1911
Brown	" 29,833	" 1910

FRENCH PATENTS.

Gaumont	No. 331,226	of 1903
Ader	" 127,180	" 1878

Article by Starling and Cole in the issue of "Talking Machine News" for July, 1907.

(b) Because of lack of invention in view of the state of the art at the time the alleged invention was made, the state of the art being represented by the publications set forth in paragraph (a) hereof.

(c) Because the patentee Hopkins was not the first inventor of the alleged invention or discovery forming the subject matter of the said Hopkins patent, nor of any substantial or material part thereof, but the same was invented by Jackson L. Waite, of Cleveland, Ohio, at Middletown, Ohio, before the alleged invention or discovery by the said Hopkins.

(d) Because the alleged invention forming the subject matter of the said Hopkins patent was in public use and/or sale before the alleged invention or discovery thereof by the patentee, Hopkins, or more than two years prior to the application for the said Hopkins patent, those knowing of or participating in the said public knowledge, use and/or sale being as follows:

Jackson L. Waite, of Cleveland, Ohio, at Middletown, Ohio;

Alfred B. Wertz, of and at Middletown, Ohio;

Daniel B. Imfeld, of and at Middletown, Ohio;
Dr. W. B. Ligett, of and at Middletown, Ohio;
William E. Watson, of and at Middletown, Ohio;
Etta H. Waite, of and at Middletown, Ohio;
Dr. S. C. Ligett, of and at Lake Worth, Florida;

and perhaps others whose names and addresses defendant is not at present advised.

(e) Because the said patent was not applied for within two years subsequent to the first allowance of the subject matter thereof as required by Section 4897 R. S.

WHEREFORE defendant denies that plaintiff is entitled to the relief prayed for, or to any relief, and therefore prays to be hence dismissed with its costs in this cause sustained.

MILLER BROTHERS COMPANY,
By (Sgd.) WM. H. FOULK,
Its Attorney.

(Sgd.) WM. H. FOULK,
Solicitor for Defendant,
Room 4014, DuPont Building,
Wilmington, Del.

(Sgd.) SAMUEL E. DARBY, JR.,
Of Counsel,
220 Broadway, New York, N. Y.

Dated: Wilmington, Del.,
March 29, 1929.

OPINION OF THE COURT.

(Filed January 23, 1930.)

F. A. D. Andrea, Inc., of New York, manufactures radio loud speakers in two sizes. Instruments of each size were sold by Miller Brothers Company of this State. Thereupon Lektophone Corporation, the owner of Hopkins patent No. 1,271,529 instituted this infringement suit in equity against Miller Brothers Company charging that the sale of the smaller instrument infringed claims 4 and 8 and the sale of the larger infringed all the claims of that patent.

This patent has been considered by various courts including the Circuit Court of Appeals for this Circuit in Lektophone Corp. v. Brandes Products Corp., 20 Fed. (2d) 155. There has been much diversity of judicial opinion with respect to it. But in the Brandes case, the patent was sustained and the scope of the claims ruled upon. The orderly administration of justice requires that matters decided by the Circuit Court of Appeals of any Circuit have a binding effect upon all the District Courts in that Circuit, notwithstanding contrary decisions in other Circuits. Edison Electric Light Co. v. Bloomingdale, 65 Fed. 212. Such matters include the validity and construction of Letters Patent, where the evidence pertinent to such issues are the same. National Folding Box & Paper Co. v. American Paper Pail & Box Co., 48 Fed. 913; Bowers Dredging Co. v. New York Dredging Co., 80 Fed. 119; and, by analogy, Westinghouse Air Brake Co. v. Christensen Engineering Co., 113 Fed. 594; Birmingham Cement Manufacturing Co. v. Gates Iron Works, 78 Fed. 350 (C. C. A. 5); American Bell Tel. Co. v. Southern Tel. Co., 34 Fed. 795. Consequently, without regard to the effect that should be given under the rules of comity by the courts of one Circuit to a decision upon the same

patent by the courts of another Circuit, Mast, Foos & Co. v. Stover M'f'g Co., 177 U. S. 485; Rousso v. First Nat. Bank, 19 Fed. (2d) 247, it is both clear and settled that when a patent has been sustained and construed by the Circuit Court of Appeals of a Circuit, a District Court of the same Circuit subsequently dealing with the same patent even in a suit between different parties must first inquire whether the second record contains anything not before the Appellate Court. If it finds therein nothing new, the earlier decision of the Appellate Court must be accepted as controlling. If something new is discovered, the District Court must next inquire whether the new matter is of such character that it may be fairly supposed that the Appellate Court would have reached a different conclusion had the new facts been before that Court. It cannot be so supposed unless the new matter is clear, substantial and reasonably conclusive. Moreover, the controlling effect of the decision of the Appellate Court is not limited to the facts and defenses discussed in its opinion but extends to all that were before it in the record. Badische Anilin & Soda Fabrik v. A. Klipstein & Co., 125 Fed. 543; Conley v. Thomas, 204 Fed. 93; Flat Slabs Patents Co. v. Wright, Barrett & Stilwell Co., 283 Fed. 345; Rose v. Fretz, 98 Fed. 112; Electric Manuf'g Co. v. Edison Electric Light Co., 61 Fed. 834 (C. C. A. 7); Carson Inv. Co. v. Anaconda Copper Mining Co., 26 Fed. (2d) 651, 657 (C. C. A. 9).

The evidence in the case at bar differs in no substantial particular from that in the Brandes case. Hence, the decree of this Court, in the pending case, must be dictated by the decision of the Circuit Court of Appeals in the Brandes case unless the defense, here made for the first time, under R. S. 4897 is sound.

That section provides in part:

> "Any person who has an interest in an invention or discovery, whether as inventor, discoverer,

> or assignee, for which a patent was ordered to issue upon the payment of the final fee, but who fails to make payment thereof within six months from the time at which it was passed and allowed, and notice thereof was sent to the applicant or his agent, shall have a right to make an application for a patent for such invention or discovery the same as in the case of an original application. But such second application must be made within two years after the allowance of the original application."

The original application, filed July 14, 1913, was allowed April 11, 1916, but the final fee was not paid within six months from such allowance. On March 22, 1918, twenty days less than the two-year statutory period, the second or renewed application was filed. Six days later an amendment was filed cancelling claims 25, 26 and 27 with the statement that those claims had "been cancelled, as those claims will be incorporated together with others, in a divisional application directed to the tympanum or diaphragm per se." The divisional application resulting in the patent in suit was filed April 17, 1918, or six days more than two years after the allowance of the original application. The specification of the patent in suit states that the invention thereof "is to be considered as a division of the invention shown and described in my prior application, renewed March 22, 1918."

In support of its contention that the divisional application was invalidated by R. S. 4897, defendant relies upon Chapman v. Wintroath, 252 U. S. 126; Western Electrical Instrument Co. v. Empire Electrical Instrument Co., 136 Fed. 599 (C. C. A. 2) and Dwight & Lloyd Sintering Co. v. Greenawalt, 27 Fed. (2) 823, 831 (C. C. A. 2). These cases do not, however, in my opinion sustain defendant's view. They contain nothing, particularly when read in connection with Webster Co. v. Splitdorf Co., 264 U. S. 463; American

Laundry Machinery Co. v. Prosperity Co., 295 Fed. 819 (C. C. A. 2); Diamond Power Specialty Corp. v. Bayer Co., 13 Fed. (2d) 337 (C. C. A. 8); Wagenhorst v. Hydraulic Steel Co., 27 Fed. (2d) 27 (C. C. A. 6), that denies to the divisional application, which was filed promptly after the filing of the unchallenged renewed application and contained no new matter, the valid status of the renewed application.

The plaintiff is entitled to the relief it seeks.

(Sgd.) HUGH M. MORRIS, *J.*

January 23, 1930.

INTERLOCUTORY DECREE.

(Filed February 12, 1930.)

This cause having come on to be heard at final hearing upon the pleadings and proofs taken and filed on behalf of both parties herein and counsel for the respective parties having been heard and due consideration having been had, it is, upon motion of John F. Neary, solicitor for plaintiff.

ORDERED, ADJUDGED and DECREED as follows:

1. That Letters Patent of the United States, No. 1,271,529, issued to Marcus C. Hopkins on July 2, 1918, for acoustic devices, are good and valid in law as to all of the claims thereof.

2. That the said Marcus C. Hopkins was the true, original, first and sole inventor of the invention and improvement described in said Letters Patent No. 1,271,529 and defined in the claims thereof.

3. That the plaintiff, Lektophone Corporation, is the lawful, sole and exclusive owner of the entire

right, title and interest arising from and under said Letters Patent No. 1,271,529.

4. That the defendant, Miller Brothers Company, has infringed upon all of the claims of said Letters Patent No. 1,271,529, and the exclusive rights of the plaintiff therein and under the same by selling and using and causing to be sold and used without right, license or consent of the plaintiff, acoustic devices containing, employing and embodying the invention and improvement described and claimed in said letters patent.

5. That a perpetual injunction issue out of and under the seal of this Court directed to and prohibiting, enjoining and restraining the defendant, Miller Brothers Company, its officers, associates, attorneys, directors, clerks, agents, workmen and employees, and every person acting for or on behalf of said defendant, and each of them, from directly or indirectly making or causing to be made, using or causing to be used, selling or causing to be sold or attempting, offering, negotiating for or encouraging the manufacture, use or sale of any or all apparatus embodying the invention of claims 1 to 8 inclusive of said Letters Patent No. 1,271,529, and from infringing upon or violating the rights of the plaintiff under said letters patent in any way whatsoever.

6. That the plaintiff, Lektophone Corporation, do recover of the defendant, Miller Brothers Company, the profits, gains and advantages that it has derived, received, earned or made, or that it shall derive, receive, earn or make by reason of the aforesaid infringement, and that the plaintiff do recover of the defendant any and all damages that the plaintiff has sustained or shall sustain by reason of said infringement, the account to be taken and stated and the dam-

age to be assessed by proceedings appropriated for such purposes hereinafter to be taken.

7. That the plaintiff do recover from the defendant its costs and disbursements in this suit to be taxed, and that all further questions be reserved until the coming in of the Master's report.

(Sgd.) HUGH M. MORRIS,
Judge.

Dated, February 12, 1930.

Approved as to form.

(Sgd.) WM. H. FOULK,
Solicitor for Defendant.

DEFENDANT'S PETITION FOR APPEAL.

(Filed February 12, 1930.)

The above-named defendant, Miller Brothers Company, conceiving itself aggrieved by the decree made and entered on the twelfth day of February, A. D. 1930, in the above-entitled cause, does hereby appeal from said order and decree to the United States Circuit Court of Appeals for the Third Circuit for reasons specified in the assignment of error which is filed herewith and it prays that this appeal may be allowed and that the transcript of the record, proceedings and papers upon which said decree was made, duly authenticated, may be sent to the United States Circuit Court of Appeals for the Third Circuit.

(Sgd.) WM. H. FOULK,
Solicitor for Defendant.

ORDER ALLOWING APPEAL.

(Filed February 12, 1930.)

AND NOW TO WIT, this twelfth day of February, A. D. 1930, upon consideration of the foregoing petition for appeal in the above-entitled cause, it is upon motion of William H. Foulk, Esquire, solicitor for the petitioner,

ORDERED BY THE COURT that the appeal of said defendant prayed for therein, be and hereby is allowed and the amount of the appeal bond to be entered by the appellant is hereby fixed in the sum of two hundred and fifty dollars ($250).

(Sgd.) HUGH M. MORRIS, *J.*

DEFENDANT'S ASSIGNMENT OF ERRORS.

(Filed February 12, 1930.)

Now comes the above-named Miller Brothers Company, by its solicitor, William H. Foulk, Esquire, and files the following assignment of errors upon which it will rely in its appeal herein to the United States Circuit Court of Appeals for the Third Circuit as follows:

1. The District Court erred in granting an injunction.

2. The District Court erred in decreeing Hopkins' patent to be valid.

3. The District Court erred in decreeing any and all of the claims of the Hopkins' patent were infringed by the defendant.

4. The District Court erred in refusing to dismiss the bill of complaint.

5. The District Court erred in failing to hold that the Hopkins' patent was invalid under Section 4897 R. S.

6. The District Court erred in refusing to consider the merits of the case in view of the prior decision of the Court of Appeals for the Third Circuit involving a different infringing structure of a different defendant.

(Sgd.) Wm. H. Foulk,
Solicitor for Defendant.

CITATION.

(Filed February 20, 1930.)

United States of America, *ss.:*

The President of the United States,

To Lektophone Corporation, a corporation organized and existing under the laws of the State of Delaware,

Greeting:

You are hereby cited and admonished to be and appear in the United States Circuit Court of Appeals for the Third Circuit, in the City of Philadelphia, State of Pennsylvania, on the eighteenth day of March, A. D. 1930, pursuant to an appeal taken in a case pending in the District Court of the United States for the District of Delaware, wherein Miller Brothers Company is defendant-appellant, and you are plaintiff-appellee, to show cause, if any there be, why the decree rendered against the said Miller Brothers Company, defendant-appellant, should not be cor-

rected and why speedy justice should not be done to the parties in that behalf.

Witness my hand, at Wilmington, in said district, this seventeenth day of February, A. D. 1930.

(Sgd.) HUGH M. MORRIS,
United States District Judge,
District of Delaware.

Service of the foregoing citation, with copy, accepted this nineteenth day of February, A. D. 1930.

(Sgd.) JOHN F. NEARY,
Solicitor for Plaintiff-Appellee.

PROCEEDINGS AT TRIAL.

IN THE UNITED STATES DISTRICT COURT,
FOR THE DISTRICT OF DELAWARE.

LEKTOPHONE CORPORATION,
Plaintiff,
v.
MILLER BROTHERS COMPANY,
Defendant.

No. 712.
IN EQUITY.

In the U. S. District Court,
Wilmington, Delaware,
Wednesday, May 8, 1929,
10 o'clock A. M.

Before: HON. HUGH M. MORRIS, U. S. District Judge.

Appearances: Messrs. PENNIE, DAVIS, MARVIN & EDMONDS (N. Y. City) by WILLIAM H. DAVIS, ESQ.; HENRY T. HUNT, ESQ. (New York City); JOHN F. NEARY, ESQ., of Counsel for plaintiffs.

SAMUEL E. DARBY, JR., ESQ. (Messrs. Darby & Darby, New York City); G. WILLARD RICH, ESQ. (Messrs. Williams, Rich & Morse, New York City); WILLIAM H. FOULK, ESQ. (Wilmington, Delaware), of counsel for defendants.

Plaintiff's Proofs.

MR. DAVIS: I offer in evidence a certified copy of the file wrapper and contents of the application which resulted in Patent No. 1,271,529 as Exhibit 1.

(Received in evidence and marked "Plaintiff's Exhibit No. 1.")

MR. DAVIS: And a certified copy of the file wrapper and contents of the application which resulted in Patent No. 1,271,527 and which was the parent application as Exhibit No. 2.

(Received in evidence and marked "Plaintiff's Exhibit No. 2.")

MR. DAVIS: I offer in evidence as Exhibit 3—will you stipulate that these were bought in the open market from Mr. Miller within the period?

MR. DARBY: If you tell me that that is the fact I certainly will stipulate it.

MR. DAVIS: That is the fact. There is an affidavit on record to that effect and the young man is here who bought them.

MR. DARBY: I will stipulate it.

MR. DAVIS: I offer in evidence as Exhibit 3 a radio loud speaker which is of the smaller size and it is agreed that this loud speaker was bought from the defendant, just as it is, prior to the filing of the bill of complaint and since the issuance of the patent.

MR. DARBY: For the purposes of identification, Mr. Davis, I think this small size speaker is known as No. 15 and the larger size is known as No. 14.

MR. DAVIS: This was marked 15-B.

MR. DARBY: That is right.

MR. DAVIS: The speaker being identified by the No. 15-B.

(Received in evidence and marked "Plaintiff's Exhibit No. 3.")

MR. DAVIS: I offer in evidence as Exhibit 4 a second loud speaker identified as 14-B of larger size and it is likewise stipulated that this speaker was sold by the defendant prior to the filing of the bill and since the issuance of the patent.

THE COURT: The only difference with which you are here concerned being that of size.

MR. DAVIS: Yes.

(Received in evidence and marked "Plaintiff's Exhibit No. 4.")

MR. DAVIS: If the Court please, I have a printed copy here of the record in the Brandes case which I should like to leave with the clerk because there will be occasion to refer to it. I see no occasion to put it in evidence.

THE COURT: Then just let it be marked for identification without being offered in evidence.

(The same was marked "Plaintiff's Exhibit A for Identification.")

MORTON ARENDT.

MORTON ARENDT, called as a witness in behalf of the plaintiff, having been duly sworn, testified as follows:

DIRECT EXAMINATION BY MR. DAVIS:

I was trained in the public schools of the City of New York, studied for the bachelor of science degree at the College of the City of New York and graduated from the Columbia University with the degree of electrical engineer in 1898. From that date on I have practiced my profession in its various branches.

My present position is one of the professors of the Electrical Engineering Department of Columbia University. I have had experience in the designing of machinery practically all my life. I have designed electrical machinery for many manufacturing companies, designed electrical equipment for the United States Government.

With regard to having specialized in acoustics, I have not done so excepting in so far as it entered into my professional activities as for instance in advising the Bosch Corporation cooperating with the Dictagraph Products Corporation and in developing or cooperating in the development of the submarine signaling apparatus on United States submarines.

The occasion of developing that signaling apparatus was, I was connected with the United States Government as a commander in the United States Navy. I was in charge of and organized the electrical school for naval officers in 1917 and was in active charge of the electrical division of that school for a year, after which I was made technical aide to all submarine bases on the east coast and flotillas on the east coast, in the course of which problems in the development of listening apparatus were sent to me as to many other technical men throughout the country.

My work was in connection with the so-called oscillator, whereby you exchange the frequency of tones from time to time so as to vary general recognition of a vessel out at sea. I have lectured since 1902 at Columbia University in electrical communications, which naturally includes transmission and receiving apparatus.

I have read the patent here sued on and have examined two defendant's devices, Exhibits 3 and 4.

I had the drawings I now produce made under my direction by a draughtsman employed by Mr. Davis's

firm, and the drawing represents a plan view of the front of the "Fada" 15-B and 14-B loud speakers. I have given no dimensional values on the drawings themselves, but have lettered various dimensions and then later given their exact values.

Figure 2 of this sheet represents a sectional drawing, through either or both of the Fada loud speakers, wherein are indicated by letters the height of the theoretical cone from which this frustrum is obtained, the height of the frustrum, the diameter of the conical portion of the tympanum, and the outside dimensions of the tympanum where it is secured to a ponderous ring. The values in numerical figures for the smaller unit are given under "small speaker." *a* represents the diameter of the outside of the tympanum, which is eight inches wide. *b* represents the diameter of the conical portion of the tympanum. *c* represents the width of the annular portion of the tympanum which connects the conical portion to the rim.

e represents the height of the cone on which this structure was developed; and *d* represents the effective height of the truncated portion. The corresponding letters under the large speaker indicate the same portions. *f* indicates the angle between the sloping sides of the cone and the base, which, in the case of the small speaker is thirty-eight degrees, and in the case of the larger speaker is forty-three degrees.

The assertion that is printed on the drawing is as follows:

"The angle *f* of a cone whose altitude is one-quarter of diameter of its base is 26 degrees 34 minutes."

Directing my attention to the figure of the drawing of Patent No. 1,271,629 and particularly to the plane peripheral rim portion marked *l* on the question, what effect the width of that portion has upon

the flexibility of the support of the central conical portion, I would say if the width of *l* were made greater, that it would become more flexible. If it were shortened, it would naturally become stiffened, if of the same material.

THE COURT: *l* is what?

THE WITNESS: That is the rim portion which was here (indicating).

THE COURT: I got that; it is the rubber band in the Brandes?

THE WITNESS: It is the rubber band, yes, in the Brandes device.

THE COURT: In the Brandes device, yes.

THE WITNESS: Now, directing attention to lines 127 and following on page 2 of the patent specification, where the patentee says:

"Yet it is possible to form radial or concentric corrugations in the plane peripheral portion *l*."

On the question of what would be the effect of forming radial corrugations in the plane peripheral portion, they would naturally stiffen.

The effect of forming concentric portions in the plane peripheral portion would be that they would naturally lengthen it or produce greater flexibility.

MR. DAVIS: I now offer in evidence as Plaintiff's Exhibit 5 the sheet of drawings to which the witness has referred.

(Received in evidence and marked "Plaintiff's Exhibit No. 5.")

CROSS-EXAMINATION BY MR. DARBY:

XQ. 17. I can tell you that we agree with all of your measurements with the exception of perhaps two.

Your measurement *e* of both the large and small, which extends from the front edge of the cone to the apex of the cone if there was an apex, I find our measurements with the small speaker it is 2.867 inches as against your 2¾ inches, and I find that with the large speaker it is 4¼ inches instead of 4 inches, as you have it there. I would like to have you check that up again, if you will, please.

A. I shall be very glad to do so, sir.

XQ. 18. And likewise in Figure 2 of your drawing, I would like to have you give me the measurements for both the large and the small cone of the edge metal ring (indicating) or at least have you check up my measurements?

A. I would be very glad to check that from your drawings.

XQ. 19. And have you check up my measures on that in the large cone. My measurements are 8.250 inches and the small cone is 6.75 inches.

A. I have no such dimensions on my drawing.

XQ. 20. I know it.

A. Therefore I cannot check them.

XQ. 21. I merely wanted to get them on the drawing. Will you do that now, please, sir?

MR. DAVIS: I will have marked for identification this loud speaker of Brandes which is a replica of the larger one that was before the Court of Appeals in the Brandes case. Please mark that as larger Brandes loud speaker, and the second one, the smaller one, will be marked for identification as the smaller one.

(Received and marked "For identification Plaintiff's Exhibits B and C" respectively.)

THE COURT: You have the smaller one. So the large speaker which is Plaintiff's Exhibit for

Identification B, was that before the Court of Appeals?

MR. DAVIS: Yes, your Honor.

THE COURT: They were both before them?

MR. DAVIS: They were both before the Court of Appeals. It was precisely as it is here. They had one larger than nine inches and one that was smaller than nine inches.

THE COURT: I see.

MR. DAVIS: If the Court please, that is our *prima facie* case.

Defendant's Case.

DAYTON C. MILLER.

DAYTON C. MILLER, was called as a witness on behalf of the defendant, and being first duly sworn, testified as follows:

DIRECT EXAMINATION BY MR. DARBY:

I am sixty-three years; reside at Cleveland, Ohio, and I am Swasey Research professor of physics in Case School of Applied Science.

I had my first college training at the College at Ohio; took graduate course of study in physics and mathematics at Princeton University, securing the degree of doctor of science in 1890. Since that time I have been connected with the Case School of Applied Science, in Cleveland. I was for more than thirty years in charge of the Department of Physics of that institution, and at present have the title of Swasey Research professor of physics.

I have always been interested in music from my childhood, playing instruments and studying the history and science of instruments. In my professional work at the college, it has been a part of the laboratory experimentation to study the construction and properties of musical instruments of all kinds.

I have been especially interested in the phonograph and talking machine since its start. I have been directly connected in an experimental way with wireless and radio since the beginning.

I have been employed as expert adviser to a number of manufacturers of musical instruments, principally in relation to talking machines, sound-boxes and horns, and radio loud speakers and other musical instruments, and as to scientific societies, I am a member of the National Academy of Science, and the American Philosophical Society and the Acoustical Society of America and the American Physical Society. I can name others; there are twenty-six of them in all.

I am the author of quite a large number of scientific papers dealing with the subject of acoustics and sound, loud speakers, horns, and so forth; and I gave a course of eight lectures at the Lowell Institute in Boston entitled, "The Science of Musical Sounds," which later resulted in the publication of a book of that title.

I have had specimens of these two instruments of the Fada manufacture, Plaintiff's Exhibits Nos. 3 and 4, in my college laboratory for weeks. I have experimented with them and used them in radio reception, and I have had them in my home, using them in radio reception.

I am familiar with Hopkins Patents Nos. 1,271,527 and 1,271,529; I have known them for some years previous to this case, and studied them previously, as well as now.

Referring to the parent patent No. 1,271,527, which was the patent which was issued on the parent application, page 1, line 13:

> "This invention relates to instruments which reproduce sounds, such as the talking machine and the phonograph, and is particularly directed to the attainment of a direct propagation in free air from a record of self-sustaining sound waves substantially corresponding to the original recorded sounds in intensity or amplitude as well as in pitch and timbre," and so forth.

I understand from this language that it means the type of record used on talking machines and phonographs at the time the patent was issued, which consisted of records made in the form of discs, some of them made in the form of cylinders, in the earlier days, in which there are indentations in the material which caused the needle to move back and forward or up and down in such a way as to reproduce the sounds.

In reproduction of broadcast speech or music, there is no record in the sense here intended.

There is nothing recorded which a loud speaker, a radio loud speaker reproduces in the ordinary operation.

I next call attention to the language of the specification on page 1, lines 72 to 78, as follows:

> "It is an object of the present invention to regenerate the recorded sounds directly from the record, without the interposition of a confined body of air and without the employment of a restrictive transformer, such as a horn."

On the question of whether or not there is anything in a radio receiving system or even including the radio transmitting system, of a speaker or an

orchestra, corresponding to a record or recorded sound directly from which the loud speaker in a radio receiving set secures its actuating impulses, I would say that there is no material record. That is to say there is nothing recorded, permanently recorded in the radio system.

I next call attention to page 2, line 7:

> "I have illustrated in the accompanying drawings a sound reproducing machine embodying the several novel features of the invention as they may be employed in regenerating sounds from records made with either laterally or vertically sinuous grooves."

That refers, of course, to a phonograph record.

Phonograph records of two types were in use at that time and are to some extent today.

I was familiar with the phonograph art, between the years 1910 to 1914.

At that time I was serving as expert for one of the principal makers of talking machines, namely The Aeolian Company of New York, makers of the Vocalion talking machine.

As to the reproduction power of phonographs, phonograph records, as of 1910 to 1914, as compared to present-day phonograph records, there have been improvements in methods of recording and in methods of manufacture, so that the records of the present day are capable of delivering considerably more power than the records of fifteen years ago.

It might be as much as five or ten times as much power, so that a louder reproduction can be obtained today than was available at that time. That is the improvements have been in various parts of the reproducing apparatus, and in the records also.

In the science of acoustics the sound sensation is generated in the air by what we call the energy of the

sound wave, which consists essentially of condensations and rarefactions in the air impinging upon the tympanum of the ear. This energy is transmitted in the sound waves from the source, whatever that source may be, and the loudness of the sound varies in a general way with the energy contained in this wave. It varies with the amplitude and frequency of the vibrations.

With respect to the degree of loudness of any particular sound, that depends upon the energy which consists in those condensations and rarefactions, and is dependent upon amplitude and frequency.

That is to say that the compressions and rarefactions depend for their amount upon the amount of energy and that can be properly translated into terms of power.

In reproducing from a phonograph record, if the stylus needle moves just a very little bit—confining our discussion to power—you would expect a sound that would not be as loud as if the needle vibrated a greater distance, other things being equal.

On the question of pitch, the frequency of vibration determines pitch.

And if the vibration is slow the pitch would be low. If it vibrates very rapidly, it would be a high pitch.

In the phonograph art in 1910 to 1914, there was a practical limitation as to the minimum frequency that played substantial part in both the recording or reproduction.

In both recording and reproduction, the lower frequencies were recorded with less intensity in proportion to the higher ones, and sometimes with a very low intensity, in comparison with the higher notes. By low intensity, I mean as compared with the original sound, which was being recorded, it was not re-

corded in a properly balanced form, and the same was largely true of the reproducers that reproduce the higher frequencies; I mean from 200 up perhaps, reproduced those better in a more accurate manner than they did the lower frequencies.

That is true in a very much less degree today than it was before. There have been very great improvements in that respect, so that the lower sounds are recorded and reproduced in a more nearly proper proportion though not yet perfect in most cases.

I am familiar with the paper of J. P. Maxfield and H. C. Harrison, entitled, "Methods of High Quality Recording and Producing of Music in Speech, Based on Telephone Research."

They are gentlemen of good standing in the scientific and engineering field.

In this paper is a drawing designated Figure 20, appearing on page 252, entitled as follows:

> "Response frequency characteristic of two phonographs, curve A shows the characteristic of the band pass filter type described. Curve B shows the characteristic of one of the best commercial machines previously on the market."

This curve indicates in A the characteristic of the band pass filter type described in this paper, and it shows that frequencies above, about 115 up to frequencies of 4000 and more, are passed with uniform facility. The curve has what may be described in general as a flat top, these different frequencies being transmitted in about equal proportions as they ought to be when diagrammed in this manner.

Curve B, representing the commercial machines previously on the market, shows that such machines transmit very little energy, none at all, according to this curve, about frequencies lower than 240. Above

that frequency, up to 4000 and over, the transmission is more irregular than that shown by the curve A. That is in accordance with the statement made in a previous answer that the earlier machines did not transmit the lower frequencies in the desired proportion.

The results there shown are in conformance with my experience. I have experimentally observed the same conditions as are shown in these curves.

MR. DARBY: I offer in evidence the paper of Maxfield & Harrison entitled "Methods of High Quality Recording and Reproducing of Music in Speech, Based on Telephone Research," appearing in March, 1926, paper, the same being an abridgement of the paper presented in the mid-winter convention of the A. I. E. E., New York, February 8 to 11, 1926, referring particularly to page 252.

MR. DAVIS: I object to the admission of the paper for any other purpose than as identifying the witness's testimony.

MR. DARBY: That is the only purpose for which it is offered.

(Paper received in evidence and marked "Defendant's Exhibit No. 7.")

THE WITNESS: As to the amount of power available to vibrate a sound reproducer from a phonograph record in 1910 and 1914, as compared to the amount of power available to vibrate a sound reproducer in a radio loud speaker of today, I have this to say, the present-day radio loud speaker, using the amplifiers that are ordinarily provided in the receiving sets, and taking advantage of the methods of driving the sound reproducer diaphragm in the loud speaker that is available for the reproduction of sound in the loud speaker, as compared with that available in the talking machine

of 1910 to 1914 and the amount of energy or power, that is a thousand times greater; it may be in some instances 10,000 times greater; that does not mean that the amount of sound delivered is a thousand times as great or ten thousand times as great. It may be ten times greater or one hundred times greater, but the power available to operate the sound reproducing apparatus is perhaps a thousand or maybe ten thousand times greater than that that was available to operate a talking machine apparatus at the period referred to.

In both of the Hopkins patent, there is shown in the various drawings a direct mechanical connection for transmitting the vibrations from the stylus to the cone.

The dynamic speaker of the present day uses an electro-dynamic principle that was devised more than 100 years ago. It is a principle that a magnetic field may be produced by a current passing through a coil of wire so that a strong magnetic field is produced inside of this coil. In the construction that we have here in the Fada loud speaker attached to near to the apex of the cone, the frustrum of the cone, is another coil of wire which is arranged to be supported in the interior of the outer or field coil.

The field coil is energized, made magnetic, made strongly magnetic, by connecting it to the current supply of the electric lighting circuit. The variations of the current from the radio loud speaker from the coil attached to the paper causes the coil attached to the paper to move back and forth in the field of the field coils and by proper design making the field magnets powerful, they being supplied by separate electrical energy from the lighting circuit, and the design of the smaller movable coil attached to the paper is such that when it is in radio operation the force moving the vibratory part of the reproducer can be made very

powerful and a reproducer in which there is the field coil separately energized of the movable coil attached to the paper so that it can move in and out in response to the electro acoustical vibration is called a dynamic speaker and the amount of energy available to drive the vibrating diaphragm is very greatly increased in this manner and the Fada reproducer is of this dynamic type.

Referring to the structure of the Hopkins patent shown in the patent No. 1,271,527, for example, Fig. 4, the needle is in contact with the record.

In Fig. 2 the needle is out of contact with the record showing how a record can be removed.

In the position shown in Fig. 2 where the needle stylus is removed from contact with the record that the needle and the levers connecting the needle with the vertex of the cone are held in their normal positions by the cone itself, which further is supported at its edges. The structure shown in the patent which permits the movement of that assembly from one position to the other whereby it can hold its position where moved consists of the following:

There is perhaps first the massive rings which in Fig. 4 are lettered K,K′.

They are the rings that are called ponderous rings in the patent.

Those rings clamp between them the periphery of the cone L in such a way that it is supported in its normal position, but is subject to such vibratory movement as is desired in the reproduction of sound.

Attached to the vertex of the cone is a fixture, probably of metal marked M to which is attached a slender metal rod running upward in picture 4 until it joins another rod horizontally placed and connecting the vertical rod from the vertex of the cone to the needle which is pivoted on the other end of the tube marked G.

When the stylus moves, its vibratory movements are transmitted through the horizontal rod at the joint there which is shown in another figure in more detail, in Fig. 6, in such a way that the horizontal movements from the needle, horizontal as we look at the pictures, horizontal movements from the needle transmitted by the rod S′ to the joint at S and then through a pivot and connecting parts to the vertical rod V, which in turn connects to the vertex of the cone. These various parts are maintained in their normal operating position through the cone which as I have said is itself in turn supported in the ponderous rings K,K′.

If the structure did not have the rings K,K′ it would dangle freely in the air and these parts would fall out of their normal position when not in use and if there were no heavy ring around the periphery of the cone it would not operate to reproduce sound at all even when the needle vibrated in the record and even if the parts were properly suspended.

It is necessary to establish inertia or unmovable parts around the edge of the cone in order that the rest may vibrate back and forth. The inertia of the periphery of the diaphragm is a necessary feature in all talking machines and photograph reproducers in sound boxes and it is here. That is provided in this case by these heavy rings.

Not only are these rings essential in the Hopkins structure, but it is necessary that they should have a substantial amount of mass for the proper operation of the machine.

As to what parts shown in the patent move as a unit when the needle is moved on or off of the record, taking Fig. 4 for example, I would say the whole framework, the supporting rings K,K′ and the parts J that support them, the vertical tube marked G and the horizontal tube G, which support within themselves the

lighter levers. The whole must tilt in the manner shown in Fig. 2.

There is a Gimbel mounting provided and so described so that this can lift off the whole part of this reproducing apparatus including the sound reproducing diaphragm and its supporting frame can be lifted bodily without displacing parts relatively one to the other.

Q. 47. Now, let us come back again to Patent No. 1,271,527, page 2, line 128. The Hopkins patent states:

> "A tympanum L of light vibratile material has an annular plane peripheral portion *l*, the outer edge of which peripheral portion or supporting rim *l* is tightly gripped and rigidly supported between the ponderous rings K,K′ and a central conical portion *l′* rising from the inner edge of the annular plane peripheral portion."

There seems to be some dispute as to what is meant by tympanum. I will read you a definition of this term which was advanced to the Patent Office on February 5, 1915, as appears in the file wrapper of this patent we are considering.

> "We respectfully solicit a careful consideration of the new claims 11 to 16 inclusive, which have been redrawn following somewhat the form of Claims 1 and 2 to define a tympanum of such area as to produce directly regenerated sound waves substantially corresponding in intensity or amplitude to the recorded sound waves."

Do you agree with that definition of tympanum as employed in the patent?

Mr. Davis: I object to that question as irrelevant on the ground that whatever may have been said in argument to the Patent Office is irrelevant

to the present discussion. The law in this circuit and of the other circuits, as I said the other day, is to that effect, I think, without exception.

MR. DARBY: I think I will point out some exceptions to Mr. Davis and I do not think that that is the law. I agree with Mr. Davis that a great many decisions on the proposition of the value of a patent file wrapper for use against the patent is limited to estoppel, but I do not agree with Mr. Davis as to what constitutes the estoppel. I have got authority for it specifically in this particular case by the two decisions outstanding now of Judge Bourquin and Judge Hickenlooper right squarely on this case. I think there are plenty other authorities that on the question of estoppel you can use any part of the prosecution.

THE COURT: What have you to say to those two opinions?

MR. DAVIS: I say they were wrong. They were contrary to the decisions of their own Courts of Appeals, and perhaps your Honor is not so particularly interested in that as in the decision of this Court of Appeals. I have a memorandum at the hotel on the subject. There was a case in our circuit just the other day, within the last two or three months, in which Judge Hand, after saying that the Court of Appeals had said half a dozen times that it would not consider the discussions between the solicitor in the Patent Office, said, "We say now once again and finally that we will not under any circumstances consider those discussions," citing a lot of cases, and I ought to be able to remember the case in this circuit, but it slipped my mind for the moment.

THE COURT: I am not sure, but I rather think that I sat in the Circuit Court of Appeals, and I am not sure whether I sat in the case or simply remember it. My recollection is, and I am not certain about it, about the limitation upon that point, but I think that my recollection is that the law in this circuit as laid down by the Court of Appeals is as Mr. Davis states it. However, rather than to foreclose you by sustaining the objection in making such contention with regard to the law as you may deem proper, I will let you take the answer, but I think the burden with respect to the law will be upon you, Mr. Darby.

MR. DARBY: I will accept the burden.

THE COURT: You may have an exception to save all your rights. If the law is as you suggest, Mr. Davis, the taking of the facts will not make any difference.

MR. DARBY: I might say this, that I was looking for a concise definition of the word tympanum and this language was very concise and clear and it comes to me as a surprise that Mr. Davis questions it.

THE COURT: As I understand it, you find that definition satisfactory to your purpose and you are incorporating it here by reference regardless of whether it has any effect by way of estoppel or not.

MR. DARBY: Yes, sir, that is the purpose.

(Last question repeated as recorded.)

A. This is not a definition of the term. It is a description of what the tympanum of the patent is presumed to do. It is a sound-reproducing area which does reproduce sound.

THE WITNESS: Referring again to this paragraph that we are discussing and particularly the first few words: "A tympanum L of light vibratile material," refer to Fig. 3 of the patent. The tympanum consists of the conical portion *l'* together with the flat annular portion or peripheral portion *l*, which in effect is continuous with the cone, the tympanum therefore consisting of the light vibratile material forming all of the material which is inside of the clamping rings K, K'. Every part of it is of light vibratile material as described and shown. Every part of it is capable of vibrating and producing sound.

Referring to the Fada loud speaker, the tympanum is that vibratory part which is effective in reproducing sound waves. In the Fada structure it consists of the conical portion with the vertex of the cone cut off where the coil wire is attached, so that it is the frustrum of the cone and as an affective tympanum it ends at the edge of the cone.

The vibratile material ends at the edge of the cone. The cloth rim which connects the edge of the cone with the baffle rim is not vibratile material in the sense in which I understand that word to be used for the purpose of giving out sound waves.

As compared with a vibratile material to give out sound, the cloth is a pliable material. In contrast to what has been referred to as vibratile material, it is not a vibratile material, but a pliable material. It is a porous material and being pliable and porous it is not a suitable material for generating sound waves in the air as are required for the production of sound.

The fact that it is not so suitable is taken advantage of in the construction of many musical instruments; in pianos felt is used in many places to dampen out the sound and absorb them. In the treatment of auditoriums for acoustic purposes where it is desired to absorb the sound, it is found that a porous pliable

material will absorb the sound and does not reproduce them.

Going back to the same passage that we are reading from, it is stated, line 130, page 2: "The outer edge of which"—referring to the tympanum or the annular plane peripheral portion of the tympanum—"The outer edge of which peripheral portion or supporting rim *l* is tightly gripped and rigidly supported between the ponderous rings K,K'."

The tympanum of the Fada structure is not tightly gripped between any ponderous rings, in my opinion. The tympanum of the Fada structure is not provided with any supporting rim of the same material as that of the tympanum. It is not provided with any supporting rim of vibratile material capable of giving off sound.

Referring to Plaintiff's Exhibit 5, the diameter of the tympanum, as I interpret it, is that marked in the drawing Fig. 2 by the dimension lines *b* and I have no rule here to measure it, but if I take them from the figures which are on the drawing for the small speaker the diameter of the tympanum is seven inches and for the large speaker 8½ inches.

The patent states, page 3, line 5:

> "If satisfactory regeneration of sounds from a record is to be had, the whole diameter of the tympanum, that is, the diameter of the aperture in the rings K,K' should exceed nine inches in order that the conditions shall be fulfilled which are required to regenerate the sound waves in the manner above described."

I have this to say as to the question of size of a vibratile tympanum, at least as to any minimum size of a vibratile tympanum in the acoustical art:

In order to regenerate the sound waves it is necessary that the waves of compression and refraction in

the air be reproduced or regenerated in such a manner as to contain an amount of energy which when transmitted by the waves to the tympanum of the ear will give the sensation of a sound substantially equivalent to the original source of the sound.

It is the amount of energy which is received by the ear which determines whether the sound thus received is a proper reproduction or regeneration of the original. This amount of energy can be secured from different areas of vibrating diaphragms or tympanum in the reproducing apparatus.

If the amplitude or the actual power per unit area is small, the diaphragm may have to be large in area and move through a small distance in order to reproduce this sound. In another case, if the diaphragm of the reproducer can be made to vibrate through a much larger amplitude, it may be very much reduced in size and yet generate waves of sufficient intensity to reproduce the sound as heard by the ear in its original intensity, and there is no fixed definite size of diaphragm that is required for the purpose of reproducing sound.

There is for any given conditions an adjustment between the power of the reproducer and the mass inertia of the moving diaphragm and its area and its freedom movement and so forth, an adjustment between these various parts, so that an adequate reproduction can be secured, but there is no essential diameter which is required for this purpose. A small diaphragm may reproduce loudly under proper conditions, as loud or louder than a large diaphragm, and in many cases with equal perfection of reproduction.

If any such theory, as that size alone is a controlling and determining factor, is or has been advanced, I would disagree with that theory.

The device I now produce consists of a paper cone about two and a half inches in diameter, the simple cone, attached to a magnetic unit and its outer edge is

connected with the frame by means of a soft leather or chamois skin periphery ring which serves as a baffle. It is in fact simply a small cone of paper not over two and a half inches in diameter mounted in the form of a loud speaker and this will reproduce a sound.

(At this point a demonstration was performed.)

MR. DARBY: I offer in evidence the two and a half inch cone loud speaker.

THE COURT: It is admitted without objection.

(Received in evidence and marked "Defendant's Exhibit No. 8.")

THE WITNESS: This two and a half inch loud speaker is provided with a magnetic drive. It is attached to the armature of a magnetic unit. The magnet is another type of driving unit for radio loud speakers in which the diaphragm is moved by means of an armature attached to it by light driving rods, the armature playing between the poles of a magnet.

MR. DAVIS: If you just say as distinguished from the dynamic type which I have already described.

THE WITNESS: As distinguished from the dynamic type which I have previously described.

The magnetic type in general is a smaller type and in general somewhat less powerful.

This two and a half inch cone has been set up in the form of an ordinary radio loud speaker.

I have had the specifications of the Brandes loud speaker but have not had it in my laboratory. I have examined the Brandes form of loud speaker which Mr. Davis has put in evidence as Plaintiff's Exhibit C for Identification as illustrating the cone structure

which was before the Court of Appeals in the Brandes case, and on the question as to whether or not the rubber ring interposed between the cone and the supporting ring is of vibratile material, I have this to say—The rubber is a non-porous material in the sense in which we use the word porous. It differs distinctly from the cloth in that if it is vibrated it would transmit its vibrations to the air. As mounted in this apparatus the rubber rim is very slack and its frequency of vibration will be so low that it will not attribute essentially to the acoustical output. The material, however, would be a vibratile material of varying frequencies, depending on the tension under which it happens to be placed and in that sense it is more vibratile than the other.

If the slackness were taken up by a tension its power to transmit sound to the surrounding air would be increased.

In the Brandes structure the surrounding ring does not support the cone through the medium of the rim.

The cone is supported from its apex by an attachment to the driving unit.

The rubber here in this thing here is substantially non-porous. And in that respect it is different from the cloth rim of the defendant's structure. In making the cloth ring of the defendant's structure a dampener or softener as compared with the vibrator or sound producer, its porosity is an important factor, a principal factor.

The character of the material and the character of the cloth play a part.

Returning once more to the patent, page 3, line 39 of Patent 1,271,527, this statement appears:

> "The conical shape is given the tympanum so that shocks or vibrations impressed upon the apex of the cone in a direction towards its base will move the whole cone bodily, the strains being imparted edgewise of the material and no wave mo-

tions being set up in the thin material of the cone. The curvature of the walls of the cone preclude the setting up of waves in the material and the intended object, a simultaneous movement of the whole conical portion of the tympanum, is attained."

I do not believe that language needs any explanation.

I understand what is intended to be meant by it. In normal use in radio reception the Fada cone does have waves set up in the body of the cone itself with the formation of nodes and loops.

I have examined many patterns made of Fada cones illustrating that.

Q. 85. I would like to have you demonstrate a slightly larger cone and please describe that cone structure.

THE COURT: In the last exhibit was the diameter given, the entire opening of the wood or was it the cone?

Q. 86. The entire opening of the wood?
A. No.
Q. 87. What was the diameter that you gave?
A. The diameter of the paper cone itself.

By THE COURT:

Q. 88. Not of the opening of the wood?
A. No.
Q. 89. Which contained a band around the wood?
A. Ring of leather around it.

By MR. DARBY:

Q. 90. That was just the cone itself?
A. Yes.
Q. 91. Did you include the leather?
A. I did not, but just the paper cone.

MR. DARBY: The entire diameter of the paper cone plus the leather ring is 3⅛ inches in Exhibit 8.

THE COURT: And the cone itself was what was given by the witness.

MR. DARBY: Yes.

By MR. DARBY:

Q. 92. Will you give us both of these measures in this structure, please?

A. The paper cone in this case is about 3½ inches and the opening in the front board is 4 1/16 inches. It is bevelled inside and is slightly larger where the leather touches it, about 4⅜.

(At this point a demonstration was performed.)

THE WITNESS: On page 3 of the Hopkins patent, line 24, appears the following statement:

> "The plane peripheral portion *l* of the tympanum maintains the place of the conical active portion of the tympanum and yields sufficiently to permit of the required motion of the conical portion, resisting, however, displacement of the conical portion in just that degree necessary to maintain the form and neutral position of the active conical portion."

The Fada cone is supported in its natural position and restrained just in the degree required for its movement in the production of sound by means of a spring arrangement consisting of three arms attached at one end to the vertex of the cone, the frustrum, and at the other end to rigid supports connected with the main base or frame, and it is the tension of this spring that maintains the cone in its neutral position.

The rim of cloth around the edge does not contribute to the maintenance of the cone in its neutral position, they lying in a flat plane and under the ordinary condition of construction they do not exert any force on the front and back, so that it is maintained by these three springs attached, and it would be so supported and in operable condition with the cloth rim entirely removed.

When the cone is forced forwardly or rearwardly in accordance with its movement, a very slight tension will be exerted on the ring, but in its neutral position it is not supported.

In the Hopkins patent this statement is made:

> "The peripheral portion *l*, the plane peripheral portion *l* of the tympanum maintains the conical active portion of the tympanum and holds sufficient to permit this required portion, the conical portion in just that degree necessary to maintain the form and neutral position of the active conical portion."

That description from the patent describing the Hopkins structure, does not fit the Fada structure.

The function of holding the Hopkins cone in this neutral position, which function is performed as stated by the patent, by the plane peripheral portion of tympanum is essential in my opinion to the successful operation of the Hopkins device.

THE COURT: Are you answering that mechanically, speaking from a mechanical standpoint?

THE WITNESS: I am speaking of the technicality of the patent.

THE COURT: All right.

Mechanically speaking, the cloth rim of the defendant's structure does not perform that function.

As I interpret it, the cloth rim in the Fada device serves to hold the paper cone against the force of gravity from such sagging as might take place on account of the flexibility of the central springs. It also prevents a certain amount of the weaving or fluttering at the edge, but does not exclude the formation of segments in the body of the material. Its chief function is probably to close the air gap between the edge of the cone or tympanum, and the ring around it of the housing, to form in connection with the casing what is commonly referred to now as a baffle. It prevents the leaking of the sound waves which consist of compressions and rarefactions and prevents the leaking of these around under the back of the cone or diaphragm, and thus increases the acoustic efficiency of the apparatus, and also improves tone quality. This baffling effect is an old principle but it is being made more prominent in every day use by the much larger power that is being applied to reproducers at the present time.

MR. DARBY: My attention has been called to the fact that I failed to offer in evidence the second cone of the small type, which we demonstrated and I now offer it in evidence.

(Received in evidence and marked "Defendant's Exhibit No. 9.")

With reference to the testimony that I have given with respect to what effect size has on a reproducing diaphragm in acoustics, the statement which I intended to make was to the effect that there is no critical size which is essential to a proper reproduction of sound. A proper reproduction I understand means that when a person is speaking, the sound is received by a microphone, for instance, and it then goes from the broadcasting apparatus, is transmitted by radio, and is picked up by radio receiving apparatus, and is

reproduced at some distant point, by the loud speaker, and an adequate reproduction is one in which the person listening to the loud speaker far away, shall hear in its essential acoustic quality and characteristics, the orginal song, which may be speech, or music, or something else. The most critical conditions are involved in speech and in musical reproduction.

It is quite certain that if we hear an adequate reproduction, a satisfactory reproduction, that the sound waves which come from the loud speaker to the ear at the receiving station, must correspond as closely as is required to satisfy our judgment in the matter—must correspond to the sound waves originated at the source by the original speaker or the original music, and they are both of them acoustic waves; they are waves in air at the source and equivalent waves to the degree in which we are satisfied, and in modern reproduction we get beautiful effects under good conditions.

So that the waves reproduced in that receiving station are acoustically equivalent to the waves in the first station. The waves in the first station must go into the microphone, acoustically speaking, the waves must be impressed upon that. That microphone then must vibrate in an acoustical sense in such a way that its vibrations contain the essential characteristics of the orginal sound waves; and that microphone, as now used, in the best service, is about three inches in diameter, sometimes less, I do not know of them as being any larger. I have seen some very recent ones, and the best ones, so that a three-inch diaphragm in a transmitting microphone, the pick-up microphone must vibrate with the essential characteristics, acoustically speaking, that represent the original sound waves, and those are transmitted by whatever process we like, to the distant station and the electro-magnetic disturbances are reproduced in the loud speaker, and come out of this diaphragm.

Now, if the three-inch diaphraghm of the microphone transmitter can vibrate acoustically in accordance with those waves, there is no essential acoustic reason or mechanical reason, why a three-inch diaphragm at the receiving station, should not also be made to vibrate in equally perfect acoustic respects, so as to reproduce a corresponding regenerated sound wave at the distant station; and furthermore, telephone diaphragms are all of them less than three inches, so far as I know, and we get acoustic effects from air waves, strictly acoustic, into the transmitter of the telephone, into the small diaphragm; and the fact we put it to our ear does not change the characteristic waves of that sound. We can hold it away from our ear. Loudness is no matter, but we reproduce the true characteristics of those sound waves from the telephone receiver, which uses a diaphragm that is not large, and still another illustration is a phonograph in the talking machine, where the records are made with a recording device which has a small diaphragm which might contain acoustic vibrations, corresponding to the original sound wave. So the argument is that the mere size of the diaphragm does not preclude proper vibrations of the kind to correspond to the original spoken sound or musical sound; that is, the size can be adjusted to other factors so as to obtain correct reproduction.

The satisfactory loud speakers of the present time so far as I know all have a baffle, either in extended plane surface extending out some distance two inches or a foot or more on each side, or the speaker is inserted. This part of the speaker, the chassis as it is called, is inserted in a casing or housing or cabinet and closed up with it in some such a way as the housing or cabinet forms a baffling, such a baffling of sound waves is theoretically in the study of acoustics a very old requirement.

The Fada loud speaker is not intended to be used in the open air, and I will say is never used in that fashion, as a completed instrument. They might use it in a laboratory for pure experimentation for any given purpose; if we wish to hear adequate reproduction and reproduction in the laboratory, we must apply a baffle, and this outer felt ring is intended to be pushed up against the housing or casing in that way, forming a baffle. This can be illustrated by the Fada instrument which is here, by the way. The effect of baffling can be shown by sounding it outside. Is it to be demonstrated?

I recognize the cabinet produced as a standard Fada cabinet. I will describe it.

There is this opening in front through a grill work here, but which is in effect a circular opening in the interior. The grill work is merely ornamental on the outside. It has a circular opening of such a size that when the unit is inserted, the felt ring, the thin flat felt ring on the outside of this mounting comes up against the front of the box in such a way as to make a moderately air-tight closing and produces a baffle, the sides of the cabinet completing the baffle. There is also a certain amount of resonance effect produced by this cabinet, but the baffling is the first and most essential part; and the removable rear part of the cabinet, is perforated in such a way that it allows sound to come from the rear. It has a very slight acoustic effect undoubtedly, but hardly noticeable.

There is no opening to the atmosphere in the top, bottom, or sides, other than the front and rear which I have mentioned.

MR. DARBY: Will you please work the Fada without the cabinet. (Demonstration of music.)

I will describe the effect the cabinet had on the quality of the sound.

The cabinet acting as a baffle, and as a resonator improves the general distribution of the tone intensity over the different pitches, so that with the cabinet attached, the lower frequencies which form the foundation of the musical tones, the lower frequencies are more prominent, forming a better balance throughout. The general effect is an improvement, that is also upon the whole been rather louder with the cabinet, because the sound waves are not dissipated by leaking around the back and the interference effects.

MR. DARBY: I offer in evidence the standard Fada cabinet for use with the Fada small type of speaker in suit. At Mr. Davis's suggestion I offer in evidence the small Fada unit employed with the last demonstration.

THE COURT: The small unit comes in as Exhibit No. 10 and the cabinet as 10-A.

(The unit was received in evidence and marked "Defendant's Exhibit No. 10." The cabinet was received in evidence and marked "Defendant's Exhibit No. 10-A.")

Referring to the dimensions of the two Fada structures, in the larger cone, the altitude is equal to one-half of the base, that is 50 per cent. and in the smaller cone, the altitude is just over two-fifths of the diameter of the base of the cone, expressed in per cent., 41 per cent.

THE COURT: Is that to the apex?

THE WITNESS: That is to the apex, if it were carried out to a complete cone, that is the measurement from the plane of the base to the apex of the cone.

Q. 112. And the altitude of the cone is always measured to its apex, is it not?

A. If you speak of the cone, yes, that is correct.

MR. DARBY: I offer in evidence a folder of prior art patents and publications consisting of—does your Honor care to have me read on the record the patents included in the folder? They are all bound together.

(The folder of prior art patents and publications was received in evidence and marked respectively "Defendant's Exhibits 11 to 11-L" inclusive.)

THE WITNESS: Briefly describing the structure illustrated by these patents—the first patent that I call attention to is by Maxwell, No. 216,051, dated June 3, 1879. This patent describes the formation of a cone or reproducing sound, the cone being formed of paper or other material. It says, on page 1, two-thirds of the way down, in column 1, the lines are not numbered—

> "The sounding boards may be made of soft pine wood or any other suitable material and have openings in their central portions over which the vibrators are to be fastened, and should be mounted upon suitable supports all enclosed in suitable boxes, and should be made quite thin in order to increase their capacity for vibration."

This is referring to the surrounding box or casing similar to what I have recently referred to as the baffle.

> "The vibrators are made of sheep skin or like material and should be fastened upon the sounding boards over the openings therein, while in a wet and plastic condition, and then have their central portions drawn out and stretched until they assume a funnel-like formation, and then be allowed to dry and retain that form."

The patent states in the last column of the second page:

> "I have found also by experiment that a vibrator that is from 7 to 8 inches in diameter through the center from one outer edge to the other is the most efficient, and when they are left smaller than this, the vibration made by the vocal organs are of a nasal character, but in each apparatus provided it is used at one end of the line——"
> Here referring to a telephone transmission—
> "a very much smaller one may be used at the other without impairing perceptibly the effect."

Q. 114. This describes the formation of the sound reproducing diaphragm from a thin material put into a conical form by stretching and drying, and we have such a cone made in accordance with the dimensions and descriptions of this patent, which is to be demonstrated.

MR. DARBY: I will operate this cone referred to by the witness. (Demonstration.)

THE COURT: Won't you tell me about that, Mr. Darby? The sound portion, is that facing the clock, is it not, that is the vibratory portion?

MR. DARBY: It is built exactly in accordance with the patent.

THE WITNESS: The patent describes the double cones and also a single one.

THE COURT: That is like figure 1?

THE WITNESS: Yes, sir.

MR. DARBY: Yes, mounted of course with radio loud speaker equipment.

THE WITNESS: This patent as I understand it, was thought of at that time as constituting a telephone

transmitter and receiver, consisting of two cones, one at one end, one on the other, which would be represented in this model; one of the cones alone would be used as a transmitter or as a receiver and a single cone built according to the same specifications is in the other box.

MR. DARBY: I offer the model of the Maxwell patent with radio loud speaker in evidence.

(Received in evidence and marked "Defendant's Exhibit No. 12.")

Q. 116. Will you describe the second structure?

A. The second structure is made in accordance with the teachings of this patent of Maxwell, consisting of a single cone of bladder attached to the round opening in what he calls the sounding board, and is then stretched, and in this case, it has been covered with this varnish which stiffens it a little without much adding to its weight, to show that a cone of this kind of material will give a good tone quality.

MR. DARBY: I offer this last second model of the Maxwell structure in evidence.

(Received in evidence and marked "Defendant's Exhibit No. 12-A.")

THE WITNESS: The next patent to be referred to is that of Damm & Lapp, No. 338,660, dated March 23, 1886. I wish to call attention to such features as seem to apply to the arguments under consideration. He says on the first page, line 14:

"The object we aim at and have attained is the production of a loud speaking instrument capable of operating with a minimum expenditure of battery power or electro-motive force."

This was in connection with a telephone transmitter. In line 33 he says:

"The sheet metal diaphragm A is constructed with a central conical portion A which may be formed integral therewith or made separately and attached by soldering, brazing or any other suitable manner. The diameter of the base of the hollow cone may vary considerably"—and so forth.

On page 2, line 44:

"A still further advantage attends the use of the cone since it is capable of withstanding the pressure and thrust to which it is subject in connecting on the attached lever, and hence the diaphragm is made correspondingly more durable than if constructed in the usual form."

Now, in line 60:

"Our improved diaphragm is applicable to other telephonic instruments besides transmitters."

Next, at line 80, page 2:

"It is also expedient to employ dampers or elastic pressure plates as shown in the drawings, to limit the vibrations of the diaphragms and choke out the metallic clamp-using the dampers or baffles for one of the purposes which we have been describing in our testimony."

With respect to the dampening that I have read from in connection with this patent, damping of the kind here described would, in a considerable degree, lessen the fluttering of the edge of the cone and increase and produce a desirable effect.

It is possible to effect dampening in varying degrees in proportions by attaching a paper or soft leather or rubber ring around the edge of the cone and attaching this ring to the framework, to attach a piece

of soft felt to the casing and then push the free edge of the cone into slight contact with such a felt ring. It is possible to secure a certain amount of damping in the sense of preventing the fluttering by simply pasting a piece of felt on the cone itself around the edge of the cone, and thus improve the quantity of the tone which will be obtained from the cone.

These two diaphragms of different sizes are made in accordance with the description and the drawings shown in the patent consisting of the conical portion and the flat periphery rim.

MR. DARBY: I offer the two structures in evidence, coupled with the statement that the patent says nothing about it.

(Received in evidence and marked "Defendant's Exhibits Nos. 13 and 13-A," respectively.)

THE WITNESS: Considering the Stroh Patent No. 3393, this patent describes a diaphragm for use on phonographs and musical instruments and other sound-producing and recording and transmitting apparatus which consists of a conical central portion in metal or other suitable material and has a surrounding periphery portion which is described as being made in three different forms.

One is a flat peripheral portion shown in Fig. 3 and another is largely flat but has one or one and a half corrugations, and in Fig. 1 it is shown with several corrugations, the purpose of the corrugations in addition to their effect produced by the ordinary flat portion is to permit the central conical portion to move back and forth in the direction of sound.

This instrument is again a diaphragm of moderate size and has been used for musical purposes in connection with the Stroh violin, which has actually been used in making phonograph records, commercial records for

sale, and is a diaphragm of moderate size made in this form.

I have seen a Stroh violin. I have heard it in actual use. I have seen it in use by artists performing upon it. I have heard it in the laboratory many times. It is an instrument such as is here before us. It has this diaphragm to which is attached a horn. Its usefulness in connection with recording is that it will direct the sound of the violin more directly into the recording apparatus which is found advantageous in that case.

The point of argument that I wish to make from the introduction of this idea is that this diaphragm with the central conical portion of this rim, which in the patent is described as perhaps being flat or conical, either one, to permit this, and the argument to be made from this is that this instrument has actually been used for the reproduction of first-class musical records which have been commercially sold. This instrument was so used until recent times.

I have said that the horn was directed more into the recording apparatus and it has been found more effective than trying to get a violin alone. In the recent recording devices, the electric recordings, as they are called, it is found satisfactory to use the violin direct.

MR. DARBY: And I might tell your Honor that this identical instrument has been used by the Victor Company in its recording since 1904.

THE COURT: Does Mr. Davis concede that?

MR. DARBY: Yes, sir, it is stipulated. Your Honor will get an idea of how it works.

(At this point Mr. Darby played a tune on the Stroh violin.)

MR. DARBY: I will ask to have the Stroh violin marked for identification inasmuch as it will be

offered in evidence in connection with some stipulated testimony.

(The same was marked "Defendant's Exhibit C, for Identification.")

THE WITNESS: These three diaphragms I produce are made in strict accordance with the three different figures of the Stroh patent.

MR. DARBY: I offer in evidence the three diaphragms corresponding to Figs. 1, 2 and 3 of the Stroh patent.

(Received in evidence and marked "Defendant's Exhibits Nos. 14, 14-A and 14-B," respectively.)

THE WITNESS: Taking up the publication of Starling & Cole, the structure shown is a conical reproducer eight inches in diameter, about, and two and a half inches in height, preferably made of paper.

Those figures are given in the article, the diameter about the middle of the first column of page 1 and near the end of the article in the second page is that it may be set up in cardboard but that paper is the material that has been found most suitable. Such a cone as this eight inches in diameter is here shown as a talking machine reproducer acting in the open air, the edge of the cone being entirely free.

I have examined the paper cone I now produce and it is made in accordance with the description here given.

MR. DARBY: I offer in evidence the cone made in accordance with the Starling & Cole article.

(Received in evidence and marked "Defendant's Exhibit No. 15.")

THE WITNESS: I have examined the two cones that I have in my hand and determined that they are made in accordance with the Starling & Cole article except that they are provided with attachment means at the vertex of the apex of the cone instead of a needle means.

MR. DARBY: I will ask that this be connected to a radio loud speaker equipment.

(At this point a demonstration was performed.)

MR. DARBY: This is demonstrated now with a baffle over it. (At this point a further demonstration was conducted.)

Now I would like to demonstrate what increasing the laboratory power on the instrument, what effect it has on the cone. (At this point a further demonstration was conducted.)

Increase the power. (At this point a further demonstration was conducted.)

THE WITNESS: With the increased power the edges of the cone are fluttering, weaving it is sometimes called, and that introduces a disagreeable paper rattling sound in a cone of this structure.

That is sometimes referred to as blasting. It is weaving. Blasting is an excessive power that destroys the proper tone quality and that is one method of producing it, by weaving or fluttering of the edge.

THE WITNESS: The cone which I now have in my hand is of the same construction exactly, except that this has a rim of felt cloth around the edge of about three-eighths of an inch wide.

By THE COURT:

Q. 138. Around the inner edge?

A. The outer edge on the inside of the cone, and that reduces the amount of this blasting or fluttering

effect as can be shown by starting this in operation and changing the cones without changing the adjustment.

(At this point a further demonstration was conducted.)

MR. DARBY: I offer in evidence the Starling & Cole cone provided with a chuck to permit attachments to the vibrating pole of the radio loud speaker.

(Received in evidence and marked "Defendant's Exhibit No. 15-A.")

MR. DARBY: I offer in evidence the Starling & Cole cone provided with the felt damper at its peripheral edge.

(Received in evidence and marked "Defendant's Exhibit No. 15-B.")

MR. DAVIS: I am not at all sure that the record is going to tell us whether the demonstration matches up with the two cones, and if it does not may it be agreed that Mr. Darby and I will fix it up.

THE COURT: I thought probably you would ask the witness whether his prophecy was carried out.

MR. DARBY: I will do that.

By MR. DARBY:

Q. 139. Will you please briefly state what effect in actual operation was observed when you, with the same power, used the cone with the felt damper?

A. The quality of the sound was appreciably improved when the cone with the felt strip around the edge was used, due to a lessening of the higher frequency sounds and a relative enhancement of the sounds of lower frequency, giving a better balanced musical reproduction.

Now, referring to the Kraemer Patent No. 890,142, this patent was referred to in the prosecution of the Hopkins patent and it seems to me that it merely shows a truncated cone with a flat peripheral portion. I do not know that there are any peculiarities that need to be emphasized.

Now, referring to the Lumiere Patent No. 986,477, I call attention to the statement on page 1 of the paragraph beginning at line 67, which refers to bringing the surfaces of a vibrating body into a condition of molecular stress by torsion.

I understand by that expression in the construction here shown in the patent the paper is taken and so folded and formed that it is twisted in such a fashion as this, so that there is a torsion produced in this sheet of paper which puts the paper somewhat under tension and makes the surface a curved one, thus increasing its rigidity. It is a more rigid piece of paper without increasing the weight.

A piece of paper bent in the form of a cone is under the stress of torsion.

The cone is not put into the stress of torsion, but it is put into a curved form in such a way that it can transmit stresses much better than it is in the flat condition.

In the same paragraph of the patent, on page 1, the reference is made to the disagreeable effect which is technically known as blasting or chattering. That is the effect to which we have referred previously, and the patentee states that he wishes to obviate that by stiffening the material without increasing the weight which is accomplished by the method of folding and bending described.

I call attention to the passage in this Lumiere patent, beginning at line 29, page 3, down to and including line 46.

I think the description is correct, acoustically speaking.

I have used Lumiere machines experimentally on various occasions here and at home in my own laboratory.

I produce a Lumiere phonograph.

MR. DARBY: I will ask to have it marked for identification and I will tell your Honor that this is the original Lumiere machine that has been in this country and in the possession of the Victor Talking Machine Company since 1909 or 1910.

(The same was marked "Defendant's Exhibit D for Identification.")

THE WITNESS: In this Lumiere machine the cone is about 11⅝ inches in diameter inside of the clamping rings and appears to be made of thin paper.

The structure I now produce is a diaphragm made in accordance with the Lumiere patents which we have just been considering and it bears the trade-mark of the Victor Talking Machine Company.

The diameter of this cone is 14¼ inches inside of the clamping rings.

MR. DARBY: I ask to have this diaphragm, which is now mounted on a radio receiver equipment, operated.

(At this point a demonstration was conducted.)

MR. DARBY: I offer this Lumiere structure in evidence as being made in accordance with the Lumiere patent.

(Received in evidence and marked "Defendant's Exhibit No. 16.")

THE WITNESS: Referring to the English Patent No. 1,064,062, this structure consists of a conical vibrating diaphragm, supported in rings, there being a peripheral surrounding portion which in the patent is described as preferably made of soft flexible rubber.

Paper is mentioned as a suitable material for the conical portion.

It is described and illustrated to be used on a phonograph.

I call attention to a statement on page 3, line 19. The purpose described here is to make a flexible rim so that the central conical portion may move back and forth, the rim yielding as is necessary for this purpose. The peripheral rim surrounding the central cone is made of very light thin rubber so that the bending of the peripheral rim will not appreciably absorb the energy of the sound and so it will allow it to operate at maximum acoustical efficiency.

The cone itself is made of paper as pointed out at page 2, line 12.

Referring to English Patent No. 1,192,289, the patent describes the diaphragm consisting of a central conical portion and flat peripheral portion which is made of cork or other yielding material attaching the central conical portion to the supporting ring.

The Hopkins patent differs from English in that the flat peripheral ring is made of the same material and the cone is more rigid and serves somewhat as a part of the tympanum, whereas in this case the cork would produce very little effect on the tympanum.

The English is a small diaphragm of a size suitable for talking machine, as it was made in 1916. With reference to the statement of the English patent at page 3, line 11, as compared with the statement concerning which I testified made in the Hopkins patent as to its intended operation of bodily movement without flexing, the description in English patent of the mo-

tion is similar to that described by Hopkins in his patent. The central portion fibrates as a whole without flexing; that is the statement.

Referring to the Elfering Patent No. 1,182,078. This describes a diaphragm with the conical portion in the center and surrounding it is a peripheral ring of flexible material in which gold beater skin, a very thin membrane, is mentioned as a preferable material.

In respect to how this structure as shown differs from the corresponding parts in the Hopkins patent, the peripheral portion of Elfering is made of a very thin material which is more flexible than in the Hopkins patent, where the peripheral ring is made of the same material as the cone.

As to how the structure of the Elfering patent compares with the defendant's Fada cone structure, in Elfering the gold beater skin is a very thin material, but it is not porous and it has vibrations and these will be impressed upon the air, whereas in the Fada structure the cloth ring is a porous material.

As to in what respect this structure compares with the structure of the Brandes cone, the Brandes cone has a rubber ring surrounding it and in the specimen illustrated here the rubber is slack. In the patent it would appear that the gold beater skin is to be drawn taut. The nature of the surface of the material and its manner of affecting the air would be similar in the case of the two materials.

In the Brandes structure the rubber ring is of thinner material than the cone, and in this Elfering patent the gold beater skin is also thinner.

Referring to the Brown British Patent No. 29,833, the complete specification, this represents a conical central portion with a diaphragm placed in a mounting, the opening in which is slightly larger than the edge of the diaphragm, and here this ring between the dia-

phragm proper and the rings surrounding it, is covered with thin tissue paper. In its acoustic effect this will be very similar to the effect of the Elfering patent.

On the question of the desirability of clamping the periphery of the diaphragm, I call attention to the passage on page 3, line 41. In order that this may be accomplished, it states that the ring of flexible material such as paper is attached to it to allow this freedom of movement, and in a later place it says that by this method the back and front air spaces are separated. That is, the baffling effect is secured.

I call attention to the last sentence on page 3, reading as follows:

> "Where it is desired to make the sounds travel out into the room, a receiver of larger size is preferable."

That expression means to me as one skilled in the art, that the diaphragm is described as intended for telephone use, where it is placed close to the ear, and if he wants to make a telephone reproducer that can be heard without being placed near the ear, he states the obvious fact that it should be made larger, larger than here described.

I call attention to the sentence on page 4, line 34, reading as follows:

> "In either case the space on the two sides of the diaphragm is divided into two separate air regions."

That refers to the baffling effect which we have previously described, which prevents the leakage of air from front to back of the diaphragm and increases the efficiency in the reproduction of sound.

The Brown structure differs from the Hopkins patent in the fact that the periphery of the diaphragm is connected to the outer ring by means of a strip of thin

paper instead of the material similar to that to which the cone is made, as in the Hopkins patent.

Referring to the second Brown Patent No. 1157 of 1911, this structure is the same in general character. It consists of a conical central portion which is connected around the periphery, across the rim, separating it from the clamping rings by a flexible mounting of a folding character. It says slacked material such as goldbeaters' skin, so that the diaphragm will have freedom of movement as a whole. This is another instance of the differing but little from those we have just been mentioning.

I call attention to the statement appearing on page 4, line 26, as follows:

> "The width of the annular space must either be so small that the two air regions which are two sides of the diaphragm, may be considered as without communication with one another, or the ring of material must be used. In the latter case, the ring should be slack enough to permit of the diaphragm's movement without any appreciable mechanical constraint being put upon it."

I understand that refers to the effect which is described as baffling and leaking of the sound waves around the edge should be prevented by filling the space at the edge of the cone, being filled with this flexible material, so that the cone itself will not be constrained in its vibratory movements and yet so that the baffling effect will be secured.

This construction of Brown differs from the Hopkins patent in that the connection to the clamping rings is by means of this peripheral ring of thin material here mentioned as goldbeaters' skin, and further that in this case, the goldbeaters' skin is less slack or the mounting is of a folding character, so that there is material enough to give great freedom of movement, at the

periphery, instead of being rigidly clamped at the periphery as in the Hopkins patent.

THE WITNESS: I recognize this structure I now produce as the Pathé speaker.

MR. DARBY: I would like to illustrate the Pathé loud speaker. (Demonstration.) Now, I would like to compare that, for example, with Lumiere. (Demonstrating.)

I will offer in evidence the Pathé loud speaker.

(Received in evidence and marked "Defendant's Exhibit No. 20.")

THE WITNESS: As to the differences in operation of the speakers, speaking first of the Pathé cone, Defendant's Exhibit No. 20, I think that has the poorest tone quality of all those that we exhibited, although it is a commercial product, I understand, put out under this patent. The reasons for that are probably numerous. The reasons for the differences are numerous in all of them. Part of it is due to the material of which the cone is made. I think a considerable part of the difference that we heard is due to the unit that drives the cone in this case, but I think probably the cone itself does contribute in some degree. The instrument that seemed to me next best in quality, or that I should put next best, and next to that one that was the poorest—the poorest was the Pathé—it was thin and shrill in quality, which I think is due in part to the material and somewhat to the driving unit.

THE COURT: Will you give me the exhibit number? Because when I take this up I may have forgotten the numbers.

MR. DARBY: No. 20.

THE WITNESS: Exhibit No. 20.

THE COURT:

Q. 191. Which ones do you like the best?

A. The one that I like the best is this small 3-inch cone, Defendant's Exhibit No. 9; and I think that is due to the manner in which the cone is constructed, and to the soft, flexible material around the edge, which secures adequate baffling, and also prevents the formation of the rattling around the edges. I gather from these demonstrations that a small cone operated in a perfectly designed outfit, can give us results that are more satisfactory than a larger one, but it is not a matter of size only; it is a matter of design of the whole combination, including the driving unit and the baffle board materials, and other things.

THE WITNESS: Referring to the last patent in this prior art folder, the Lodge patent, this patent describes a dynamic motor for driving a diaphragm in a sound reproducer, but that is more or less general. It is one of the earliest ones of that type. It is desired to make a telephone which will give a sound loud enough to be heard without holding the telephone to the ear. It is perhaps the earliest loud-speaking telephone, and the inventor, Lodge, suggests that the driving mechanism may be attached to the walls of the room or to the ceiling in such a way that the sound will come from the walls or ceiling and be heard by the audience throughout in that manner.

On the question of sound-reproducing devices as distinguished from paper cones, that is, the ability of any material to respond to sound, it can be very easily illustrated with the driving units such as used in the radio loud-speakers.

Q. 195. Will you please do so, Dr. Miller?

MR. DARBY: Dr. Miller asked me to do the actual work on this and he will make his comments as we will go along. I might state to your Honor

that we have one of these standard motor drives without any cone or anything attached. This noise that you now hear is the armature noise by itself. There is no load on it.

(Demonstration.)

Q. 196. What is acting as the reproducer when I do it on the table?

A. The whole table top.

(Further demonstration.)

Q. 197. In that instance what was acting as the reproducer?

A. The sound-box and resonator in the guitar box itself.

Q. 198. Does it make any difference what the size and shape of the resonator may be?

A. It makes a difference, but with proper adjustments of the parts you can get good sound reproduction in various combinations, not merely a cone or a flat diaphragm, but combinations of anything.

Mr. Darby: I want to compare something else with that. (Demonstration with a derby.)

Q. 199. I think you testified that the cloth will not give off sound, but it is an absorber of sound. Will you see if you can get some music out of my handkerchief. First, put it in a crumpled-up state. (Demonstration with handkerchief.)

The Witness: I would like to demonstrate the change in the stiffness of the paper by using a piece of paper with one of these.

Q. 200. What have you to say as to the last demonstration with the handkerchief?

A. The handkerchief is porous and does not impress the vibrations on the air, and felt is more or less

of a solid material and is not porous. The demonstration that we can make with this sheet of blotting paper might be interesting as showing the method of taking a large area which is light in weight as paper as is done in these patents. (Demonstration with blotting paper.)

Q. 201. Now, Mr. Miller, what do those demonstrations which you have just made illustrate, including the one with the handkerchief or cloth?

A. Repeating the statements that I have made in a general way that sound vibrations in the air can be reproduced from elastic solid materials which can be set in vibration by a driving mechanism, and the exact character of this material, the particular size of this material, is not an essential acoustic characteristic. Given a driving force and a certain mass of weight or vibrator which is to be vibrated, we must have an adjustment of the power to produce vibrations of the proper frequency and amplitude.

If we have ample facilities at our disposal, we can construct a satisfactory loud speaker in a great variety of ways and I think we can make many of them such that the musical characteristics, the tone quality characteristics of one of a particular shape would be the same as that of another one of very different shape. The main point is that a paper cone 9 inches in diameter or any other specific dimensions is not an essential characteristic.

MR. DARBY: Because of the fact that my handkerchief was probably soiled, I will produce a sheet of cloth which I can offer in evidence to illustrate the fact that it is not a vibratile sound-producing material.

(Demonstration with cloth.)

MR. DARBY: I offer this sheet of cloth in evidence.

(Received in evidence and marked "Defendant's Exhibit No. 21.")

MR. DARBY: It is hereby stipulated that the three depositions attached hereto, being the testimony of the persons named in the cause entitled "Lektophone Corporation versus Western Electric Company, Inc., in Equity 30,234 in the United States District Court, Southern District of New York," and the exhibits identified by the said persons, and introduced in the said cause, and the Exhibits A and B may be used by the defendant in this cause, with the same force and effect as if said depositions and exhibits were regularly taken and introduced in this cause.

It is further stipulated that the total manufacture of loud speakers—using the diaphragm of Defendant's Exhibit D for identification, by the Victor Talking Machine Company did not exceed 40,000 and that none have been manufactured or sold except in the years 1925 and 1926, and it is further stipulated that if any testimony in addition to that stipulation is offered, that I will produce the witnesses Mr. MacEwan and Mr. Diehl for further cross-examination by Mr. Davis, at his request.

MR. DAVIS: Yes, that is stipulated.

DEPOSITIONS OF EDWARD K. MacEWAN, ALBERT C. DIEHL AND HARRY O. SOOY, INCLUDED BY STIPULATION (TAKEN IN 1926).

EDWARD K. MacEWAN.

EDWARD K. MacEWAN, called as a witness on behalf of the defendant, being duly sworn, testified as follows:

DIRECT EXAMINATION.

My residence is 6334 Woodbine Avenue, Overbrook, Pennsylvania, and I am secretary of the Victor Talking Machine Company. Our plant is located at Camden, New Jersey. I have been employed by the Victor Talking Machine Company since 1900.

In 1909 I was assistant to Mr. English, who had charge of the experimental laboratory, and my duties principally at that time were the manufacturing of the recording material and assisting Mr. English in clerical matters.

The structure now shown me is a machine that came over to the laboratory, to the best of my knowledge, that is the same machine that came over to the laboratory of the Victor Talking Machine Company in either the latter part of 1908 or 1909, the early part of 1909. It is a Lumiere machine. I heard this machine played in 1909. Well, I considered that it had a very much broader tone of reproduction than what machines we were making at that time. We were making the horn type machine going underneath the motor and enclosed horn at that time, enclosed horn and sound box machine and phonograph.

I note that the diaphragm on this machine is a pleated paper one. Subsequent to my hearing this machine in 1909, the Victor Company experimented and conducted experiments with diaphragms of that type.

The purpose of that experiment was trying to accommodate it to the product that we were making at that time. In the early experiments, as I recall, the diaphragm rested on the turn-table, but their object was to try to make it more accessible for use, more convenient, and they later on developed a machine in which the diaphragm was placed in an upright position. When I say convenient, I mean, to get it away from the turn-table.

The Victor Company is making devices today with these pleated paper diaphragms. They are making a loud speaker for radio purposes. That diaphragm is substantially the same as the one which is on this machine which you have identified.

MR. SCULL: I offer the machine identified by the witness in evidence as Defendant's Exhibit A.

(Marked "Defendant's Exhibit A.")

In making these radio loud speakers with the pleated diaphragm, the Victor Company is doing that under license or other arrangements under patents of Lumiere. They took an option, according to my recollection, in the early part of 1909. That option was taken up. They have a contract.

In the experiments of which I have any knowledge, no change was made in the diaphragm itself on this Exhibit A. That is, the experiments which I mentioned were merely to fit in these large diaphragms into the Victor cabinet machine. And then also they had it so arranged that they could use it on a table type machine.

As secretary of the Victor Company I am fairly familiar with the sales of Victor talking machines. Something over 300,000 of the Victor talking machines of the sound-box and horn type were sold in 1918. In

1919, over 400,000. In 1920 I think we came up to the 500,000 mark.

I heard of the Pathé Actuelle in 1918, 1919 or 1920. I never heard any discussion amongst the officers of the Victor Company as to any effect which the sales of the Actuelle machine were having on the Victor sales.

CROSS-EXAMINATION.

This option with the Lumiere Company was taken up in the form of a license contract, as I recall, around 1909, the early part, with Mr. Lumiere.

The Victor Talking Machine Company manufactured phonographs with this Lumiere diaphragm. I think they sent a few out to the different foreign countries. They did not ever sell any in the United States to my knowledge. I have no idea how many they ever manufactured and sold. It was very few.

It was in 1925 that the company first made radio loud speakers with the Lumiere diaphragm. They are still making and manufacturing those loud speakers with the Lumiere diaphragm under the trade name, Victor Loud Speaker. The Victor Talking Machine Company is not manufacturing and selling devices with radio loud speakers of any other type.

As to whether or not the Victor Company recently offered on the market and showed a phonograph combined with a radio loud speaker, and if so under what name, I do not know of any except that cone that we are placing in what we call our Electrola instrument. That is, our Electrola instruments are the de luxe latest model Victor Talking Machine Company instruments. They have a cone in them. The cone is not manufactured by the Victor Talking Machine Company. It is purchased from the Radio Corporation of America and manufactured by the General Electric Company.

I am not familiar with the type of radio loud speaker, the two types that the Radio Corporation of American puts on the market under the numbers Radiola 100 and Radiola 104.

The size of the cone in the Victor Electrolas is, if I recall, one is 6 inches and the other, I think, is 13 inches.

MR. DAVIS: It is stipulated that in the Victor Talking Machine Company's product known as the Electrola, which is a combined phonograph and radio machine, the radio loud speaker is either a Radio Corporation Radiola 100 or a Radio Corporation Radiola 104.

MR. SCULL: And that these loud speakers are bought as part of the complete radio equipment from the Radio Corporation and this complete equipment is installed in the combined machine by the Victor Company.

MR. DAVIS: And the loud speaker serves as a loud speaker both for the phonograph and the radio receiving set.

MR. SCULL: I will say that when the electrical pick-up is used in such a machine.

MR. DAVIS: The electrical pick-up is a device by which the phonograph records may be utilized to actuate the electrically actuating mechanism of the loud speaker.

THE WITNESS: I do not know how many horn type phonographs were sold by the Victor Company in 1921. I do not know if it was less than 1920. I recollect that 1920 was the largest year the phonograph business ever saw. I know that the business in horn type phonographs in the year 1925 of the Victor Talking Machine Com-

pany was not as large as other years. It was about 400,000, I think, all told. In 1924 it was around 400,000. There has been a slightly progressive falling off in the horn type phonograph business since 1920.

This instrument which has been put in evidence as Defendant's Exhibit A came over to the laboratories of the Victor Company. It was either brought over by Mr. Johnson or it was sent over. It was built in France by Lumiere or under his direction.

RE-DIRECT EXAMINATION.

Horace Petit was the Victor Company's patent attorney. He is now dead.

Mr. Johnson, I just referred to, was the president of the Victor Talking Machine Company in 1909.

At the present time the Victor Company sells phonographs of the sound box type with the horn without any radio attachment. The biggest product is that.

The Victor Company makes what they call a triple machine. One which has an ordinary phonograph horn played by means of the needle on the record. That is what they call a mechanical reproduction. In such a machine or type there are incorporated a radio outfit with a cone loud speaker, the radio reception being delivered through this loud speaker, and there is also in such a machine a so-called electrical transmission or electrical pick-up by which the phonograph record can be also transmitted to the cone loud speaker. In other words, in the one machine there is both the phonograph horn and sound box of the very old type and also the radio loud speaker.

RE-CROSS-EXAMINATION.

I testified that the Victor Company began manufacturing some radio loud speakers with the Lumiere diaphragm last year. I really think they manufactured

about 40,000 altogether. I think we started to make deliveries about either December or January of 1925. No, I do not believe it was quite that early.

As to the way the sales have grown, that is, whether they have been on the increase or the decrase, the sales are not so high just at present. That is true of radio loud speakers generally. It is a seasonal business

The company has not decided how many loud speakers they will manufacture for next year with the Lumiere diaphragm. There has been no decision arrived at at the present time as to quantity.

EDWARD K. MACEWAN, recalled.

DIRECT EXAMINATION.

At the present time the Victor Company is putting out a machine of the sound box and horn type known as the Orthophonic. The great bulk of the business is being done by the real talking machine with the Orthophonic horn and the regular Victrola sound box.

That is not what I call an Electrola, that last machine I have described. The Electrola is the one with the radio combination, and the other one is the Orthophonic. The Orthophonic is by large the major portion of our business, and that is by large the horn type.

I am pretty sure the Victor Company also makes a type of radio receiver in which they use a Western Electric horn for the radio portion. That is the Orthophonic horn. With these radio receivers they are not using the cone loud speaker.

I could not say what percentage of the total business in radio machines this Orthophonic type have to the total amount. It is larger than the cone.

CROSS-EXAMINATION.

What we called the Electrola came on the market—I imagine we started to put them out about February of this year (1926). The price of the Electrolas to the ultimate consumer is about $425, I think, and there is another one about $500, and there is another one about $900.

STIPULATED DEPOSITION TAKEN IN 1926.

ALBERT C. DIEHL.

ALBERT C. DIEHL, called as a witness on behalf of the defendant, being duly sworn, testifies as follows:

DIRECT EXAMINATION.

A. My address is 229 North Thirty-ninth Street, Camden, New Jersey. I am employed by the Victor Talking Machine Company. I have been employed by the Victor Company since 1899. I was away a short while, but the second reinstatement was from 1900.

The machine marked Defendant's Exhibit A I first saw during the summer of 1910. I was called to help Mr. Elfering. He is now dead. I was called in to help him on some mechanical jobs, I having a machine shop and he having no machinery, I used to from time to time do his machine work for him and that is the time I saw this machine and one like it. I heard it played at that time. Mr. Elfering and Mr. Lumiere were present. It seemed to me to have a clear, full tone. I liked it. I thought it was a little more natural than our regular talking machines.

I did not come in contact with Mr. Elfering very often, but as far as I know he was trying to arrange the machine so that it would be more convenient to get

at the record by placing the diaphragm in a convenient position. I did not see very many of the experimental machines that Mr. Elfering made. I saw some.

The diaphragm was always the same in these machines, as far as I know, with the exception that he was experimenting at times with different diameters of that small center making it out of different materials, and so forth, and different diameters.

CROSS-EXAMINATION.

The ton of the Lumiere diaphragm seemed to me more natural than the standard horn type speaker of the Victor Talking Machine Company. As to whether that Lumiere speaker had less of a horn sound than the standard Victor Talking Machine, I should say it was less sharp. More of a natural tone. It had more of the round, full tones, whereas the talking machine had more of sharp, bright tone. I do not know enough about it to know what a horn resonance is in these machines.

HARRY O. SOOY.

HARRY O. SOOY, called as a witness on behalf of the defendant, being duly sworn, testifies as follows (deposition taken 1926):

DIRECT EXAMINATION BY MR. SCULL:

I reside at 265 Myrtle Avenue, Merchantville, New Jersey. I am superintendent of recording for the Victor Talking Machine Company. I have been employed by the Victor Talking Machine Company ever since it was organized. I started with Mr. Johnson before it was organized in 1898. I have been connected with the recording department of the Victor Company since 1900.

The device you have produced is a Stroh violin. This device or one like it came from Europe, I think, in 1903, by Mr. C. G. Childs, who was then manager of the recording department. These violins have been used by the Victor Company since 1904 constantly. We used it at that time because we could concentrate the sound more direct to the recording horn which we were trying to get on the records, while the regular violin spread in the air and we could not concentrate it to get on the record strong enough.

The device which I have in my hand is the same as has been used by the Victor Company since 1904. It is either one or one exactly like it.

MR. SCULL: I offer this in evidence as Defendant's Exhibit B, Stroh Violin.

(Marked "Defendant's Exhibit B.")

MR. DAVIS: No cross-examination.

MR. DARBY: I offer at this time the Lumiere device Defendant's Exhibit D for identification.

THE COURT: Admitted.

(Received in evidence and marked "Defendant's Exhibit No. 23.")

MR. DARBY: I offer in evidence the original Stroh violin which has heretofore been marked as Defendant's Exhibit C for identification for use in connection with the deposition of Mr. Sooy.

(Received in evidence and marked "Defendant's Exhibit No. 24.")

EDWARD K. MacEWAN.

EDWARD K. MacEWAN, called as a witness on behalf of the defendant, and having been duly sworn, testified as follows:

DIRECT EXAMINATION.

I am secretary of the Victor Talking Machine Company.

I am the Mr. MacEwan who testified in the case of Lektophone Corporation v. Western Electric Company.

The Victor Talking Machine Company sold ten-inch cone equipment with its machines in their model called the Cromwell.

The Victor Talking Machine Company also sold cones under nine inches.

The Victor Company discontinued the sale of ten-inch cones.

The Victor Company now sell cones that are smaller than nine inches.

The Victor Company does not now sell cones over nine inches. They do not sell any that are nine inches that I know of.

I have looked up the figures of the number of sales of this various equipment recently.

The proportion of the number of Victor machines of the horn type which were sold during the period, to the machines using ten-inch cones which were being sold I would say was approximately 100 to one.

We discontinued the sale of cones of the ten-inch type about July, 1927.

The proportion made by the total number of Victor machines of the horn type with respect to the number of machines sold with cone apparatus, whether it is over nine inches or smaller than nine inches.

Over the period of time that we were selling cone apparatus was about eighteen to one. That is, all type of horn machines. As to why the ten-inch cone structure or a structure having a cone over nine inches was discontinued.

I cannot say, except that we were not very well satisfied with the performance of that instrument. We are now selling a six-inch cone and eight-inch cones. We are satisfied with the performance of those structures. They are very good. They give excellent performance.

I have recently checked up for Mr. Rich the total number of Lumiere diaphragm devices that were sold by the Victor Company. About 48,000 all told.

We now buy our reproducing apparatus of the cone type from the Radio Corporation of America.

We began to acquire our cone reproducing apparatus from the Radio Corporation of America about January, 1926.

We had a contract with the Radio Corporation of America in 1925.

The Radio Corporation of America supplied us with the ten-inch cone structure.

In June, 1926, the Victor Company discontinued the manufacture of the Lumiere structure.

CROSS-EXAMINATION.

I do not know of the first cone speakers that my company sold, manufactured by the Radio Corporation, were the Radiola 104.

I do not know whether the one that we sell now is the Radiola 106. I do not know much about the equipment. I do not know how they are designated.

The Victor Company call them when they sell them, the super-heterodyne sets of Radio.

The Victor Company now sells more than one size of loud speaker. I think they sell the eight and the

six. That is the Victor Company's designation. That is all I hear them call it.

When I spoke of the diameter of the cone or the size of the cone as being more or less than nine inches, I meant the diameter of the cone across its base.

When I got up these figures in which I compared the total number of cone speakers sold by the Victor Company with the total number of horn speakers sold by the Victor Company, I did not include among the cone speakers the 40,000 Lumiere speakers that the company sold.

RE-DIRECT EXAMINATION.

I am not connected with the sales department of the company.

When I referred to the cones as eight and six, I meant by those figures that the cones that we are using now in our machines are eight inches and they call them the eight-inch cone and the six-inch. That is all I know of the designation.

SELDEN T. WILLIAMS.

SELDEN T. WILLIAMS, called as a witness on behalf of the defendant, and having been duly sworn, testified as follows:

DIRECT EXAMINATION.

I am thirty-seven years old; my occupation is engineer; my residence, is 83 North American Street, Woodbury, New Jersey.

I have been associated for the past three or four years with the Victor Talking Machine Company.

I was originally production engineer in 1923, in 1924 chief engineer; 1927, general superintendent; 1928, works manager.

I am no longer connected with the Victor Talking Machine Company. I left in December 12, 1928.

I know the circumstances under which the Victor Company took up electrical operation and sound reproduction.

At that time, 1922 and 1923, the sale of the mechanical reproducing Victrola was not exceedingly good. And the Orthophonic contracts with the Bell Telephone Companies were about completed and radio was increasing in importance, and radio production was becoming more interesting to the sales and engineering department and the Radio Corporation had developed complete electrical apparatus for electrical reproduction for the radio and the record, and the contract was made with them to secure the electrical reproducing equipment.

The Victor Company was manufacturing only the radio loud speaker. No one name would apply to the rest of the equipment going to make up the complete assembly.

In the radio side there will be the radio receiver and the amplifier with a loud speaker and in the record reproducing side there will be a pick-up control and the amplifier loud speaker.

On the phonograph side, the Victor Company was manufacturing the Lumiere loud speaker only.

They were not manufacturing the remainder of the electrical equipment necessary.

The equipment I now produce is the amplifier used in the Cromwell equipment for the operation with the ten-inch cone. I mean the Cromwell model of the Victor Talking Machine Company.

MR. DARBY: I will offer it in evidence.

THE COURT: Admitted.

(Received in evidence and marked "Defendant's Exhibit No. 25.")

THE WITNESS: This equipment was purchased from the Radio Corporation of America.

The Victor Company was not manufacturing this equipment at that time.

The apparatus I now produce is an amplifier used for the operation of the six-inch cone type speaker.

That equipment was purchased from the Radio Corporation of America.

The Victor Company was not manufacturing any of this equipment.

MR. DARBY: I offer that equipment in evidence, the 6-inch type.

(Received in evidence and marked "Defendant's Exhibit No. 26.")

I recognize this pamphlet that is handed me.

It is a service bulletin on the general information of the power amplifier units.

I find in that service bulletin a picture or schematic layout of the apparatus which we purchased from the Radio Corporation of America and which we were not manufacturing. That covers the amplifier construction.

MR. DARBY: I offer in evidence the pamphlet of the witness, page 3, showing a picture of the electrical equipment.

THE COURT: The exhibit is restricted to page 3 of that pamphlet.

MR. DARBY: Yes, sir.

(Received in evidence and marked "Defendant's Exhibit No. 27.")

THE WITNESS: This is a similar pamphlet. I find a similar picture in that pamphlet showing the equipment on the 10-inch cone.

This diagram covers the 10-inch cone mechanism. There is a schematic arrangement of the power amplifier unit.

MR. DARBY: I offer in evidence page 13 of the pamphlet last referred to by the witness.

(Received in evidence and marked "Defendant's Exhibit No. 28.")

As to the decision of the Victor Company as to the employment of cones for loud speakers in its equipment I was concerned with the various discussions between the sales department, engineering department and various other departments of the concern.

As chief engineer of the company I participated as to the cones that the Victor Company put out. The initial contract called for two types of cones.

Prior to the contract the first type that my company put out was the Lumiere diaphragm. We started the Lumiere speaker as a diaphragm and not a cone. That was the first type of free air reproducer the Victor Company put out.

I recognize this diaphragm as what the Victor Company built and the operating mechanism I do not recognize.

MR. DARBY: The witness is referring to Defendant's Exhibit 16.

THE COURT: He identifies the diaphragm and not the operating mechanism.

MR. DARBY: That is right.

THE WITNESS: As to why the Lumiere diaphragm or the Lumiere reproducer was discontinued, our contract with the Radio Corporation covering electrical reproducing equipment purchased and those supplied us with complete equipment from the point of the needle

to the sound and from the radio impulse to the sound. We bought the complete apparatus.

This was a complete performing apparatus and all parts were balanced to each other and matched to each other for the purpose. There were service factors.

With reference to the question of balance, in any system of transferring energy a proportional arrangement of parts is required for best performance. The cone was matched to the amplifier and so on through the other component parts of the system resulting in a better balanced reproduction.

The question of balance might be compared to the application of balloon tires to an automobile. It would require a change in the spring design, in the steering gear design, and various parts of the chassis in order to get the full benefit of the balloon tires. The same applies to changing any component parts, and reproducing mechanism. Care must be taken to see that it fits into the whole.

That was some kind of acoustic engineering problem as to whether or not the Victor Company was paying royalty to Lumiere for the speakers that it made, it is my understanding that we had a license. The financial arrangements I do not know. I do know whether or not that license required a royalty payment.

The Victor Company discontinued the 10-inch cone structure because sales reception were not particularly good for that model.

Its performance was considered at that time not to be as generally satisfactory as the Orthophonic Victrola and certainly not as good as the 6-inch cone model.

Up to the time that I left the Victor Company from the time that the 10-inch cone was discontinued, the Victor Company did not to my knowledge make and sell any reproducers nine inches or larger.

The acquisition of this reproducer equipment from the General Electric Company was a matter of com-

mittee arrangement and as a member of the committee I endorsed it. I did not know when that endorsement was made that the Radio Corporation was licensed under any loud speaker patents. I was not concerned with that. I knew nothing of the patent situation. I understood only that we were protected by our contract with the Radio Corporation.

I satisfied myself as to the performance of the entire equipment including the electrical equipment and the cone. I recognize the structure that is handed me. It is a ten-inch cone purchased from the Radio Corporation. It is the same type of equipment as is used in connection with the equipment that is in evidence as Defendant's Exhibit No. 25.

MR. DARBY: I offer the defendant's cone structure in evidence.

(Received in evidence and marked "Defendant's Exhibit No. 29.")

I recognize the device now produced. It is the 6-inch cone speaker sometimes styled the Rice-Kellogg speaker, used in connection with the equipment, Defendant's Exhibit No. 26. It is a dynamic speaker. The base put in front of the cone was added by the Victor Talking Machine Company. It is styled a booster and made to operate.

MR. DARBY: I offer in evidence the 6-inch dynamic type of cone speaker.

(Received in evidence and marked "Defendant's Exhibit No. 30.")

When I refer to 10-inch and 6-inch cones, the measurement designates the nominal diameter of the cone member, as I understand it, that is, the outer periphery of the cone being regarded as a base, the diameter of the base.

As to whether the change from the 10-inch cone to the 6-inch cone was requested or required by the Victor Company or was made and presented first to the Victor Company by the Radio Corporation, I have this to say. Our original contracts I believe called for both 6-inch and 10-inch cones. This 10-inch cone was later discontinued on account of sales reasons, and we were not particularly satisfied with it. It made an expensive machine, more expensive machine than that used on the Victrola, and not as good as a 6-inch cone.

Confining myself to the fact that we were not satisfied with the 10-inch cone as compared to the 6-inch cone, or speaking acoustically or from an engineering viewpoint, the reason why we preferred the 6-inch cone to the 10-inch cone was the small reproduction, which covered a more musical range; greater volume, and better quality over the range.

By greater, I mean by that, the sound comes from some thirty-two vibrations per second up to say roughly 8000. Certain instruments may cover only 250 vibrations per second up to say 3800. The 6-inch cone covered a greater proportion of that musical range than did the 10-inch cone.

From the viewpoint of the hearer, that means that you hear lower notes and higher notes, if you get a greater range.

Depending on the characteristic of the cone in general, the 6-inch cone is better than the 10-inch cone. That is what I found.

With respect to volume, the fact that the 6-inch cone was a dynamic speaker unquestionably affected the question of volume.

It is possible to apply more power in the direct manner to the dynamic cone drive than by the lever mechanism of the electro-magnetic unit.

You are able to increase your volume by increasing the power even though you decrease the diameter of the cone. It works out that way apparently.

As to whether or not the present type of Victor loud speakers was a development of the sound reproduction from record, graphophone or some other industry, some other branch of the art, I believe it was a development of the radio art.

The dynamic drive enables you to apply much more power to the cone itself and all of our dynamic cones that were used in production so far as I remember, were of the so-called 6-inch diameter.

As to why the dynamic drive was not used with the larger sized cone, there seemed to be some tendency to rattle in the larger sizes of cone when the dynamic drive was applied and the amplitude of vibration impressed by the dynamic drive was available.

When I say "rattled," I mean some noise superimposed upon the reproduction.

With respect to the ability to record low notes in the recording of phonograph records prior to the adoption of electrical recording, the mechanical recording system possessed material weight and stiffness, but we were unable to record anywhere near the degree of base notes that we were able to reach with the microphone amplifier electrical method of recording.

With records of today which have been electrically recorded, you get lower notes than you did with records made by mechanical recording as distinguished from electrical recording.

The increase of range which we were able to record with electrical recording I would consider a marked increase, particularly in the lower register.

In reproducing from a record, it is only what is recorded that is reproduced, as regards music and speech.

CROSS-EXAMINATION.

They claim to go down on the scale on the electrically recorded records to cover between 35 and 40, but the intensity of the loudness drops off from roughly to 80 or 90 vibrations per second.

The Victor Company on the old mechanical records went down somewhere around 150 vibrations per second, as I remember it.

The 10-inch cones supplied by the Radio Corporation to the Victor, like Exhibit 29, and the actuating mechanism that is on Exhibit 29 is the equipment that is sold by the Radio Corporation generally as Radiola 100, in a housing. The Radiola 100 has been discontinued by the Radio Corporation for general sale.

I believe that they give it some other name now.

The drive and cone of Exhibit No. 29 had a somewhat more musical tone than the other type. It is my understanding that the Radiola 100 is a superseded model of the Radio Corporation, and is no longer marketed.

The dynamic drive and cone which has been put in evidence as Exhibit 30 is the equipment of Radiola 104, as marketed by them.

The Radio Corporation calls that same equipment when they sell it to others than the Victor Company originally the 104 loud speaker.

I do not know what they call it now. They now sell to the general public equipment that the Victor Company puts in its instruments and sells and which you call the 6-inch cone.

It is not identically the same, if you go back through the amplifier and the balance of the electrical equipment.

The cones I believe are identical. I do not know what the Radio Corporation calls it when they sell it.

I do not know what the Radio Corporation calls the 8-inch cone when they sell it.

As to whether the Radio Corporation sells to the general public an equipment comprising a cone and driving unit which is the same that the Victor Company sells, and which I call the 8-inch cone, I believe that they have the same equipment in their housing.

But I do not know what they call it.

The diameter of the cone in the Radiola 100-A I believe was originally in the 100, 10-inch. I do not know what it is in the 100-A.

The diameter of the cone in Radiola 106 is nominally 6 inches. It is my understanding that the 100-A and the 106 are later Radio Corporation models than the 100 and 104.

RE-DIRECT EXAMINATION.

The Victor Company first began to commercially use, that is, record for commercial sale by the electrical recording method in 1925, as I remember it.

The Radio Corporation is selling loud speaker equipment to people other than the Victor Company with a 6-inch cone.

They wanted it commercially for their own dealers and supply component parts to the Brunswick people.

As to whether or not the Radio Corporation is selling 10-inch cone equipment to others, I have lost track of the diameters of the present day. They did at one time.

FIFTH DAY.

In the U. S. District Court,
Wilmington, Delaware,
Tuesday, May 14th, 1929, at 10 o'clock A. M., Daylight Time.

Before: Hon. Hugh M. Morris,
U. S. District Judge.

Appearances: As before.

DAYTON C. MILLER.

Dayton C. Miller resumes the stand.

Direct Examination by Mr. Darby (Continued).

Referring to the last demonstration made while I was on the witness stand which consisted of utilizing various materials and pieces of furniture, as a sound reproducer, that demonstration implied in my opinion that the source of sound which we hear, whether it is considered as the original source or as a reproducing source, consists of matter in a state of vibration.

This matter may be of any kind so long as it is capable of impressing its vibrations upon the air surrounding this vibrating matter. This vibrating matter in the case at hand is referred to as a diaphragm.

The diaphragm may be of itself what is called vibratile material or it may be a more solid mass. It must be set into vibrations so that the movement of the surface of this body will communicate the vibrations corresponding to the sound to the air around it.

The air surrounding it must be set into the corresponding vibrations and to such a degree that the air vibrations which then proceed to the ear, will give a

satisfactory and adequate effect upon the ear, representing the source or the loud speaker.

It is immaterial as to what the size of this diaphragm is, within very wide limits, and the demonstration showed limits between 2½ inches to more than 12 and it may be very much larger, but in any case it is necessary that this diaphragm be put into adequate vibration.

That can be accomplished by a proper adjustment of that which causes it to vibrate, and in the case of a loud speaker in a radio unit or the electric motor which drives it, in the case of the talking machine the needle and its accompanying lever which are connected to the source.

By proper adaptation of the driving force to the body which is being moved, the diaphragm, an adequate reproduction of sound can be secured. It is necessary that the vibrations of the diaphragm be properly transmitted to the air.

In this connection the area of the diaphragm is involved and in addition the driving force so that the amount of energy delivered will be appropriate and this energy must be conserved as much as possible and not allowed to dissipate by leaking around the edge of the diaphragm so that we must either have a baffle at the edge, and if we adjust these various factors the point of the demonstration was that we can secure sound reproduction from almost any solid body which can by any means be put into vibration.

These factors have been known in acoustics from the beginning, they have been known for many years. Certainly it is all contained in such treatises as that of Railey which is more than fifty years old.

In one of my demonstrations I used blotting paper. I changed the point of connection from the edge of the blotting paper to its approximate center and then varied the shape.

The curving of the sheet of blotting paper increased the effective area.

As to the effect acoustically this had on the sound waves, there was no difference in the tonal quality, but the difference is one in intensity or the amount of energy represented in the radiated sound waves.

THE COURT: I got the impression that as the paper was put under a strain by its curving, when it was connected at the center, that there was greater volume probably because there was more rigidity in the paper when under a strain and consequently the vibration was communicated with less force to the surrounding atmosphere. That was my impression and so was I wrong about that?

MR. DARBY: No, sir. I think your impression was correct but there was another factor as I understand it. When you confine a body of air more or less by the shape you were in effect loading the diaphragm by causing the vibration to move a greater body of air more or less confined.

By MR. DARBY:

Q. 206. Am I correct in that, Dr. Miller?

A. May I comment on that?

THE COURT: Help me out in any way that you can.

A. (Continued.) The explanation to the Judge seemed to be quite correct with the exception of the last phrase which I should like to explain. You said with less loss to the surrounding air. Well perhaps there may have been less loss. The main fact is that when curved actually more air was set in vibration than in the first place, not due merely to saving of loss, but due to more sound energy generated. There was more energy generated from the driver when the thing is curved and more sound air involved.

THE COURT: I think the difference between us is my inaccuracy in phrasing my thought.

By THE COURT:

Q. 207. What I had in mind was this, that if the paper lacked rigidity, that is, if it were two-ply, that it did not have the form or did not have the quality necessary to transmit the vibrations transmitted to it through the contracting air; is that correct?

A. That is quite correct but the present point is that the driving motor delivers more energy when the resistance is greater and that the difference is not one of loss but one of actual generation.

Q. 208. Now I have your thought.

A. That is the point I wanted to make. Otherwise the explanation was quite correct.

THE WITNESS: It was stated in the Opinion of the Court of Appeals in the Lektophone v. Brandes case as follows:

> "As we understand the action of the cone in free air, waves of difference frequency are shed or emitted from the cone at various zones, that is to say, all the high-frequency waves pass off into the open air near the apex of the cone, and as the waves become of lower frequency they will not pass off except from the farther out edges of the cone."

The statement is incorrect as a statement of what happens in my opinion.

Q. 212. If you take any particular tone which represents a particular pitch somewhere in the middle scale, if you please, will the part of the cone which gives off or causes vibration of sound wave, correspond to that cone be confined to any particular zone or location on the cone diaphragm?

A. It will not. It will be emitted in general from all over the surface of the cone.

Q. 213. Can you get that particular note near the apex of the cone?

A. Probably.

Q. 214. And likewise near the end of the cone?

A. And likewise from the edge. With greater facility from nearer the edge than near the apex. It comes from all over the surface, the surface breaking up into different node patterns but all parts of the surface emitting sounds for all different pitches.

Q. 215. And is that true for high-frequency tones?

A. It is.

Q. 216. And is it equally true for low-frequency tones?

A. It is.

THE WITNESS: As to whether or not increasing the diameter of a cone increases the low notes that the cone is capable of giving off at its free edge, in my opinion the cone of any diameter or any size can give off the low tones whether it is large or small.

Referring to the structure of reproducer shown in the Hopkins patent and to the radio loud speaker of Fada, for example, illustrated in Plaintiff's Exhibit No. 13, I will point out the essential acoustic differences between the two devices.

The Hopkins device shows a plane periphery, the annular ring around the conical portion which has an acoustic effect. In the Fada device the part surrounding the conical portion is of pliable cloth which is ineffective in an acoustic sense.

There is also the manner of support. In the Hopkins device the cone, the vibrating part, is held in its neutral position with respect to its acoustic vibrations by the annular rim which in turn is firmly clamped between the ponderous rings. It is supported in its neutral acoustic position essentially at the edge. In the Fada structure the cone is supported in its neutral

acoustic position by means of the springs attached near the apex of the cone.

The structural differences between the Hopkins structure and the Fada loud speaker are as follows:

The Hopkins structure specifies that the vibrating portion, the tympanum, shall have a diameter exceeding 9 inches. The Fada structures have diameters, both of them, less than 9 inches. The Hopkins again states that the ratio of height of cone to the diameter of the cone shall be one-quarter, 25 per cent. of the diameter which represents the height. In the two structures of the Fada type the ratios of the height of the diameter, the height is 41 per cent. in one and 50 per cent. in the other of the diameter. I consider that these are mechanical differences only, and are not essential acoustic differences.

With respect to the driving force in the two structures, the patent explains only one driving force to be applied to this diaphragm. It explains its use in connection with the needle running in the groove of a talking machine record. The Fada device submitted has for its driving force an electric motor we may call it of the dynamic type as now commonly used in radio. There is a great difference in the amount of power which can be developed in these two cases.

As to the acoustic properties of any room having an effect on the tonal qualities of reproduced sound. I have this to say, it is a very well known and well established fact that the acoustic properties of a room in which sounds such as speech and music are heard are very considerably affected as far as the hearing is concerned by what we call the acoustic properties of the room.

This effect will apply to the reproduction of speech and music by a loud speaker as well as the original source of the speech or music which might take place in this same room.

In our laboratory investigations of musical tone quality, whether of instruments or of loud speakers, were always used, not always, but we do use in the study of such things, rooms which have acoustic treatment, so that we may study the nature of the sound as it originates largely with the effect of the room itself removed.

In answer to the Court's question this morning, reference was made to the loading of the diaphragm. I will explain what is meant by the expression loading the diaphragm.

Perhaps the simple analogy to ordinary electric motor will illustrate it. A motor of the ordinary kind will run light, as we say, and it requires a small amount of electric energy or power to run the motor as it is doing little work. It delivers a small amount of energy. If that motor is loaded by operating machinery or by driving a fan or in any other way, the amount of energy which the motor will deliver is increased when the load is applied. It will be very largely increased up to some limit of its action so that the amount of energy delivered by the device is dependent upon the load.

This is a very well established dynamic principle in connection with various kinds of drivers such as turbines of various kinds in addition to the motors and it also applies to such devices as a vibrating diaphragm which is delivering sound energy.

In the earlier types of diaphragms as used in the phonograph, these diaphragms had the smaller diameters to which reference has been made, three inches or less, and the amount of energy which they delivered to the air in contact with them was correspondingly small and gave a weak sound.

The sound had probably all the characteristics, the essential characteristics of the tone quality in it, but it was very mild in intensity and it would not

carry far and in the telephone we therefore put it to the ear. Everything was there to reproduce tone quality as we hear in the head phones of the radio or in the telephone, but in order to make it audible over a larger area without the head phones, we had to get it to deliver more energy and we load it dynamically by attaching a horn having the small end near the diaphragm and enlarging outward, and the body of air contained in that horn rests on the center of the diaphragm and it has a load effect and when the diaphragm is loaded under those conditions it delivers to this air a larger amount of energy than when the horn is not there, and that is the reason that the horn amplifies the sound because there is more energy put in the air in the horn and then the horn enlarges in such a way that it delivers that energy to a large body of air and the diaphragm delivers to the horn and the horn to the air outside more sound energy than when that is not present.

Such a loading is essential to a satisfactory operation of the diaphragm. It can be secured by the resonating horn which has properties of its own, but the main thing is the loading. That loading can also be secured in effect dynamically speaking by the use of what we term a baffle, by extending the edges of the movable part of the diaphragm by a surrounding stationary portion which enables the load actually operating on the front to be greater than where the air is allowed to move from front to back and the baffle loads it in that way.

We can secure this extra amount of energy delivered with the horn or we can do it by making the diaphragm larger and keeping the air in contact with it larger in amount and preventing baffling and secure the effect by the increased size of the diaphragm.

In any case we can adjust the various factors so that we get for any given purpose a satisfactory result.

In the Lumiere Patent No. 1,036,529, reference is made or at least the descriptive term is employed in describing the diaphragm structure there shown, "a double cone." This is what I understand by the expression there used.

The Lumiere method of pleating the paper and folding it and then putting it in the circular portion produces a stiffening of this somewhat pliable paper, produces a stiffening in the direction of the axis of the diaphragm, the line through the center perpendicular to it, which has the mechanical effect of giving a large area diaphragm, made of light material and yet having such stiffness that it can be made to operate upon a larger volume of air than would be possible with a flat piece of paper.

The cone that we have been referring to in this case, the simple cone accomplishes the same mechanical device of making the paper formed into the cone comparatively light as respects the stiffness of the material in the direction of its vibratory motion.

When the Lumiere cone is resolved, as we say, iato its effective force components as is shown or illustrated in Figure 10 of that patent, the essential part of the structure becomes two flat cones, base to base, and being thus constructed a large amount of stiffness is secured which accomplishes the same mechanical effect as is obtained with the single cones of the larger height.

As to whether or not the Starling & Cole model cone, Defendant's Exhibit 15, which was played on the phonograph had a fidelity of reproduction. I have this to say when operated a small intensities it gave a good reproduction of the sound.

I would say it was a faithful reproduction. With respect to the felt dampening edge as applied to the

Defendant's Exhibit 15-B of Starling & Cole, I call attention to Defendant's Exhibit 29, which is the cone portion of the Radio Corporation loud speaker supplied to the Victor Company. As to what effect the relatively heavy paper pasted on the end of that cone has on its functioning, the paper stiffens the edge of the cone, to a certain extent, and will allow it to be operated at somewhat greater intensity of sound without producing undesirable results. It loads the edge in a manner very similar to that secured by the piece of felt attached to the Starling & Cole cone, Defendant's Exhibit 15-B.

From an acoustic standpoint it does not make any difference in securing the free edge of a conical diaphragm whether the diaphragm be of large diameter or of a very small diaphragm.

In the Stroh patent structure there is a hinge action in the flat peripheral portion of the conical diaphragm.

As to what difference exists in the hinge portion of the Stroh patent and the hinge portion of the Hopkins patent, I have this to say, as described and illustrated in Figs. 1, 2 and 3, there is present in the Stroh patent one or more corrugations around the edge of the cone connecting it to the flat portion. In the Hopkins patent it discloses the construction in which the flat annular portion joins the conical portion directly without this curved union or corrugated part.

The difference between the two is structural, this curved portion or the corrugation of the Stroh patent will allow the hinge action to take place with greater facility than would take place in the Hopkins method of construction where the junction is that of two surfaces directly coming into contact with one another.

The Hopkins patent would be a little stiffer at the point of junction although in both cases there would be what is called a hinge action.

By THE COURT:

Q. 234. Does that mean that the only difference is one of power or force or energy necessary to produce the same result? The inference I get maybe wrong and that is the reason I am asking this so that you may put me right. I get from the hinge action of Stroh, that it can be operated to produce a specified vibration or result with less force, less energy or less power, whatever the proper term is, than could be done were there no hinged action or corrugations there, is that it?

A. That is the explanation that I intended to make, that there is no essential acoustic difference in this curved part, but that this curved corrugation does facilitate yielding of the rim in order to secure hinge action a little more freely than the Hopkins device does.

THE WITNESS: Referring to the Dann & Lapp No. 338,660, as to what acoustic difference there is between the hinge portion or flat annular rim portion of the Dann & Lapp structure and that shown in the Hopkins patent, there is no acoustic difference in my opinion. There is a slight structural difference. In this Dann & Lapp diaphragm an annular rim seems to be formed out of one continuous piece of material. The Hopkins structures are made with the rim separate from the conical portion, and then the rim portion is bent upward and attached to the lower edge of the conical portion in construction in such a way that there there will probably be an increased stiffness at the point of the Hopkins patent as compared with this one because of the double thickness of the material at the edge of the cone, whereas there is only a single thickness here.

I have been referring to Hopkins structures other than shown in the patent. I confused that.

In the structure shown in the patent, the flat annular rim portion and the conical portion is all made of one piece.

As the drawing shows there is no difference between the construction shown in the drawings of the Hopkins patent and the drawings of the Dann & Lapp patent. I was thinking of the actual cones that I have seen here.

The specification of the patent in suit describes this structure as made in one piece. There is no mention of it being of more than one piece.

Referring to the disclosure of the English Patent No. 1,192,289. As to what difference exists between the hinge structure there shown and the hinge structure shown in the Hopkins patent. I have this to say, the Hopkins patent has the hinge structure made of the same material as the cone and presumably in one continuous piece. The flange, the plane peripheral portion is made of the same vibratile material as the cone itself and in vibration it produces acoustic vibrations which are part of the sound effect.

In the English patent referred to the plane peripheral portion is made of a yielding material such as cork and the hinge action is very similar, but this cork is of very little or of no effect as regards the acoustic effect.

Refer to the English Patent No. 1,064,062, as to in what respect the flat hinge portion there shown differs from the flat hinge portion of the Hopkins patent in its function and structure, I have this to say: The hinge portion, the flat peripheral portion in this instance is stated to be made of rubber which is attached to the edge of the diaphragm and then to the supporting ring. It serves in my opinion substantially the same purpose as the flat peripheral portion of the Hopkins patent with this minor exception, that this

being made of rubber instead of the same material as the cone might, depending upon the character of this rubber, whether thick or thin, stiff or very soft and pliable, might have slightly different acoustical effects, according to what that material is and that is not made plain in the patent.

The cone structure itself in English is provided with a narrow flat peripheral portion to which the rubber is attached and the rubber attached to the supporting ring.

As to whether or not there would be a hinge action between the flat peripheral portion of the cone and the conical portion of the cone in the English structure, it would be negligibly small, so much so that I would say there would be no hinge action.

The hinge movement would be confined to the rubber ring surrounding it.

As to what differences exist between the operation of a diaphragm acting as a transmitter and one acting as a receiver, I have this to say:

The diaphragm in either case must vibrate in such a way that its vibrations correspond to the sound or sounds involved. In one case the diaphragm is given these sounds from the air as a source, as far as the diaphragm is concerned. It is then set into vibration by the air into vibrations which must acoustically correspond to the vibration of the air in any satisfactory use of the device. These vibrations then in transmitting are carried on into the electro-magnetic apparatus which need not be explained, whether telephonic or radio microphone or mechanical device in recording of phonograph records.

When it is used as a receiver, the vibrations are given to the diaphragm from the electro-magnetic or mechanical devices attached to it, causing the diaphragm to vibrate again with exactly similar and

equivalent vibrations as regards acoustic properties, and then those are given to the air itself.

In either case there is on one side, let us say, the air on one side of the diaphragm, and on the other side the electro-magnetic or other mechanical devices. It makes no difference so far as the essential vibrations of the diaphragm are concerned which side is the origin and which is the reproduced side. The diaphragm acts in both cases to reproduce the sound and it does do this in exactly equivalent fashion whether it is air that is impressed on the diaphragm or the diaphragm impressing on the air because in radio transmission we have both actions taking place to such a degree in the microphone for transmitting, in the loud speaker for receiving, to such a degree that we hear from the loud speaker the equivalent of the sounds which were impressed upon the microphone and to the degree to which we are satisfied with that reproduction, it is never ideal to the last limit, and we are always trying to improve it, but to the degree that we are satisfied that we do hear music and speech, the vibration of the transmitting diaphragm and the vibration of the receiving diaphragm are equivalent. That is, equivalent to saying that in general they are equivalent acoustically and mechanically.

As to my familiarity with the transmitting and receiving diaphragms used in the ordinary telephone, I have been studying such things practically all my life and doing it intimately and in the laboratory and it is a very important part of my work.

I am asked in what respect mechanically does the diaphragm by itself in a telephone receiver differ from the diaphragm in a telephone transmitter?

My answer is not at all as far as the acoustic effects are concerned. The diaphragm used for a transmitter can be used directly for a receiver and it was so used in the early days. For structural reasons we

find it convenient to adopt different devices but the results of the vibrations are the same.

Referring to the Maxwell Patent No. 216,051 as to in what respect the plane annular rim portion of the diaphragm there shown differs from the similar structure in the Hopkins patent in so far as the hinge action is concerned, I have this to say:

The general form of the diaphragm and the annular portion is the same. The difference one must judge from the drawing, the Hopkins patent shows a wider annular rim, but there will be a yielding in both cases.

In the two Lumiere patents Nos. 986,477 and 1,036,529, there is distinctly shown a short horn as it may be called marked No. 11 in both patents. This short horn serves more as a baffle than as a resonating horn. It has very little effect as a resonate, but it has a useful purpose as a baffle, preventing the air from the front directly passing around the edge.

Referring to the Lumiere Patent No. 1,182,078, this patent discloses a diaphragm which is connected at its periphery with a sound box which engages the marginal portion 16. Such a sound box would serve the purpose of a baffle in the sense that we have been describing it.

The thin membrane of gold beater's skin marked 10 in the Fig. 2 of the drawing makes the baffle really a baffle by closing up the marginal gap between the edge of the cone and the supporting sound box. It closes that opening and makes it a baffle.

Referring to the Brown British Patent 1157 of 1911. This patent discloses the use of a membrane mentioned as gold beater's skin connecting the edge of the diaphragm to the supporting portion and which forms a baffle and as it is composed of extremely thin and light and resilient matter, it closes the gap and allows freedom of movement of the cone.

By THE COURT:

Q. 251. I want you to explain to me, because I am not sure, and I want to make sure, the acoustical operation of a horn, if that means anything to you. How does a horn operate to give off sound? You gave that to me in part a while ago. I have a theory of my own and I think maybe I am wrong, but will you tell me what that is? What I got in mind is this, it may be entirely wrong and so you can tell me if it is, and that is, that the diaphragm of a horn is what starts in vibration the air contained within the confines of the horn and it is the vibration of the air contained in the horn that starts in vibration the horn cone which adds to the volume or sound of the horn?

A. The latter part I think is not correct. The sound from the horn does not come essentially from the material of the horn itself. It is the air within the horn, the confined air which is the source of further sound.

Q. 252. And the air does not give a secondary vibration of any moment to the substance?

A. No, it does not. Theoretically it should not be made.

Q. 253. So that fact marks the fundamental difference between the Hopkins or Fada device or any other device, I am not trying to compare or distinguish those, and the cone, and I do not want to lead you into a question because I am not attempting now to get any differences between one cone and another, but the cone and the horn, broadly speaking?

A. The cones that we now speak of, I think, should be compared to the diaphragm part of the horn combination.

Q. 254. The cone itself is the diaphragm?

A. It is the diaphragm.

Q. 255. As well as containing, or is it purely incidental in the cone, or mainly incidental, the amount of air contained in the cone?

A. The air inside of the cone has nothing to do with it.

Q. 256. Or not much?

A. It is not a part of the acoustic property. The vibrations from the surface——

MR. DARBY: If I get your Honor's idea, due to the shape of the cone being cone shaped, it has somewhat the appearance of a horn and I think what the Court is asking is whether or not this peculiar shape of the horn makes it act somewhat as a horn.

THE COURT: It is partly that.

By MR. DARBY:

Q. 257. And to carry it a step further, the effect that you have described of a horn, does that partially take place in a cone-shaped diaphragm?

A. I think I see the point the Judge is getting at. I should say in a general answer what I did mention a moment ago that the proper operation of a horn in connection with a diaphragm is one in which the material of the horn itself, the body of the horn, does not vibrate. It is not a source of sound. If it is, and it is not often, when it is, but if it is it is of considerable disadvantage.

By THE COURT:

Q. 258. It would give a discordant note?

A. Yes. It is more apt to absorb some tones out of the music than otherwise, but it is not a part of the acoustic system proper in the sense here taken. The reason that we use the horn is to separate the enclosed body of air, direct surrounding air and that column of air which rests on the diaphragm is itself a vibrating

body, and I could at length tell how it is capable of vibrating in many different frequencies so that it will take them up from the diaphragm and this body of air resonates them, as we say, and then they are transmitted from the air in the horn to the air outside of the horn directly.

The effect of this conical portion in any of these practical structures as regards the effect of a horn is negligibly small and of no effect.

By Mr. Darby:

Q. 259. As a matter of fact, in the radio loud speakers you have sound waves emanating from the rear of the horn structure as well as from the front of the horn structure?

A. Yes, that is true. Whether they become effective or not outside depends on the construction of the housing and so forth.

The Court: I get what you mean now. From the rear of the cone in the radio loud speaker it vibrates the air both inside and outside.

The Witness: Yes.

The Court: And you consider the air within the cone really part of the outside air because it has a negligible effect?

Mr. Darby: Yes.

The Court: I see.

The Witness: I observed in various of the patents that we have referred to, notably the two English patents, the two British patents to Brown and the Elfering patent, that the conical diaphragms are of small diameter and enclosed, and both referred to in the phonographic art as sound boxes. The significance of that term "sound box" I will explain and also tell what difference exists in an acoustical sense in their opera-

tion as compared with the loud speakers, such as the radio loud speakers of Fada.

The diaphragms which you mentioned first are of smaller sizes and they are held and supported in the casing, which is merely a technical term to call that casing with the diaphragm and the needle support the sound box. There is a baffling effect of separating the air on the front side of the diaphragm from that on the rear.

In the radio loud speakers this sound box or housing has been enlarged in the case or cabinet with a baffling effect still present, but as I have said repeatedly, each one of these diaphragms in its proper use is employed for either receiving or reproducing sound vibrations and I have said that they are equivalent and I have explained to what extent and I can only say that we get from any one of these a sound effect which is a representation of the original sound and therefore their acoustic vibrations are essentially alike.

As to why, in the radio art particularly, they employ cone diaphragms or employ diaphragms of six inches or more in diameter rather than the small diaphragms of the sound box type, they employ them because we are going to demand larger volume of sound reproduction which can be conveniently and economically obtained from the larger sized diaphragms according to current practice.

The power available in radio is quite sufficient to operate the devices that we are now making which require quite increased power.

There arise in the elements of broadcasting equipment resonant frequencies which affect the sound delivered by a loud speaker.

I should refer to them in my laboratory work as distortions or disproportionate relations between sounds. They are produced in very many different points and parts of the receiving and transmitting ap-

paratus and perhaps twenty-five or fifty different places in varying degrees.

In some cases sounds that are entirely extraneous of original sounds are introduced, and sometimes sounds given out by the original source of filtered out or extracted from sounds received from the loud speaker, and there are dozens of places where such changes may take place.

My answer again is that we do succeed by ingenuity in the devising of these electro-magnetic devices and so forth, and nevertheless getting a reproduction that we consider acceptable.

I have used both the Fada loud speakers in my laboratory and in my own home.

I should consider that sand patterns made with a Fada cone would properly represent the action of that cone as it would on any other cone to which the method of study was applied.

If I saw sand patterns I would be able to state whether or not those patterns would accurately illustrate the action of the Fada loud speaker as I know it from my study of its operation.

(Witness withdrawn.)

ROBERT H. MARRIOTT.

ROBERT H. MARRIOTT, called as a witness on behalf of the defendant, being first duly sworn, testified as follows:

DIRECT EXAMINATION.

I am 50 years old and I live at 1470 East 18th Street, Brooklyn, and I am at present a consulting engineer.

I became interested in communication without wires through reading of articles about Tesca and

various others while in high school, and in 1897 I went to the Ohio State University and asked for a course permitting me to study communication without wires.

To make the matter brief, I graduated with the degree of bachelor of science in 1901, after having specialized in wireless communication, and became employed by a commercial company known as The American Wireless Telephone & Telegraph Company, putting up stations in New Jersey which were experimental, and I later built in 1902 a station at Catalina and the mainland on the Pacific coast and continued in a construction, manufacture and operation and maintenance of radio apparatus with the commercial companies until 1912, when I became a United States radio inspector in New York and continued that until 1915, when I became expert radio aide with the navy and resigned in 1925 after becoming consulting engineer mainly in radio lines and some in acoustical lines.

I have served as consulting engineer for the Federal Radio Commission.

I made the sand patterns shown on the table in the court room.

The side of this cone is very steep and is about forty-five degrees and of course anything like this would be all right, and you roll the sand down on the side. Therefore, it is necessary to be able to drop something on there so that when this is perfectly still it will stay on there. I found by dropping fine carborundum and dust from about nine or ten inches above the rim of the cone, the particles would distribute themselves fairly smoothly over the cone and down toward the center and when the cone was quiet. Then when the particular frequency that was desired to test was applied to the loud speaker, the cone would vibrate and throw these particles off from the places where it vibrated the most and where it did not vibrate at all

the particles would of course stay where they were originally dropped.

After that was done, getting the results of the throwing off of the particles, I used a spray of shellac, I presume it is a shellac, you make charcoal drawings with it, to hold the charcoal, to hold the carborundum and sand in place.

For creating the frequency of vibration I used an oscillator made by the General Radio Company, of Boston, Massachusetts, which is manufactured for the purpose of testing the various audio frequencies within the musical range and extending somewhat beyond the ordinary musical range.

The cone that I now hold in my hand illustrates that this central portion here, cone No. 1, is marked 60 to 100. That illustrates that this central portion next to the ring where most of the carborundum is off, vibrated very rapidly, throwing the carborundum off with considerable velocity. The vibrations at other places were not apparent in the position of the grains of carborundum.

The pattern that I secured illustrates the vibrations of the cone at from 60 to 120 cycles a second. I could not tell from this device just how low it was.

MR. DARBY: I offer the pattern in evidence.

(Received in evidence and marked "Defendant's Exhibit No. 31.")

THE WITNESS: The cone was set up in the usual way as a part of a Fada loud speaker and was driven in the usual way in the so-called dynamic method.

It was the standard dynamic Fada equipment that was used for that purpose and was simply removed from it.

I will tell you why the frequency was indefinite in the machine which I employed when I got as low as 60 or 100 or 120.

In that particular kind of a device they are operating at the lower end of the scale, where the movement of the condenser that controls the frequency is not very accurate and I did not exactly believe it at that end of the frequency and checked the matter by beats that I got from a 60-cycle alternating current by ear, and it was quite late at night and I did not follow the check up far enough to know whether I was getting a beat of 60 cycles or the first harmonic of 60 cycles or 120, and it is simply between 60 or 120.

The machine checks up above 200 cycles very well with my experience with machines that have been quite accurate on higher frequencies.

The next cone pattern illustrates the vibrations at 400 cycles, the lighter parts being where the carborundum was thrown off and the darker parts being where the carborundum remained.

This pattern illustrates what is termed radial nodes.

That is illustrated by these dark lines here made by the carborundum. Where the carborundum is not present the vibrations take place violently and throw the carborundum off.

MR. DARBY: I offer in evidence the second cone.

(Received in evidence and marked "Defendant's Exhibit No. 32.")

THE WITNESS: The next one was taken when the frequency was 800 cycles and the carborundum being thrown off where the vibrations are violent.

This pattern illustrates the presence of flexual waves.

MR. DARBY: I offer in evidence the 800-cycle pattern.

(Received in evidence and marked "Defendant's Exhibit No. 33.")

THE WITNESS: The pattern at 400 cycles, Defendant's Exhibit No. 32, shows flexual patterns.

This next structure is one obtained operating the device with 1200 cycles. That pattern shows flexual waves.

The pattern, Defendant's Exhibit No. 31, the 60 to 120 cycles, also shows flexual waves.

MR. DARBY: I offer in evidence the 1200-cycle pattern.

(Received in evidence and marked "Defendant's Exhibit No. 34.")

THE WITNESS: The next one is a pattern obtained when operating the device on 1600 cycles.

That pattern also illustrates flexual waves.

MR. DARBY: I offer the 1600-cycle pattern.

(Received in evidence and marked "Defendant's Exhibit No. 35.")

THE WITNESS: The next pattern illustrates the results obtained when the Fada cone was operated at 3200 cycles.

That also shows flexual waves.

MR. DARBY: I offer that structure in evidence.

(Received in evidence and marked "Defendant's Exhibit No. 36.")

THE WITNESS: The next pattern illustrates the results as obtained on 6400 cycles.

That pattern also illustrates flexual waves.

MR. DARBY: I offer in evidence the 6400-cycle pattern.

(Received in evidence and marked "Defendant's Exhibit No. 37.")

THE WITNESS: The limits of audio frequency employed in the reproduction of broadcast sound waves may vary, but usually it is from some place in the neighborhood of 100 cycles and 5000 cycles. There are extreme cases that some pipe organ music may go down very close to 30 cycles or thereabouts, and also some broadcasting stations may broadcast frequencies which represent an audio frequency of 12,000 or more.

By THE COURT:

Q. 32. Is 12,000 on the same basis as your 5000 cycles, or would your 5000 be converted into 10 for purposes of comparison? As you are dealing in 60 to 5000 cycles, then do you mean 12,000 cycles; is that what you mean, or am I all wrong?

A. The higher pitched instrument would produce say 4000 cycles of audio frequency and musical frequency. It is possible that you would have a third harmonic of that produced and the third harmonic might be carried through and radiated by the radio broadcasting station if the broadcasting station is built to accommodate that higher frequency.

Q. 33. Do vibration and cycle mean the same thing?

A. Sometimes when you are talking about sound, they sometimes say audio frequencies, meaning the cycles that occur, or you sometimes say the pitch, and you mean the same thing. If you say 1000 audio frequency you mean that the note has a pitch of one thousand. The two words mean the same thing.

Of course, when you are considering that in air it becomes sound waves in air of 1000 alternating compressions and expansions of air, but in broadcasting and in these devices it is necessary to transfer these frequencies from one thing to another. You have the mechanical devices and electric currents.

Q. 34. I see. Then the audible frequencies in adio transmission range from somewhere around 100 o what?

A. Ordinarily from 100 to 5000, and in extreme ases from 30 to 12,000.

THE WITNESS: The average orchestral piece, I ould say, would be between something over 100 and 800, or something like that. You can call it pitch or udio frequency.

These particular frequencies illustrate that when hese audio frequencies that are represented here from n the neighborhood of 60 to 120 up to 6400 are received s part of the music that they will produce vibrations f these cones similar to what are shown in these sand a ern exhibits.

Sand patterns for the intermediate frequencies ould be of a pattern differing in characteristics omewhere between the characteristics of upper and ower limits of frequencies employed.

For example, a 6400 frequency which you hold in our left hand has a tendency to produce concentric ings and the one that you hold in your right right has a lower frequency, 3200, and that is more or less of a ross between radio nodes and concentric nodes and nything between there would be more on the order f concentric nodes.

I am familiar with the microphones used in radio broadcasting. I have seen a great many of them.

The diameter of the microphones employed in radio broadcasting at stations which I have inspected have a diameter of about 1½ inches of the actual microphone diaphragm or tympanum.

CROSS-EXAMINATION.

Those diaphragms of 1½-inch in diameter are flat. They are made of metal which from the feel of them is quite thin.

This diaphragm does not carry a small coil, in a microphone. The diaphragm is not supported in front on a pole, a magnet pole.

I am thinking of the microphone which has carbon granules.

The answer I gave Mr. Darby was with respect to the diaphragm that drives a little button that compresses the carbon granules in the ordinary type of microphone.

This sand pattern, which is Defendant's Exhibit No. 37, of the cone vibrating at 6400 cycles per second when compared with Exhibit No. 36, which shows the diaphragm vibrating at 3200 cycles per second, shows that there are smaller but more numerous concentric circles in the diaphragm vibrated at 6400 cycles than in the one vibrated at 3200 cycles.

Approximately so. Possibly I better look a little closer at those. These are almost concentric, these lines here, and if extended around there, would be more concentric and these lines here in the 3200 run some towards the center and if I had something going above 6400, it would make circles right around that point there.

The reason that it does not make circles in either one of these two exhibits, No. 37 or No. 36, is, that the radial nodes break the circumferential nodes up so as to produce this pattern which evidences the presence of both radial nodes and concentric nodes.

In the pattern of the 3200 vibrations, I agree that the radial nodes are less numerous and further apart than are the radial nodes in the pattern at 6400 cycles.

The pattern of 6400 cycles is not entirely radial. Part of these are principally concentric and there is nothing radial in that portion there. In that particular portion it vibrates in concentric nodes.

So far as the radial nodes are present, they are less numerous and further apart in the pattern at 3200 cycles than in the pattern at 6400 cycles.

When you look at the Exhibit No. 35 which is the pattern at 1600 cycles, you find the radial nodes still less frequent and further apart than in the 3200 pattern. And more pronounced.

I probably should say that the radial nodes are very evident in the lower frequency of 1600. They are less numerous and further apart?

As you go one step further down the musical scale to Exhibit No. 34, which is the pattern at 1200 cycles, the radial nodes are again less frequent and further apart.

Those radial nodes are usually described as being due to one portion on one side of the node moving down and a portion on the other side of the node moving up, so that the actual movement along the point between the two, is very small in comparison with the amount of movement on either side.

And so constitutes a node between two regions of wide excursion on the two sides of the node. Those radial nodes are due to waves in the material of the cone, which waves are extending circumferentially around the cone.

The waves that I referred to in my direct examination as flexual waves shown on these patterns are waves which have circumferential nodes and which flow radially through the paper.

Looking at the pattern taken at 400 cycles, Exhibit No. 32, this pattern has not any definite circular nodes.

Radial nodes is the only thing that appears definite to me in that pattern.

That is true also of the Exhibit No. 31 taken at 60 to 120 cycles, that does not show any circular nodes.

There is no indication that I see in this particular thing of the circular node but as to moving bodily it does not move bodily of course if there are some portions that move in one direction and some portions in the other.

If I kicked a football through the air that football would move bodily. And the football would simultaneously be undergoing movements of deformation.

In this pattern which I referred to in my answer before the last, that is, Exhibit 32, I did not say that there was not any flexual wave. One portion comes in and another portion goes out.

I am referring now to the radial nodes as covered by the flexual waves.

Mr. Darby in his examination did not use the word "flexual" waves to mean only the waves which produced concentric nodes.

I will call those waves which produced concentric nodes, radial waves.

As I understand it, if we have our terminology correct now, I would say that on Exhibit No. 32 there are no radial waves that appear, but concentric waves.

That means that at that frequency the whole cone is moving without enough flexure to produce radial wave between the apex and the base of the cone.

I have made patterns like this on other cones than these which have been put in evidence.

I have made them on cones in which the cone was supported by an annular rim of paper instead of an annular rim of cloth.

As to how the sand patterns produced on a cone supported by an annular rim of paper instead of an annular rim of cloth compare in general with the patterns produced on these cones which have been put in evidence, I am afraid that is a little bit complicated. I never made tests with cones of a higher pitch or high

angles as that, 45 degree angle, before, with an annular rim of any kind.

The ones that I have tried as a rule are of less pitch, more nearly something like 22 degrees instead of 45. This is about 45.

They also showed this characteristic pattern as the frequency changed; that is, a pattern which at lower frequencies showed radial nodes and no circumferential nodes and at higher frequencies showed circumferential nodes increasing in number as the ferquency increased with a variation in that this change from one to the other would occur at a lower frequency where the angle is less steep.

That characteristic pattern in general with some qualifications was produced whether the cone was supported by a paper rim or by a cloth rim.

As to those qualifications, the ones where they are supported by a paper rim, the patterns went out to the paper rim so that the paper rim would be a part of the whole diaphragm. With the cloth or felt around there, there was no particular indication of what happened on the cloth or felt.

There is only the additional qualification of resiliency and weight.

As to the question of if the resiliency and weight of the cone being equal, would there be any other qualification with respect to the pattern cone between a cone on the one hand supported by a cloth rim and on the other hand supported by a paper rim, I would say that if that was possible, to get the resiliency and weight identical in both cases, the portion inside of the cone proper should be the same thing.

And in any case the general pattern has the characteristic appearance of radial concentrial nodes as the frequency occurs, as a general rule, they would become concentric.

DAYTON C. MILLER, resumes the stand.

DIRECT EXAMINATION (Continued).

As to the accuracy of sand patterns reproducing what actually takes place in a cone speaker and how long that mode of visible representation has been known, I have this to say:

That method of investigating the vibrations of diaphragms, plates and bars was very thoroughly developed and explained in a published book by Chlaidni, of Leipzig, in 1802, and it has been followed by other publications of his, and the method has been a common laboratory method of studying such things and it is considered as being an adequate representation of the formation of the nodes and loops and plates and we have used it in my own laboratory in studying the vibrations of diaphragms an inch and a half and two and three inches in diameter up to and including such things as the sound board of a grand piano and it gives information regarding the vibrations at different frequencies and complex frequencies in the manner that it has been employed in the testimony here given.

I have made hundreds of sand patterns of small diaphragms of telephone size and larger and up to piano sound boards, including every tone on the piano individually photographed in its sound pattern.

I have this to say as to the different characteristics of the respective device that is being employed for making sand patterns:

The device shows the manner in which the vibrating surface breaks up into what we call the node or pattern and it breaks up in different shapes or sizes of areas depending upon the mass of the vibrating diaphragm and upon its thickness and upon the frequency and upon the amplitude of the force to the same extent applied, and any variation in the structure of the vibrating diaphragms such as little internal changes in

the stiffness, changes in the thickness or massiveness of it and in the case of the diaphragms we are speaking of here, these paper diaphragms, modification in the material due to a little greater thickness of the paper or thinness of the paper or the presence of a heavy particle or a thick thread in one place or another or the presence of the joint where the paper cone is fastened together with cement, and all of these conditions will modify the exactness of the pattern so that the pattern is not always, and in fact rarely is perfectly symmetrical.

It may take a variety of shapes and for different frequencies these figures oftentimes assume what seem to be almost capricious shapes and forms. It is an adjustment of the frequency vibration of the energy involved to the particular area of the surface which must respond and reproduce that particular sound.

As to the limits of the frequencies that affect the ear of the average person, if we are listening directly to an orchestra we would hear sounds which would probably vary from thirty or forty vibrations per second up to eight or ten thousand. In the radio reproduction the limits are more apt to be from 100 to 5000 or a little more. The ordinary radio reproducer of the present day does not reproduce either extreme with exactly proper proportion. It fades off a little at both extremes.

The audibility of the ear is commonly stated as starting at sixteen, at the lowest, but a grand piano has for its lowest vibration twenty-seven per second.

The maximum audibility of the ear, as far as it is verified, is about 23,000. It is an acute ear that hears 20,000 and it drops down to 18 or 15,000 with age or lack of sensitivity. The highest tone on the piano has for its fundamental about 4200, but the first overtone will have twice that number, 8500, and that might be

present in orchestral music, but the fundamental tones of the grand piano vary from 27 to 42 or 4300.

In these sand patterns that have been here produced, ranging from 100 to 5000, I understand that the patterns there shown are for those particular fixed frequencies given.

In receiving an orchestral piece with a Fada loud speaker, the cone would vibrate in accordance with the pattern on any one of those individual pattern cones for the frequencies specified.

In actually receiving an orchestral selection by wireless, the tone received is a very complex one containing very many frequencies and these various frequencies must be simultaneously produced from the cone so that we find a single one of these patterns, but we have a composite of many patterns superimposed, but in order to reproduce the audible sound of the particular frequencies specified, we must have substantially the equivalent of the areas indicated in these sand figures vibrating and actually producing that tone. The combination becomes vastly more complicated, but it does not change this statement in regard to these particular frequencies.

Some time this morning reference was made to the difference in sound between 5000 cycles per second and 10,000 cycles per second.

It was spoken of, I think, in connection with the implication at any rate that frequencies above 5000 might be left out of a reproduction of a speaker and it might be thought that that was omitting a very large part of the range of frequencies.

The piano which I mentioned, having its range from 27 to 4200 or thereabouts, represents seven and one-third octaves of music, and the next octave above the higher one would have twice as many vibrations, so that comparing the lowest octaves the number of vibra-

tions would be confined within the limits of 27 and 54.

In the top octave from 4200 to 8400 would only be one octave, and so, while it sounds like a large number of frequencies omitted, it is only one octave and that octave above the octave of the grand piano.

In dealing with the musical effects, we are concerned not with the actual ratio of the numbers of the frequencies, but with the ratio of the numbers one to the other, a geometrical ratio, or as we often referred to it as a logarithmic ratio, and so the numbers in the higher octaves are higher and in the lower octaves it is lower.

The study of the human voice shows that the frequencies of the fundamental tones, the foundation tones of the voice, will range from somewhere around 80 for a very low voice up to perhaps 400 or 500 for a child's high voice.

The fundamental tone in my own voice, as I have measured many times, I consider at 155 is the foundation tone of my natural voice. I have measured bass voices having a foundation tone at frequency of 90. The sounds that enter into speech include the foundation tones of the voice and such overtones that are necessary to make the speech sound intelligible.

A few years ago before broadcasting telephone transmission was so designed that it was limited to a higher frequency of 2200, and that is not quite enough to give adequate transmission of speech.

If the frequency is limited in the neighborhood of 3000, it will then transmit the essential parts of speech. With the advent of radio broadcasting and a much greater interest in the transmission of music over telephone lines, the upper limit has been increased from that limit of speech of about 200 up to varying 4000 or 5000, which gives a very satisfactory transmission for music as well as speech.

I have examined the diagram produced and it represents in a general way the ranges as shown on the musical scale and the musical instruments and with regard to frequencies.

MR. DARBY: I will offer this chart in evidence.

(Received in evidence and marked "Defendant's Exhibit No. 38.")

THE WITNESS: I am familiar with the Western Electric double cone structure. I have examined such a structure. We have several of them in the laboratory where they have been in use experimentally for some time. I have not measured the nodal patterns on that particular structure or a structure of the double cone type.

From my knowledge and experience in the art as to whether or not the same general character of nodal patterns would there be obtained as are obtained with various other diaphragms which I have mentioned, my general opinion would be that they would be certainly formed in accordance with the general principles which we have been explaining.

Referring once more to the Hopkins patent in suit, 1,271,529, and particularly to the passage beginning at page 2, line 109, as to what I understand to be meant by the bodily movement of the cone there described, I should interpret the bodily movement of the cone to mean that all parts of the cone, all of the material constituting the cone moved back and forth in parallel straight lines through equal amplitudes of movement simultaneously. It is what is sometimes referred to here as a piston movement or a plunger movement. The bodily movement as I should interpret it there is this simultaneous movement of all parts together. It is not a fact that no bodily movement takes place in the Fada cone structure in operation. I should say that some bodily move-

ment occurs. Bodily movement with the suppression or elimination of wave movement does not take place in the defendant's structure as it is used in the reproduction of speech and music or as it is used as a radio loud speaker.

CROSS-EXAMINATION.

What I mean to say, is that the defendant's cone does move bodily, but the bodily movement is accompanied by wave movements in the material of the cone, wave motions which are essential to the reproduction of the sound and music.

I said in my testimony today that the Hopkins patent says that the altitude of the conical portion should be one-quarter of the diameter of its base. I thought I was speaking correctly, and if not I should like to correct it, to what is stated there. It says the altitude of the conical portion of the tympanum should be at least one-quarter of the diameter of its base. I agree that in the defendant's cone the altitude is not less than one-quarter of the diameter of the base. So in that respect I think it complies with the statement of the patent.

I said in my testimony that the Hopkins patent discloses a cone having a rim which has not concentric corrugations in the rim. I said that in connection with the discussion of the Stroh patent.

This Hopkins Patent No. 1,271,529 discloses the idea of putting concentric corrugations in the rim.

It says it is possible to form radial or concentric corrugations in the plane peripheral portion.

Concentric corrugations in the plane peripheral portion would increase the flexibility of the rim.

In my testimony yesterday I referred to the amplitude of vibration of sounding bodies and said it was a factor in the volume of sound.

I referred to the pitch of the sound and identified it with the frequency of vibration.

The patent here in addition to referring to the amplitude in the pitch refers to the timber of the sound.

Timber means what I more commonly call tone quality. Sometimes it is called tone color. The timber of the sound depends upon the composition of the sound when it is considered as made up of partial tones, fundamental and its harmonic overtones, and the various combinations of that kind determine timber or tone quality as used in distinguishing the tone quality of one instrument from some other musical instrument or one voice from another.

For example to reproduce the timber of a violin it is necessary that the reproducing body should have vibrations which represent not only the base tones but also the overtones of the violin.

It is necessary that those tones be reproduced in substantially the same relative proportions as they are produced by the violin.

For a good musical reproducer it is desirable not only that it should reproduce tones over the range which I have already discussed but that those tones should be reproduced over that range, each tone in substantially the same relative volume to the other tones as occurs in the original music.

It is a fair statement that it has been the continuous effort of builders of certain reproducing devices to increase the range of the tones reproduced in the first place, and to reproduce them with faithful comparative volumes throughout that range.

That has been the aim of those concerned with the essential acoustic qualities of such instruments.

On this chart or diagram of mine, Defendant's Exhibit 38, the legend here Tuber Base Viole which appears at the frequency line 40 means that that note on the Tuber Base Viole has a frequency vibration of 40 vibrations per second.

Where the kettle drum appears opposite the numeral 48 it means that its frequency of vibration is 48 per second.

That chart was used to illustrate the explanations which I was making and is not a chart of absolute determined frequencies.

Where it says Cello with a dash and the words Base Singer opposite the line 64, it means that a Cello or Base singer emits that frequency note. And the Base Clarinet 70, and the French horn 86.

Those are the frequencies of the lowest tones which those instruments properly produce in musical performances. There are other frequencies from that point up to a higher limit indicated on the same chart.

It is my opinion that there are very few loud speakers of the present day which will emit the tones much below 100 frequency with the proper proportion. They do allow some small part of it to get through and we hear that. By proper proportion I would say 50 or 60 per cent. of the proper amount, and I do not think that is going through.

The constant effort has been and still is to include those tones. That is a desirable end.

I think I should not say the constant effort has been, because I think it is possible, but in doing so it might lead to a cumbersome structure which will have disadvantages in being so large and awkward that they would prefer to make a compromise and sacrifice something of the desired ideal for other reasons. That certainly has been the case in manufacturing in the past, but the person actually interested in the reproduction, the scientific or experimental man would certainly make the effort to increase this covering capacity.

I have given an illustration twice, in my testimony of the modes of vibration of a sound producing device and a sound receiving device. As to whether

or not I have taken the position that because the diaphragm of a pick-up microphone will vibrate accurately to sound frequencies when excited by certain waves and air that it results from that that that same diaphragm can be vibrated by electrical energy to reproduce those sounds in air. I would say that is substantially the idea that I have in mind, but the idea that I did intend to convey was perhaps a little more general than that. It is to the effect that the microphone diaphragm must possess in its movements all of the essential and actual vibrations of the acoustic impressed in so far as those effects are reproduced at the other end. And therefore, it must have vibrations that are the acoustic equivalent of the vibrations which are reproduced at the reproducing end in so far as they are acoustically present and I said in both cases that that was covered by the degree of satisfaction which we have in the reproduced sound and is limited by that degree of accuracy which we hear.

There may be some vibrations that we do not hear and those do not interrupt us in the acoustic reproduction.

That is, I say that both the devices, that is, the diaphragm used either as a sound receiver or as a sound emitter, the devices must vibrate according to the sound.

And I went on to say that it makes no difference which side is the originating side and which side is the receiving side.

I said that and I repeat that the essential characteristics of vibration in the receiving diaphragm and the transmitting diaphragm, that the characteristic of a sound that you get from a diaphragm were produced in the first place from the transmitting diaphragm, therefore, the diaphragm which is used as a transmitter is capable of vibrating in the same characteristic manner as is the diaphragm which is used as a receiver.

If we had a receiving pick-up microphone in this oom and you discharged a pistol in the room the nicrophone would pick up that sound and generate n electric current wave corresponding to that sound n the electrical system.

The diaphragm of those pick-up devices is a flat liaphragm as far as I know. I stated in my previous estimony that it might be as much as three inches in liameter. I have used them. Some one and a half. I nave one in my laboratory now which is nearly three nches in diameter as well as the smaller size.

I do not think I can take that microphone dia- hragm and vibrate it in this room so as to reproduce he sound of the pistol shot when it is a part of the eceiving microphone. But I can have a diaphragm rranged in some fashion, a diaphragm in a trans- nitting device which would reproduce the sound.

Suppose I take the flat diaphragm just as it is in he pick-up, supported by annular rings.

As to whether or not I could vibrate it to repro- duce the pistol shot I would have to answer that I could not use a receiving microphone as a reproducer without reconstructing the instrument.

You can construct a device that would have some way of vibrating at its center. You can take an elec- trical current that had been produced by the micro- phone pick-up and apply it properly to the center of a similar diaphragm to vibrate that diaphragm.

I should say that would reproduce the pistol shot because I should say that in the sense I am talking about, that is what happens in a telephone receiver, that the diaphragm is so vibrated by means of the electric current.

When I speak of the telephone receiver I am talk- ing about producing sound when the receiver is held up to the ear, but it will be produced even if it is not held up to the ear.

I can visualize this flat diaphragm mounted in annular rings. You state it is a thin diaphragm from one and one-half to three inches in diameter and nothing else. You agree that you can vibrate that diaphragm with electric current corresponding to these sounds.

When you say "with nothing else," I do not know what you mean. If you mean literally nothing else you cannot do that. You have to have a magnet behind it, you have to have the telephone receiver, you have to have a device that is competent to vibrate a diaphragm.

If I assume an actuating device, then my answer is yes, it will vibrate and reproduce the quality of sound.

Not necessarily the volume. That depends again on the device and the power available and so forth. Ordinarily a telephone receiver will not reproduce a loud volume. It does reproduce the quality.

If you took the center of that diaphragm and drew it into a conical shape as in these little sound boxes of the prior art, it would have no effect on the quality of the sound.

It would probably require a different amount of driving force to operate it because of the increased stiffness in the diaphragm itself.

As to whether it would be a better or worse sound reproducer I do not think it would change the quality of the sound. If you took everything exactly the same except that you stiffened the diaphragm by conical means or otherwise, and you had the same driving force, the stiffer diaphragm would have the proper quality of sound but less volume.

It would be capable of producing a louder sound with the adequate driving force to do that thing.

That is because the curvature of the cone increases

the stiffness of the diaphragm and therefore causes more area of the diaphragm to move without flexing.

Let us assume that that diaphragm is three inches in diameter, and with no baffle, and you vibrate that three-inch cone with ample power and no baffle, you ask me what would be the effect? In other words, what did I mean by saying that the air will leak around the edge of the cone?

I mean to say that when the surface of the cone moves forward so as to produce a certain amount of compression in the air in front, the air is a fluid, an elastic fluid, and the increase in pressure on the front due to the forward movement will cause some of the air in the front to flow around the edges of the cone and take its place behind and in the forward movement there has been left a sort of rarefaction, as we call it, and the air from the front would move around the edge to the back and to that degree would neutralize the effect of the forward movement of the diaphragm and lessen the volume of sound radiated to a distance from the front of the diaphragm.

That is the compression wave that would be started in front of the cone, as it moved, would be partially neutralized by the air running into the depression or rarefaction behind it.

We will assume that we vibrate that cone at 4000 cycles per second in the one case and at 100 cycles per second in the other case. That neutralization due to the lack of a baffle would be a larger proportion of the effect for the lower frequency and more time is available for the neutralization to take place in each vibration.

Without a baffle a small cone will reproduce the higher frequencies better than the lower frequencies.

For a cone three inches in diameter, and we will say having an angle of inclination of thirty-five or

forty-five degrees made of the same kind of paper that the defendant's cone is made, as to whether or not for frequencies like 4000 cycles per second, that the cone would move substantially without flexing, a three-inch cone, I have this to say:

I think there would be some flexing but not as large as in a larger cone, but at 4000 there would be flexing in a cone three inches in diameter. It would again depend on the amount of power applied on the amplitude of vibration.

I have not heard the loud speakers manufactured by the Radio Corporation referred to here as Rice & Kellogg loud speakers.

As to whether or not my attention has ever been directed to a paper entitled "Notes on the development of a new type of hornless loud speaker," by Chester W. Rice and Edward W. Kellogg, of which you show me a copy, I am not familiar with the paper. I may have it in my files, but I am not familiar with it at sight.

I am not personally acquainted with those engineers. I am not directly acquainted with their professional standing.

I am not familiar with their contributions to the arts.

In a recent answer I said that the cone I thought would flex somewhat at 4000 cycles if it were three inches in diameter but not so much if it were a larger cone.

When you impress these vibrations on the apex of one of these cones, the apex starts to move forward, compressing the air in front of it.

The paper of the cone, having some flexibility, bends somewhat, so that as you recede toward the edge of the cone the paper towards the edge does not follow in exactly the same time as the apex moves; it lags behind it.

That would be a correct statement for certain low frequencies with certain perhaps small amplitudes of vibration. For single pure frequencies it might move in the fashion that you have described.

That is, as you move the apex of the cone owing to the flexibility of the paper, the cone would flex.

I mean that the amount of flexure and the point or points at which flexure occurs would depend upon the frequency of the vibration and its amplitude.

I would say the lack of the flexure as well as its mere size.

These radial waves giving rise to circular nodes that are shown here in the sand patterns are the reflection of that flexing of the cone.

That is a part of the explanation, but when the material is vibrated with certain frequencies depending upon the stiffness of the mass of that material, that particular frequency with a certain driving force is capable of setting in vibration only a certain area of this cone, and if the cone is larger in area than that particular area in order to take up those vibrations it must divide into numerous nodal areas, each of which then has the frequency impressed upon it. That is, it must flex. That is a nodal line.

I agree that with a small cone, I have spoken of one three inches in diameter operating in free air without a baffle, a given range of sounds would be produced better in the high frequencies than in the low frequencies.

With a larger cone the tendency as a general thing would be as the cone got larger to produce the low frequencies in more even volume.

I have explained how it is that impressing a sound on the air with one of these little surfaces there is this slippage or leakage of the air around the edge of the cone which neutralized to some extent the production

of sound. That is due to the elasticity or fluidity of the air.

That is, in transforming the electrical energy which is applied to the cone into sound energy, you encounter this difficulty arising out of the elasticity or fluidity of the air which tends to neutralize the sound produced to the limited extent around the edge of the cone.

When you are considering a pick-up device, a microphone, where the sound vibrations of the air strike the cone or whatever surface it is, and it in turn moves some element which varies or creates an electric current you encounter that difficulty arising out of the fluidity of the air in the same manner. I will explain why the air wave striking this diaphragm passes right around the edge into the back side in exactly the same way.

When you are using the device as a pick-up, you are transforming the energy of the waves in the air into electrical waves. As to whether or not when you are transforming the energy of waves in the air into electrical waves you there encounter this difficulty due to the slippage of the air, my answer is "yes," because when the air wave from the voice strikes this diaphragm, the purpose is to have the maximum amount of energy operate to move this.

If the air wave comes up against the diaphragm on this side and slips around to the back side and keeps this from being pushed forward as much as it would, and in an analogous manner and in exactly the same degree as in the first case.

You have there a sound wave striking the surface, a sound wave in the air, of large area already, filling the room, and the only part of it which is transformed into electrical energy is the part that strikes the surface of the pick-up.

If that is enough to move the pick-up it produces the variation in or generates the electric current which is amplified and sent over the line.

I agree that a very small area exposed to the air waves resulting from a pistol shot in this room would be sufficient to move a pick-up so that it would make a variation in electric current which could srbsequently be amplified by known amplifying means and so made into an effective telephone current.

These condenser microphones that they use in radio today are open to the air on one side and closed to the air on the other.

There are no baffles extending out radially beyond the supporting ring, but the mounting is such that that leakage around the edge does not occur.

As to whether or not I know why it is that the defendant here has manufactured its loud speakers with cones of the size shown by the exhibits here instead of using the little cone, say two and a half inches in diameter, such as I demonstrated here the other day, I can only say that I presume that in their experiments with the thing they found the one they have chosen more acceptable for the purposes for which it is manufactured. I have no direct knowledge whatever.

Referring to the device that I demonstrated, that is Defendant's Exhibit 8, its diameter is approximately two and a half inches. The box in which it is mounted constitutes at once a baffle and resonator.

MR. DAVIS: Mr. Darby do you agree that that driving mechanism is a Peerless unit?

MR. DARBY: Yes.

THE WITNESS: The back cover of this box of Exhibit 8 is quite heavily padded. I do not know what the purpose of the designer was by putting that in. I had nothing whatever to do with the design or construction

of this device. That is equally true of Defendant's Exhibit 9. I have had nothing to do with the design or construction of any of these exhibits.

Yesterday in my direct examination I pointed out that the defendant's driving unit was a so-called dynamic drive and I also pointed to the fact that in this dynamic drive the coil which lies in the magnetic field is mounted on the end of the cone on a small tube, so that the tube truncates the apex of the cone.

I did not intend to convey to the Court the idea that this dynamic drive in that arrangement of the coil on the end of the cone was original with the Fada Company. That dynamic drive has been used many years.

You ask me to turn my attention to the various patents and publications that I have been asked to discuss and tell you whether I find in any one of them this mechanical combination, a conical-shaped paper device impressing sound directly upon the air, that is, without the interposition of a sound-box and horn, provided with flexible edges and coupled to a rigid frame. My answer is yes, I think you will find that construction in numerous of these patents.

The two patents by English are paper cones connected with the solid mounting by flexure surrounding ring. They may or may not produce the sound directly on the air without the interposition of a sound box and horn.

The English device is an ordinary phonograph sound-box. As it is used here it is used in connection with a horn.

As to whether or not I can find any device among these patents, not a sound-box and horn device, but a direct acting loud speaker which has a conical shape and is provided with flexible edges coupled to a rigid frame acting in free air, I think they were not so designed originally. They were designed to be used in

connection with a horn or with a sound-box, and where they are coupled to the edges.

You have on the table before you one of the diaphragms and supporting frame of defendant's loud speaker. It is setting on the table with the open end of the frame, that is, with the base of the cone resting on the table, and the cone standing vertically. It is disconnected from the driving unit. Those brass springs that you are pointing to are the springs that I referred to as maintaining the position of the cone. The cloth rim supports the cone in the position that it now is.

You are pressing down on the edge of that cone. I observe that it moves downwardly. You take up the pressure. I observe it moves upwardly. It returns to its neutral position. The cloth rim caused that. I agree that in the operation of this cone, the rim yields so as to permit the movement of the cone as you are illustrating there.

When I said that the rim of the Fada cone is ineffective in an acoustical sense, I had in mind in that answer that it was not effective in generating sound waves in the air. When I said it was not effective in the acoustical sense I meant that the cloth rim itself produces no effective sound. I think it produces a sound that would be inaudible and would have nothing to do with what we hear from it.

As to what I meant when I said it did produce some sound—when I spoke in that way I meant that sound would be any kind of a wave motion in the air of any sort, even a minute sound or a confused sort of a sound. I did not say that the rim did produce any sound.

The point of my assertion is that the cloth rim of the Fada cone is not made of a vibratile material. It serves as a baffle.

In the device illustrated in the drawing of the Hopkins patent, the flat annular ring serves as a baffle.

In the same sense the porosity of this cloth rim of the Fada structure that you spoke of is not sufficient to prevent it from serving as a baffle.

RE-DIRECT EXAMINATION.

A device operating with a frequency as low as 50 cycles per second or thereabouts as a plunger or a piston would not represent what takes place when it is operating for the reproduction of broadcasting speech and music.

I was asked if any of the patents of the prior art showed a combination of three elements comprising a conical-shaped paper device provided with flexible edges coupled to a rigid frame used in free air. I call attention to the Dann & Lap Patent No. 338,660. There is there shown a conical device. It is coupled with a rigid frame. This is employed in front of a box enclosing the device and in that case it would not be in free air.

In a similar case the Fada loud speaker, enclosed in its cabinet, would not be in free air.

I call attention to the Maxwell Patent No. 216,051. That is a conical device shown. It is coupled to a rigid frame. It is not used in free air. The air is substantially confined the same as is the case in the Fada loud speaker in its cabinet.

I call attention to the Lumiere Patent No. 1036529. There is there shown a device which is described as a conical device. With a special meaning to the word conical. It is described as a double cone.

I call attention to claim 21 of the patent. It is stated to be arranged to be substantially in the form of a double cone. It is coupled to a rigid frame. It is not used in free air in the sense of the term free air that I have been employing in connection with the other answers, because of this surrounding short horn which I have described as a baffle.

Mr. Davis took a cone which has not been marked in evidence, which is a Fada cone and which is demounted from its support and exerted substantial pressure on the end, and asked me if it returned and also what caused it to return. I perform the same experiment that Mr. Davis performed and as at present mounted that cone comes back to its normal neutral position as compared to the Defendant's Exhibit No. 3 with respect to its mounting.

The cone, Defendant's Exhibit No. 3, is in its normal position slightly displaced by the action of the spring supporting the center so that the springs combined with the other determine the neutral position.

As to the mounting of the cone with which I performed that experiment, I have this to say: In this one the only force restoring this is the force of the cloth rim. In the other one there is a combination of the two forces.

In the cone mounted for operation it is evident that the springs are under tension as they stand, and that tension is produced by the mounting at the rim.

Therefore, the cone is slightly displaced in its normal position by the cone of the spring combined with the restraining action of the cloth rim, whereas, in the experimental one the cloth rim only is acting.

The free position of the demounted cone is not the normal neutral position of the cone mounted for use.

In general that would be the statement.

RE-CROSS-EXAMINATION.

The things I have referred to as the springs are the three metal arms of brass that project from a collar around the tube at the center of the cone.

As to the primary purpose of putting those things in the Fada speaker, my impression is that the purpose is a double one, one to hold the wire ring in its

central position in the magnetic field and the other to assist in restoring the cone in its normal position because in continued use and various conditions, the cloth rim will in many cases be much too slack to determine a satisfactory neutral position alone and the springs are required to make a definite normal neutral position for the vibratory motion. The two effects are combined and constitute the purpose of these brass springs.

The tube on the cone which carries the wire coil projects into an annular air gap in the magnet of the dynamic drive.

That annular air gap is of rather small dimensions and rather closely fits around the tube.

The tube has to be accurately centered in order that it will not scrape against the magnet poles as it moves back and forth.

That is an essential and desirable condition.

Looking at the Dann & Lapp patent for a moment, that device is a telephone transmitter.

You are intended to speak into the mouth itself, B.

That board which is shown in Fig. 1 and which has hinges on it, I recognize to be the usual door of the old-fashioned telephone box, where you would have to turn the crank and the mouthpiece was in the door of the box.

As to what was probably the diameter of the smaller end of the mouthpiece B in those devices, I can only surmise, but I should take it to be one inch.

If the constructor built the devices according to the instructions of the patent, lines 38, and following on page 1, the patent says that "It shall equal and even slightly exceed that of the contiguous inner end of the mouthpiece B, of which it forms practically a conical extension." If the constructor followed those instructions, the cone would equal or slightly exceed an inch in diameter.

Turning to the Maxwell patent, that is the device hat has been reproduced and offered in evidence, or hat is the device of which Defendant's Exhibit No. 12 s said to be a reproduction.

I have not seen the device of Fig. 2 reproduced.

I do not know whether or not the device of Fig. 1 s the thing that is patented in the Maxwell patent.

As to where in the patent I find any justification or a device like Exhibit 12-A which has only one dia- hragm, my understanding of that is that it is a demon- tration of the manner of forming the phonic dia- hragm in the manner described in this patent which onsists of a membrane, soft and pliable, fastened to hole in a board and then stretched by a weight and llowed to dry, in that manner forming a phonic dia- hragm and this is a demonstration of how a diaphragm nay be formed in that manner as well as in other man- ners that they have illustrated.

I do not find in the Maxwell patent any disclosure f any device which has a single diaphragm.

I refer to the statement on page 2 of the patent as ollows: "The vibrators are stretched and held taut y means of the button e on the wire T; and but for he button i on the wire outside of the box the vibrators would collapse when the wire was relaxed."

I am asked if the vibrators in this Exhibit 12 are f that character. My answer is, the two vibrators are in that case held taut by a wire connecting the two which stretches them both at the same time and one against the other. In this case they are both stretched against the side of the box by the outside button i.

These vibrators in Exhibit 12, if they were not held taut, would collapse in the sense that this would collapse because they are both made of flexible mem- brane which is stretched under weight and then dried and hardened in their place.

This device in Exhibit 12, if you unfastened those wires, would not collapse, using the word collapse in its ordinary sense.

I have not seen sand patterns made on the Western Electric double cone.

I said that that Western Electric cone would have these vibrator motions which give rise to the sand patterns, that is, the material of the cones themselves would vibrate.

I expressed it as my expert opinion that such vibratory nodal figures would be produced on that cone.

Assuming that the cone is moving in a rectilinear movement back and forth, but at the same time is vibrating or fluttering with these movements that are shown in the sand patterns, the sand pattern would not show directly whether there was a rectilinear movement, that is a movement of translation of the cone as a whole or not.

When you ask me whether the Western Electric cone, when it was vibrated to produce sound, there was any bodily movement of the front cone as a whole, I understand the meaning of the bodily movement of the front cone as a whole.

And I would understand it not to necessarily exclude accompanying wave motions.

I would think it was broad enough to cover a bodily movement whether with or without accompanying wave motions.

You ask me whether in that sense I would agree that in the use of the Western Electric double cone as a loud speaker, there was no bodily movement of the front cone as a whole. My answer is, I should think there might be bodily movement of the front cone as a whole, certainly.

I understand what you mean when you speak of the joint between the two cones.

That is the base at the edge. That joint could act as a hinge and does act as a hinge.

I would not regard it as rigid and inflexible.

MR. DAVIS: That is all.

RE-DIRECT EXAMINATION.

I will refer to the Maxwell Patent No. 216,051. The second paragraph of the first column makes reference to a earlier patent of Maxwell.

MR. DARBY: I offer in evidence the Watts and Maxwell Patent No. 237,712 of February 15, 1881, not as an anticipation, but as showing the state of the art.

(Received in evidence and marked "Defendant's Exhibit No. 39.")

By THE COURT:

Q. 461. May I ask just one thing which I realize is outside of possibly this matter, but I am wondering what the witness would do with regard to the Fada devices here on the bench if there were a substantial amount of slack in the cloth at the outer edge of the cone. Would it serve effective as a baffle in the first instance?

A. Yes.

Q. 462. It would make no difference as a baffle?

A. No.

Q. 463. Would there be any difference in the volume or the quality of the tone given out by the Fada cone?

A. There would be no difference in the volume and certainly no appreciable difference in the quality.

MORTON ARENDT resumed the stand.

CROSS-EXAMINATION (Continued).

I will mark on this drawing, Exhibit No. 5, the distance of the diameter of the opening caused by the metallic ring in the Fada speaker.

I will call that distance dimension g. g in one case is equal to 6 25/32 and that is the small speaker and g on the larger speaker is 8¼ inches. I believe that you will find that this is substantially correct.

You requested me to measure item e again.

I have done so and the dimensions e are variable with respect to weather conditions. What might happen is that on the blue print and on the original laying out of the drawing the dimensions might have been what Mr. Darby said they were in his question, they are not permanent measurements as would obtain in structural material, but they vary with weather conditions and temperature and atmosphere and pressure, and so forth.

The figures which I have checked up are that e is 2¾ inches as measured by my direction some weeks ago or over two months ago and as measured through the variable climatic condition we have had here in the last three or four days it will come from 2¾ inches to above 1/32 of an inch more than that shown, 2¾ to 25/32. I will call it 13/16. From 2¾ to 2 13/16.

e for the large cone varied as I again made the measurements in the last few days from 4 to 4⅛ inches.

The measurements on this chart were measurements made by me and drawn under my direction. I actually made the measurements myself.

PLAINTIFF'S REBUTTAL PROOFS.

CLAIR FARRAND.

CLAIR FARRAND, called as a witness in rebuttal, on behalf of the plaintiff, having been first duly sworn, testified as follows:

DIRECT EXAMINATION BY MR. DAVIS:

I am a manufacturer of radio devices. I am president of the Farrand Manufacturing Company and also president of the United Research Corporation.

The Farrand Manufacturing Company is a licensee of the plaintiff here.

As to how long I have been manufacturing loud speakers using this cone of the patent, that is licensed under the patent, I first started in 1921 and continued in 1924.

The device that I manufactured in 1921 was a single cone. It was driven by so-called dynamic drive. It was sold on the market under the name of Phonotron.

The sale of that was discontinued and afterwards the Farrand Manufacturing Company organized and began again to manufacture these loud speakers in 1924.

This Phonotron was the first radio loud speaker manufactured under the Hopkins patent as distinguished from phonographs.

I have been connected with the Farrand Manufacturing Company as president since its inception. My duties include engineering.

I organized an engineering and research laboratory in that company and conducted investigations in acoustical and loud speaker problems. The engineering of the company has been done under my direction.

I have been manufacturing and selling these loud speakers of the cone type in competition with other manufacturers from the beginning of the manufacture of radio loud speakers of that type.

I have been familiar with the loud speakers manufactured by the Radio Corporation since it began manufacturing cone loud speakers.

That company has manufactured and sold the Radiola 100, the Radiola 104 and the Radiola 100-A and the Radiola 106. The Radiola 104 I believe was the first.

The Radiola 104 had a cone, the basal diameter of which was approximately 6 to 6½ inches. The rim was approximately half an inch in width.

The Radiola 100 had a cone very nearly 10 inches in diameter with a rim of approximately the same width, that is, ½ inch.

The Radiola 100-A was a smaller cone, I believe, about 8½ inches in diameter with about ⅝ inch width rim.

The Radiola 106 is the most recent of the Radio Corporation speakers and employs the dynamic drive as did the one other Radiola 104, this Radiola 106 has a cone with a basal diameter—I measured that and could I consult my notes on the measurement? It is eight inches and the over-all diameter of the tympanum including the rim was 8⅞ inches.

The rim was made of kid leather. The Radiola 100-A has been made with paper rim, one piece with the body of the cone. The Radiola 100-A used a paper rim in one piece with the body of the cone. The rim itself was serrated and cemented to a paper ring which was in turn fastened to the frame.

I have been familiar with the loud speakers put out by the Victor Talking Machine Company since they started putting out cone loud speakers.

The first type of loud speaker I am familiar with, the Victor Talking Machine Company, marketed, was one employing a Lumiere diaphragm and that is a pleated paper diaphragm made of a piece of paper of rectangular shape and folded and then formed round in a disc shape.

The loud speaker has two of these diaphragms in it, to one of which the actuating motor was applied and the other on the opposite side merely acted as a screen to enclose the device.

In that commercial loud speaker, the diaphragm, was of the same general construction although not the same size as Exhibit No. 16, it was much smaller.

This Lumiere type speaker stayed on the market for a year or eighteen months as I recall and then the Victor Talking Machine Company used in their phonographs or their electrical actuated phonographs and radio-receiving set combinations a conical diaphragm loud speaker built by the General Electric Company and sold to them by the Radio Corporation of America.

As a matter of fact, they used all types that I have mentioned except that I do not know whether they have as yet incorporated the Radiola 106 loud speaker as that is a quite recent addition to the Radio Corporation line.

As to how the size of the cone and the width and the material of the rim of the cone have entered into the practical problems of design which I have encountered in my experience in manufacturing these loud speakers, these are very practical items in designing a loud speaker to produce commercially in competition with other manufacturers of similar devices. This field is a highly competitive one and it is necessary to attain as good results as any one else in the same field can secure.

All these items affect the efficiency of the device and its quality of reproduction. Theoretically it should

be possible to produce a sound wave of loud-speaking volume with a very small diaphragm. This, however, has not been done practically or done in a commercial way. All of the devices that I am familiar with have been of fairly large cones. The first Radio Corporation model being the smallest.

The small cone, that is to say, a cone 3 inches in diameter, would have to be capable of a very large displacement in order to produce the same volume of sound as a larger cone at a smaller displacement.

Furthermore, to give the device a reasonable degree of efficiency so that it would be competitive, the cone must be light and it must be very stiff. Its support must permit this large axial motion. The practical difficulty encountered is that when you so construct a cone in this manner the flexible supporting rim is so loosely attached that the bell-like vibrations or deforming vibrations of the cone which have sometimes been termed parasitic vibrations, are not properly restrained and blasting or paper rattling results.

The larger size cone does not require as great an amplitude of motion and is therefore a more easy device to construct. When the size of the cone is decreased we find another difficulty encountered and that is the cone structure has a resonant period which has an annoying tendency to fall in the voice range or in the range of frequencies mostly used.

In present-day radio broadcasting reception, we deal with frequencies from 50 cycles per second to 5000 cycles per second. The lower frequencies being necessary to give the quality to the bass of the music, the higher frequencies at 5000 and as a matter of fact above 5000 (almost to seven and eight thousand) give the distinguishing quality to the sound which distinguishes a violin note from a flute of the same pitch, supplying the harmonics of the fundamental.

The fundamental period of a cone structure in the voice range gives rise to what has been termed muffing sounds which tend to render the speech inarticulate, and it sounds very much as if the words were spoken in a barrel so that an increase in size of the cone lowers this fundamental period and brings it below that point.

The fundamental period of the cone is due to two things, one is the effective mass of the entire cone structure including motor and the elasticity of the support of the cone structure. These two items are analogous to inductance and capacity respectively in an electric circuit.

The present-day cone design, and by cone design I mean the complete loud speaker, depends to a very large degree upon this resonance for the impression of bass in its response, and inasmuch as this resonance depends upon the support at the edge and the other parts of the cone structure, the response can be changed materially by proper choice of the supporting rim. The looser the support the lower will be the period of the cone structure, and the tighter the support the higher will be the period of the same cone structure.

In practically designed structures as small as 6 inches tend to have this resonance response in the voice range and it is very difficult to remove it therefrom.

When I said structures as small as 6 inches, I was referring to the basal diameter of the cone, more particularly to the Radiola 104.

If the over-all diameter of the tympanum, that is the cone plus the base were 9 inches, and the base occupied one-half the area, the base of the cone occupied one-half of the area, the diameter of the base of the cone would be 6.36 inches.

The tendency of designers in order to overcome these natural difficulties has been in the past few years, in the design of the dynamic loud speaker, to increase

the size of the cones toward the present-day range from approximately 8 inches, in some commercial models to 12 inches in diameter.

The history of these changes in size starts probably in a commercial way from the Pathe model which I believe is exhibited here which had an over-all diameter of about 8 or 9 inches, and then the next step was to cones of 17 inches in diameter, this largest size giving a more pleasing bass.

The next step was cones 36 inches inches in diameter, in this case still more pleasing bass. These structures were not enclosed in cabinets and were fragile and the public reaction against them hurt their sale.

They were actuated by a balanced armature form of so-called magnetic type driver. Not by a dynamic driver.

The public reaction called for a smaller type speaker which was made and enclosed in a wooden cabinet somewhat clock-like in appearance with a cone having a basal diameter of about 7 inches. These sizes were deficient in reproduction of lower tones and when the market swung around, so to speak, and called for a radio cabinet containing a loud speaker as a piece of furniture, sufficient size and room was available to use a larger cone so that the present-day dynamic has been designed. Most all companies use cones as I said before varying from 8 to 12 inches in diameter because sufficient space was allowed within the cabinet and improved quality reproduction resulted.

I spoke of the difficulty of keeping the resonant period out of the intended useful range in the case of the small cones. I will state more fully why it was difficult.

The small cone structure has, due to its size, a definite mass and a mass of associated air and together with the motor determines the total effective mass of the system; elasticity of support is such that within

practical limits the fundamental period of the device could not be reduced low enough to remove it from the range where it was most troublesome, that is, of 350 cycles per second. The period could have been lowered had it been feasible to sacrifice efficiency. This could have been done by increasing the mass of the structure but response would have been so lessened that the device would not have been commercial.

The elasticity of the entire system involves the elasticity of the rim itself. It is a definite factor and many manufacturers actually stretch the rim, either leather or cloth, to give uniformity to it so that reproduction could be controlled.

I do not agree with Dr. Miller that in the past years there has not been a progressive improvement in the range and also in the balance of the sounds that have been produced by these loud speakers. There has been a very definite improvement in the range and balance of sounds in the past few years. There has been an increase in the power available to drive them and the power available to drive them has increased a great deal. I imagine actually they are used at about the same intensities as they were used heretofore.

A cone speaker which existed we will say in 1913 for use on phonograph records would not be required to cover so broad a range of frequencies as the present-day devices, because the records of those days did not have the lower tones as pronounced as they now have. The most rigid requirement for reproduction is radio broadcasting of today where the tones transmitted are actually as low as 50 cycles. The present-day record is deficient in frequency between 50 and 100 cycles so that the requirements of the record reproduction are not as severe as the radio reproduction.

I have pictured how the flexibility of the rim comes into this design. I will now tell you what would have been the situation if you had no rim at all and clamped

the supporting frame or rings directly on the basal edge of the cone. If the supporting ring were clamped directly to the basal diameter of the cone on its periphery, the device would be so stiff that motion in an axial direction would be limited. This would limit the response and decrease its efficiency and raise its fundamental pitch of the sounds as reproduced, which would be much less in intensity; you would probably get some muffling in the vocal range. When I speak of raising the fundamental pitch I mean the natural resonant period of the diaphragm structure as a whole.

The conclusion from what I say is, that with a cone rigidly supported at its basal edge, the fundamental pitch would be brought up within the intended range of the cone itself, it would be much higher.

With no restraint on the edge of the cone at all, you would expect to have such a freedom that increased efficiency would result but practically the edge would lack support and the periphery of the conical portion would deform much in the same manner as a bell deforms when hit with a blow at its periphery.

This deforming vibration, a sort of a parasitic vibration, builds up and gives rise to paper rattle or blasting.

Furthermore, without the rim the sound wave, tended to be produced on one side, would circulate to the opposite side and reduce efficiency and the lower tones would not result and thirdly the lack of support of the edge of the periphery by the rim would make it a very difficult matter to keep the coil centered in the annular gap and prevent rubbing.

In dynamic speakers of this type this is a very important feature so to make the structure as small it is now and they are not particularly small and cheap, it is necessary that the clearance around the copper coil be extremely small so that the total gap through which the magnetic flux must be forced is small.

A clearance of the order of 10/1000 of an inch is ordinarily used inside of the coil and outside and if the outer edge of the cone is not supported the weight of the cone itself will so shift the coil that it will rub.

I have prepared a cone, associated it with one of the defendant's drives, made the cone of the same size as the defendant's cone and supported the cone with a paper rim instead of a cloth rim. I have it here in court.

I can demonstrate first the action of the cone with the paper rim as compared with the action of the cone with the cloth rim and then demonstrate this movement of the edge of the free cone about which you have spoken.

I have constructed a conical diaphragm with the same basal diameter approximately as the defendant's structure with a plane peripheral rim of paper. The altitude of the cone is somewhat less, more nearly one-fourth of the basal diameter. This has been mounted on a Fada dynamic motor and supporting frame.

MR. DAVIS: I offer that in evidence as Plaintiff's Exhibit 31.

(Received in evidence and marked "Plaintiff's Exhibit No. 31.")

THE WITNESS: I will compare that with the defendant's device of the larger of the two sizes.

MR. DAVIS: Let that be marked for identification.

(The same was marked "Plaintiff's Exhibit 0 for Identification.")

THE WITNESS: I have chosen this defendant's device instead of Plaintiff's Exhibit 4, because the latter did not operate as well as this one. I believe its

efficiency has been somewhat lessened by the fact that it has been taken apart and put together. This device, Exhibit O for identification, seems to operate satisfactory with a good degree of efficiency.

Both speakers are operated on a usual type amplifier supplied by a photograph record in conjunction with an electro-magnetic pick-up. The input to the two speakers will be the same in both cases. I will now play the Plaintiff's Exhibit No. 31 and now Plaintiff's Exhibit O for identification. (Demonstration.)

Playing the defendant's structure marked O in comparison with the Plaintiff's Exhibit 31, my impressions were that the volume and quality of sound were very similar. If there were any differences noted it was that the Exhibit 31, having a paper rim, gave slightly improved results. My only explanation for this is that the quality of paper was slightly different. It was a form of drawing paper readily procurable on the market, expensive and not used for commercial construction.

I have here a Fada speaker, that is, a speaker of the manufacture of the F. A. D. Andrea Company bought on the open market and having a leather supporting rim.

I have here a Fada speaker with a large-sized conical diaphragm, mounted with a plane peripheral rim of leather instead of cloth.

MR. DAVIS: It is stipulated, if the Court please, that this was bought two days ago in New York in the open market, and this is a product of the Fada Company.

MR. DARBY: But it is not before this Court under the charge of infringement.

MR. DAVIS: No, it is not.

THE COURT: The only thing this jurisdiction has is the cloth?

MR. DAVIS: Yes.

MR. DARBY: I assume, therefore, to avoid the objection of its being immaterial to any issue before this Court, I assume that the demonstration will show the baffle effect of the leather, or what the effect of the leather is as a rim.

MR. DAVIS: It will compare the cone with the leather and with the paper rim on one hand and the cloth on the other.

THE COURT: May I assume one step further, and that it is to show really what the function of the cloth rim is, and how the cloth rim operates in the alleged infringing device?

MR. DAVIS: Yes.

THE WITNESS: I will now demonstrate the device with the leather rim, comparing it with the device of the cloth rim (demonstration).

MR. DAVIS: I offer in evidence the device with the leather rim as Plaintiff's Exhibit No. 32.

(Received in evidence and marked "Plaintiff's Exhibit No. 32.")

THE COURT: Does the table act as a sounding board here at all or is the quality of what I hear the result of the exhibit itself?

THE WITNESS: I do not believe the table is affecting the quality very much.

The acoustical properties in the room are probably making some difference. I do not know how it sounds where your Honor is sitting. It is quite a long distance to there.

MR. DARBY: I assume that in any event th being a comparison test that the comparison fair.

THE COURT: That the comparison is fair, ye

(Further demonstration.)

THE WITNESS: I will play defendant's structur Exhibit O for Identification first. (Demonstration I will now compare it with Plaintiff's Exhibit No. 3 (Demonstration.) The comparison of defendant's d vice marked O is identical, with Plaintiff's Exhibit N 32, which indicates to me that the volume and quali of sound are approximately the same. If any diffe ences were noted, it was in favor of the device with t cloth rim.

THE COURT: Would you mind before goi further—Mr. Darby and Mr. Davis, will you co up here with me on the bench, so that we can he the same thing.

(Mr. Darby and Mr. Davis sat by the Court

Q. 47. Mr. Ferrand, will you lift those things while you are putting this on, or take that box awa

A. Yes. (Demonstration.)

Q. 48. Now, Mr. Ferrand, if you will substitu the cone with the paper on Plaintiff's Exhibit No. for Exhibit No. 32.

MR. DAVIS: Will you have that other one tak off the table.

A. Yes. (Demonstration.)

Q. 49. I would like to have Mr. Ferrand say wh he heard.

A. The comparison just made was first a co parison between defendant's device marked O wi the cloth rim, and the Plaintiff's Exhibit 32, with t

leather rim. We were listening at a distance of approximately thirty feet. The device with the cloth rim had more volume than the device with the leather rim. The next comparison was between the device with the cloth rim and Plaintiff's Exhibit 31 with the paper rim. The device with the paper rim appeared to have more volume than the device with the cloth rim.

Q. 50. Mr. Farrand, will you just for a moment have these devices, any one of them or any two of them, driven at a greater volume just to give some idea of what volume it will stand without blasting. But make it short if you will, because it is not very pleasant.

A. (Demonstration.)

Q. 51. Now, put that on the leather rim for a minute, the same volume.

A. (Demonstration.)

Q. 52. Would you mind making the same comparison with the paper one?

A. (Demonstration.)

MR. DARBY: Does your Honor hear the rattling in the last one? I do not want to be presumptuous while you are conducting the test, Mr. Davis.

MR. DAVIS: Go ahead.

MR. DARBY: I would like while we have the paper and the standard Fada, I would like to have the Court hear the sound of those two so that we will not have to reproduce the experiment at another time.

By MR. DAVIS:

Q. 53. Now, Mr. Farrand, will you please take the defendant's device marked for identification——

THE COURT: May Mr. Darby tell you what the purpose of hearing at a closer distance was?

MR. DARBY: Yes. I heard a hissing sound quite comparable to a needle scratch in the standard Fada which I did not hear in the paper rim structure and I intend to ask Mr. Farrand something in cross-examination about that subject unless you want to do so first.

By MR. DAVIS:

Q. 54. Did you hear it, Mr. Farrand?

A. No. I would like to try it again and get that out. I did hear a slight rattle in the white paper model at the extremely loud volume, and if you will observe the structure itself you will see that in making it out of the Fada device that the leg supports touch the cone in spots when it moves to an extreme excursion and this rattle can be stopped by depressing the paper there and keeping it away from the leg supports. I would like to listen to the needle scratch that Mr. Darby speaks of. (Demonstration.)

Q. 55. Did you hear that noise that Mr. Darby refers to?

A. It seemed that the Fada speaker with the cloth rim was slightly more efficient in extremely high frequencies than the exhibit with the paper rim. I would assume that this is due to the difference in texture of the paper.

Q. 56. And the increased audibility of the sibilant sounds that Mr. Darby was referring to is due to the higher efficiency at high frequencies, is that right?

A. That is correct.

Q. 57. That is, these sibilant sounds of the human voice and of the needle scratch are of very high frequencies?

A. Yes, above 3500 cycles.

By THE COURT:

Q. 58. Which was the more efficient, did you say?

A. The Fada structure with the cloth rim, that

was more efficient at the higher frequencies above 3500 cycles.

MR. DAVIS: We all heard the same thing.

MR. DARBY: That is what I had in mind. My understanding was that that was a greater efficiency at that frequency.

THE WITNESS: I want to demonstrate in a visible way the movement of the Fada cone as it vibrates in response to the music from the phonograph and also to demonstrate the weaving and other movements of a Fada cone without any rim when subjected to the same music and in order to make the demonstration clear I may say these movements are not easily visible to the eye.

The movements of the cone while at the lower frequencies are extremely large, that is, in some cases plus or minus one-sixteenth of an inch, but they are not easily visible to the eye. I might explain that at the higher frequencies the motions are much smaller and at 5000 cycles may be less than one-thousandth of an inch.

At 100 or 50 cycles the motions will be as large as one-sixteenth of an inch.

Those frequencies are not visible because they are too rapid and in order to view them distinctly and see what the phenomenon is, a stroboscope light is often used and I will demonstrate this in court.

The stroboscope light consists of a source of powerful light from a lamp, a revolving shutter which is made in the form of a disc with a hole revolved by a motor at high speed, giving a periodic illumination to the device from the light beam.

The periodicity of this illumination is made nearly that of the period of vibration of the device, so that the apparent motion is a difference of these two peri-

odicities. When they are made the same the device appears to stand still, and when the period of the light differs by, we will say, one per second, from the period of vibration of the device, the device will appear to move with one vibration per second. Where I said the device is standing still, I meant it appears to be standing still. With that explanation, I will proceed with the demonstration.

In this test a beat oscillator is substituted for the record and electromagnetic pick-up to supply a pure tone of constant frequency so that the action of the device producing a simple note can be observed. I think your Honor should view them closer. (Demonstration.) This is a simple pure note.

I have here a Fada loud speaker of the smaller size from which I have removed the cloth rim and the supporting frame, leaving the cone mounted directly on the coil support.

MR. DAVIS: May that be marked for identification.

(The same was marked "Plaintiff's Exhibit P for Identification.")

I will operate this at a frequency of approximately 120 cycles per second (demonstration). It will be noticed that at certain frequencies, many frequencies within a short range or throughout the range (demonstration), the periphery of the cone being unsupported, deforms and waves are observed to exist. They are evidenced by nodes spaced around the periphery of the cone, and at this particular frequency there is approximately 16 nodes interspaced between 16 loops of motion.

This latter condition on the 120 cycles, I mention, shows 8 loops and 8 nodes, and when the same frequency and intensity is applied to Plaintiff's Exhibit

marked O for identification, with the cloth rim, the latter gives a simple, pure tone without any evidence of blasting. The free edge cone shows apparently that the paper is being stressed beyond its limit.

As to what it is that is keeping the cone in the device marked O for identification from doing the same rattling that the device marked P for identification does, the rattling in device P for identification is caused by the periphery of the cone deforming; there is nothing in that case to restrain it, whereas, in the device which has the cloth rim, it is held in circular form, preventing deformation of the periphery of the cone and the building up of this parasitic vibration.

We will now observe these two speakers under the stroboscope light (demonstration). I have adjusted the speed of the light, together with the frequency, so that they differ slightly, and the motion of the cone of the Exhibit O can be plainly seen. That motion is a bodily motion, substantially a bodily motion, due to the fact that the frequency of 120 cycles does not set up standing waves in a diaphragm of this size.

The cone in this case is moving approximately a thirty-second of an inch.

There are undoubtedly circumferential waves present in the cone, but they are so restrained that the paper is not being stressed beyond its elastic limit, and no blasting occurs in this device, as it does with the free edge cone. There you can adjust the volume on the free edge cone and you can actually see at low volume the deformation of the periphery and the building up of the circular vibrations, and finally the vibration goes up so that blasting occurs at a reasonably low volume. (End of demonstration.)

I heard Dr. Miller's statement yesterday to the effect that in his opinion a sound box was a baffle. I cannot see by what line of reasoning a sound box may be termed a baffle. The purpose of a sound box is en-

tirely different from the purpose of a baffle. The sound box encloses one side of a small diaphragm, with the exception of a small area at its center. The distance of the walls of the sound box from the diaphragm is in some cases less than one-tenth of an inch. The purpose of it is to highly compress the air in this chamber so that the high pressure wave will be applied to the throat of the horn which is placed over the small opening in the sound box. The dimensions of the sound box are extremely small. One thinking of a baffle thinks of something larger and entirely different. The purpose of a baffle, on the other hand, is to separate the action of the two sides of a diaphragm in free air, operating directly on the air to produce sound waves, and not as in the case of a sound box through a transformation device like the horn.

The baffle, as I said, separates the action of the two sides of the diaphragm allowing the waves, to form on either side, and then meet and ultimately form a wave of substantial volume.

The dimensions of the baffle to function at a given frequency should be an appreciable fraction of a wave length in air of that particular frequency. Fifty cycles is extremely low frequency, and would have a wave length of slightly more than twenty feet. The wave length of a note of 100 cycles is slightly more than ten feet, about eleven feet.

In the sound box the air is confined within the sound box and compresses and moves in a direction radially towards the center of the diaphragm, applying the motion at the base of the horn.

A baffle is a device which is applicable only when you are impressing the sound on free air.

I have spoken about the purpose of the baffle to prevent the action on one side of the diaphragm from interfering with the action on the other side. I will state that a little more fully and then demonstrate it.

The diaphragm, we will say, similar to those we have in court in conical form, when moved in an axial direction, compresses air on one side and rarefies it on the opposite side; these two actions will tend to produce independent sound waves. It is apparent that they are being formed in opposite sense, and if in their early stages of formation are permitted to mingle, will cancel each other, but if the waves are permitted to form independently, so that they have been released, so to speak, from their radiating surface, and then combine, they will combine to a resultant sound wave of appreciable amplitude. The effect of the baffle is to permit them to form and separate from the radiating surface without cancellation. The effect of the baffle is to permit them to extend further from the source and form more completely before they intermingle, the baffle being placed around the periphery of the diaphragm and extending in some cases several feet, so that the wave on one side has the opportunity of expanding several feet before it intermingles with the wave on the opposite side of the diaphragm.

As to whether or not this interference of the waves on the back and the front of the diaphragm is affected by the frequency, at the higher frequencies, the dimension of the diaphragm itself generally serves sufficiently to prevent intermingling of those two waves, and in that way act as a baffle. As the frequency is lowered, the wave lengths become longer, and the need of a baffle arises. At low frequencies of the order of 100 cycles, that is, an 11-foot wave of air with a diaphragm, 1 foot in diameter, or 9 inches in diameter, it is greatly influenced by the addition of the baffle; that is, the intensity of the sound of frequency may be increased as much as 50 per cent.

I can demonstrate this effect of cancellation of the waves with the small diaphragm. I have a small diaphragm, 2½ inches in diameter, basal diameter of the

cone. It is mounted on a standard Peerless unit motor and I will demonstrate it.

MR. DAVIS: I offer in evidence the device produced by the witness as Plaintiff's Exhibit No. 33.

(Received in evidence and marked "Plaintiff's Exhibit No. 33.")

THE WITNESS: Will you put on the same record that we used in another test, the same intensity as we have, marked with the pencil mark? (Demonstration.)

This device, Plaintiff's Exhibit 33, was operated from a phonograph record at the same intensity; that is the same amount of power from the amplifier from a phonograph record as has been used in the previous comparison. The response is not nearly as strong. It is particularly deficient in the lower tones. The deficiency in response is probably due somewhat to the motor being slightly less efficient than the dynamic motor of the Fada structure, but this motor is quite efficient throughout its range. The deficiency in the lower tones is obviously due to the size of the diaphragm itself. I said it is obviously due to the size of the diaphragm. I will explain that a little bit and tell what it is that caused the low tones to be lacking in that demonstration.

The device reproduces the higher tones which you can practically hear, the lower tones neutralizing themselves, that is, they just do not form. The diaphragm of that size producing a lower tone of one or two hundred cycles does not get a chance to form the sound wave because the opposite side of the diaphragm is doing just as much work in the opposite direction as the front side.

By The Court:

Q. 84. I miss why that is not true of all notes at all wave lengths.

A. The higher frequencies, a frequency of 5000 cycles per second, the wave length is so short—the wave length at 5000 cycles per second is one-fifth of a foot. The exact ratio is the velocity of sound divided by the frequency, the velocity of sound being 1120 feet per second divided by 5000, and if my mathematics are correct, it is approximately one-fifth of a foot or two and a half inches.

The circulation occurs at slightly less than half a wave length, so that as your baffle approaches one-quarter wave length it becomes very effective. That means that a diaphragm of an inch or so in diameter at 5000 cycles is quite effectively baffled.

Mr. Darby: Mr. Davis and I have discussed the possibility of avoiding repeating some of these experiments at a later time and I can ask one or two questions at the time the experiment was made.

Cross-Examination.

As you increase the size of this baffle without varying the size of the cone you would get more efficient results with respect to the low wave lengths. The baffle would help the lower tone.

The exact diameter of the cone is two and a half inches. It has a supporting rim of soft leather about one inch in radial width. The baffle extends beyond the edge of the leather, about one-quarter of an inch. I would not call that a baffle, however. That was a ring support to hold the leather.

XQ. 91. Will you please operate that device at the power that you had on it during the demonstration and gradually increase the power?

A. (Demonstration.)

THE WITNESS: If you increase the driving power your volume increases, but the quality does not change. However, the device of this character is so inefficient that it is not what I would consider from my experience in loud speakers, and designing them to be a commercial structure, due to the fact that you lose the low tones as I have demonstrated, as well as due to the low efficiency of the device so that it could not compete with other structures, the manufacturer could not, selling a device as inefficient as this.

Inefficient in respect to the production of sound.

Its inefficiency lies in its lack of volume. The device itself does not have the volume that commercial models on the market have at the same input.

With the driving power available for a radio loud speaker, you can increase the volume within limits.

Merely increasing the volume would not change the quality up to a certain point. Carrying the volume still further the device rattles.

If you increase the volume and the quality remains the same and the volume has not been increased to the point where it rattles, the inefficiency of the device is in itself the lessened response at all frequencies and particularly at the lower frequencies.

The reason that it does not properly respond to low frequencies, that is, its effect on your ear, is partly caused by the long wave lengths of the low frequencies mainly on the front and the back of the device.

It is also caused by the size of the diaphragm itself, not being an efficient radiator of any frequencies excepting extremely high frequencies in the neighborhood of four or five thousand cycles.

The particular difficulty of these particular long wave lengths, the difficulty of the intermingling on the front and rear side of the diaphragm can be overcome by a baffle.

The small diaphragm cannot be made to produce the lower tones with the efficiency of a larger diaphragm.

In a radio reproducing device the diaphragm can only reproduce sounds which have been transmitted or transformed from the air by a relatively small microphone.

DIRECT EXAMINATION (Resumed).

Mr. Darby asked me about the power available in modern radio. I used the word "but" and then he interrupted me. I have something to say about that.

The thought I had in mind was that while there is practically unlimited power available on the modern radio receiving set, the efficiency of the loud speaker is a very important item because it affects the ultimate operation of the receiver as the response on the inefficient loud speaker is much less than on the efficient loud speaker and it is not an easy item to sell. The dealers themselves make competitive demonstrations and an inefficient loud speaker is a very difficult item to sell.

I saw these sand patterns which were put in evidence yesterday.

In the demonstration under the stroboscope I testified that there appeared on the Fada cone these radial nodes evidencing the existence of circumferential waves.

When these Fada cones are used or any paper cone of that type is used for the reproduction of music or the voice, when the device is operated at a high frequency, the radial waves set up circular nodes. As the frequency is lowered the circular nodes finally disappear. I can best explain this by referring to a chart I have.

The chart Fig. 1 represents the waves in a cone diaphragm. Assuming the velocity of propagation in

the cone of 200 feet per second, which is of the order of propagation in cone structures, and I determined this by actual experiment, I have drawn a wave of fifty cycles which is a long flat wave. In the same scale I have drawn waves at 5000 cycles.

The conical structure is represented with the vibration applied in an axial direction. The outline or contour of the cone itself is shown and it will assume a shape at fifty cycles which is practically a straight line, and the cone will appear to move at fifty cycles practically as a plunger. This is due to the fact that the dimensions of the cone are a relatively small fraction of a wave length at fifty cycles.

At the other extreme of 5000 cycles, there will, however, be many waves set up in the cone structure itself.

At frequencies between these two values, one or more or finally many waves will appear as the frequency is increased.

I will go on and discuss the waves that I referred to yesterday as parasitic waves, that is, the waves that produce radial nodes.

The waves shown in Fig. 1 are what are termed the useful wave, that is, the one most active in the production of sound and due to the vibration applied to the cone in an axial direction.

The ideal conical reproducer will be one that maintained practically plunger action at all frequencies even up to 5000 cycles. Of course, this is not feasible, the stiffness cannot be secured at reasonable mass and even probably at any mass. So that a compromise has to be resorted to.

On this second chart which is entitled Chladni figures, I have attempted to represent the actions which occur in the formation of sand patterns. These have been discussed in text books and they were described in great detail by Chladni. The left-hand column

shows a flat plate with the vibration applied in an axial direction, the upper figure being a plan view and the lower figure being a cross section. The wave progresses radially outward and is reflected from the edge, the wave progressing outwardly I have shown in a solid line and the wave reflected from the edge I have shown in a dotted line.

The wave progresses radially outward reflected at the edge, progresses radially inward, giving rise to standing waves which are evidenced by circular nodes interspaced between circular loops of motion.

The second figure is the second type of vibration of the two that a flat plate can undergo. If the plate struck at the edge or bowed with a violin bow, instead of applying the vibration axially as in Fig. 2-A, the plate will indicate the vibration shown in Fig. 2-B, that is, the vibration initiated at one side of the disc will travel in opposite directions around the disc, meet at the opposite side, and overlap and produce nodes on radial lines. These are interspaced between sector loops of motion.

Supposing that the vibration is applied at the center in Fig. 2-B, you cannot really separate these two actions in a flat plate because the material itself is not exactly uniform. It is what is termed non-isotropic.

There is always a tendency when the vibration is applied in an axial direction at the center of the disc for there to be a component of force creating a wave at the periphery much in the same manner as if the forces were applied there. That is due to the fact that the wave does not reach the edge simultaneously at all points.

You always get in a flat plate, unless extreme laboratory care is used, the two modes of vibration forming a composite of a useful and parasitic wave and

these are evidenced by a pattern consisting of circular nodes in combination with radial nodes.

In Fig. 3-A I have shown the modes of vibration of a free edge cone. These are very similar to the modes of vibration of a flat plate, the principal difference being that in giving the plate conical form its stiffness has been increased greatly without largely increasing mass.

This is a cone of the so-called Starling & Cole type. The vibration applied axially at the center travels radially outward to the edge as reflected and travels as shown by the dotted line radially inward, giving rise to circular nodes interspaced between circular loops of motion.

Fig. 3-B shows the parasitic wave which is of the same nature as the vibration of a bell. A bell when struck at its periphery undergoes a deformation, the simplest form of which is when the bell assumes a form of an elipse, we will say, with a horizontal major axis and then goes to the form of the elipse with a vertical major axis. That gives four radial nodes and is the fundamental of the bell. The particular view here is the first overtone, that is, the double frequency of the bell.

The fundamental of a bell is the lowest note to which the bell responds and is that note which gives rise to four radial nodes.

It is that note and the overtones of that note that the bell emits whenever it is struck no matter what you strike it with.

A bell always responds in that note with its overtone and depending on how it is struck the relative intensity of the fundamental pitch and the overtones vary in proportion.

The free edge cone in Fig. 3-B, the parasitic wave is very similar to that of the bell. This shows the

parasitic wave propagating circumferentially around the cone in opposite directions, overlapping, creating standing waves evidenced by radial nodes, in this figure there being eight radial nodes.

In Fig. 3-C are shown the composite of the useful and parasitic wave. If a simple paper cone is vibrated in axial direction at low volume and if it can be made of perfectly uniform material, you will get the formation of circular nodes as in Fig. 3-A. This is not possible. The parasitic wave always exists due to the non-uniformity of the material and tends to build up in amplitude. The phenomenon is of a resonant nature much in the same manner as a bell may be considered a resonant device. And at or near these resonant frequencies of the fundamental of the free edge cone, or its harmonics or overtones, the amplitude of this parasitic wave in the paper builds up to such a large extent that it stresses the paper beyond its elastic limit and the paper rattling occurs.

This is due to many factors. The thing is a resonant phenomenon and there is little restraint in the stiffness of the material in this direction to this wave propagated circumferentially, and also the resistance of the air is small, because it tends to circulate locally between a loop of positive sign, and a loop of negative sign; that is, when one sector is feeling their contents, the local section of air, it does not resist this building up of the parasitic wave; so that we have the composite of these two waves with circular and radial nodes.

In Figure 4-A, I have attempted to show what happens when a Starling & Cole cone is held by a plain peripheral rim in a ring support. I have lettered the figure the same as lettered in the Hopkins patent. The ideal condition is shown in Figure 4-A, where we have only the circular nodes. The action is the same as in

the previous figure. The vibration is applied axially; the wave is propagated radially outward to the edge as shown in the solid line, reflected at its periphery travels inwardly, as shown in the dotted line and makes waves with circular nodes. The device, however, tends to undergo the same mode of vibration, as a free edge cone, that is, the parasitic waves tend to build up because of the non-uniformity of the structure itself. The rim, however, greatly restricts the amplitude of this wave and prevents the deformation of the periphery of the cone, but does not eliminate this parasitic wave entirely, however, so that radial nodal lines will always be apparent.

So that we have in the actual device itself a tendency to produce nodal patterns similar to those shown in Figure 4-C, which are the result of the useful wave applied axially on the cone and the parasitic wave building up and traversing the cone in the circumferential direction, the useful wave producing the circular nodes, the parasitic wave producing the radial nodes. The exact number of nodal lines shown depends upon the frequency. At the higher frequencies there will be more radial nodes and more circular nodes. At lower frequencies the circular nodes may ultimately disappear, due to the fact that the cone itself is a small fraction of the wave length, as I have shown in Figure 1.

They may be said to be chased off the cone by the lengthening of the wave length.

CROSS-EXAMINATION BY MR. DARBY:

I will state concisely what conclusion I draw from that I have illustrated on the chart labeled Chladni figures; that is, what conclusion I draw that is pertinent to the issues of this case.

The conclusions I draw from this chart are that they show the effect of adding the plane peripheral

rim to a conical diaphragm restricting the parasitic wave to such a degree that the cone may be properly loaded with a useful vibration.

All of the facts that I have testified to as illustrated by the Chladni figures were not taught by Chladni, were they not?

The Chladni figures are the figures formed by sand or other granules on diaphragms, and this method is often used to analyze the motions of diaphragms, and as I have used this method in analyzing the motions of cones, I have termed these "Chaldni figures" and they show various modes of vibration of three structures; that is a flat plate, a free edge cone, and the Hopkins cone.

The radial wave is essential to the reproduction of the sounds of an orchestra. The circular node is incidental to this.

The radial node, or at least the waves incident to the formation of radial nodes, are not essential. They are not only not essential, they are detrimental.

The ideal speaker though never yet attained, would be one which would completely preclude the setting up of waves incidental to radial nodes.

The ideal speaker would preclude the circumferential waves which set up the radial nodes.

In Defendant's Exhibit No. 32, which is a sand pattern taken at 400 cycles per second, these radial nodes are quite pronounced, indicating that waves incident to radial nodes occur.

I might explain that they are always evidences in conical structures of this type, and cannot be entirely eliminated. Various methods have been used to suppress them, one of which is to corrugate the cone circularly with concentric corrugations which give it a stiffness, and tend to suppress that; that is best evidenced in the Radiola 106 which we have here.

In defendant's structure, the waves incident to radial nodes at 800 cycles per second, are likewise quite pronounced.

In this case we have evidence of the radial nodes pronounced, and also circular nodes. That is shown on Defendant's Exhibit No. 33.

The same is true with respect to Defendant's Exhibit No. 34, being the sand pattern at 1200 cycles per second. The same is true on Defendant's Exhibit No. 35, 1600 cycles per second. This is slightly less pronounced.

The same is true on Defendant's Exhibit No. 36, 3200 cycles per second. This shows the radial and circumferential nodes in a pattern which is not extremely uniform, but they appear to be about equal in intensity.

From my experience with cones and sand patterns of cones which show the figures, I do not question the accuracy of what these sand patterns illustrate in the defendant's device.

I would expect to get figures of that sort with that cone structure.

In sound reproduction in a radio loud speaker, I consider the essential frequency to be from 50 to 5000.

No cone would be of any practical utility if they did not use frequencies between 400 and 3200.

If you move a paper cone or any part of it at a sound frequency, it will create a sound wave; that is right. The particular area moved will create a sound wave. It, however, may be completely neutralized by an adjacent area moving in an opposite direction, so that while one area may be producing a sound wave, the sum of several areas may not be producing any sound whatsoever.

That is not true whether or not the wave is circumferential or whether or not it is radial.

I will explain why not. It is a little involved. The wave in a cone as initiated by the vibration applied in an axial direction and the area near the source, that is nearest the apex, is principally active in producing the sound wave. At the higher frequencies, this area is very small. At 5000 cycles it may only be an inch in diameter. As the frequency is decreased, this area becomes larger and larger until at the lower frequencies of 50 to 100 cycles it encompasses the entire cone structure itself.

Now, the area of the cone nearest its source is most active, as the waves in the air are still coupled with the generating impulse, and it is due to this particular area that the major production of the sound occurs. As the wave progresses from there on, it is an uncoupled wave; it has been released, so to speak, from the radiating surface; so that when we consider in a cone structure of this sort, I believe that the first wave in the cone nearest the apex, I mean to the wave, the one traveling outward, is principally responsible for the production of sound, and is not easily neutralized by a concentric ring, still further outmoving in the opposite direction.

However, the parasitic wave which builds up and traverses the cone in a circumferential direction is an induced wave, so to speak, and builds up slowly. It is not coupled tightly to a source of power, and the impulse generated by the various areas of paper sectors, so to speak, may more nearly neutralize each other than the circular annular areas.

Any particular frequency within the audible range has a characteristic note, a simple tone.

Taking in the desired size of diaphragm what determines the volume of sound given off by that diaphragm is the amplitude of the axial motion at the apex of the conical diaphragm.

In the electrical actuating device, such as used in radio, the amplitude increases as the frequency is lowered, for the same output of sound.

When I put 120 cycles on the cone of the Fada standard construction at a fixed volume, a fixed volume of sound, keeping the amplitude of motion of the cone the same and changing the frequency, the volume increases as the frequency is increased, and decreases as the frequency is decreased.

If you change the tone characteristic at 120 cycles, to the tone characteristic of a thousand cycles, you would expect a much greater volume. It would be very difficult, with the apparatus available, to get the same amplitude of motion at ten times the frequency.

That is due to the fact that at higher frequency an enormously greater power would be required to produce the same amplitude of vibration as you could secure at the lower frequency.

I have experimented in this field over a period of many years. My work on loud speakers started more than ten years ago.

The testimony that I gave yesterday was of course based on experiments and work that I have personally conducted.

I am a substantial stockholder in the Lektophone Corporation.

I did not take any active part in the organization of the Lektophone Corporation.

I am a member of the board of directors at the present time, but not in the first year of its incorporation. Pardon me, Mr. Darby, I believe the corporate structure was changed, but when the corporation was incorporated I had no part in it and was not a member of the board.

This is not the first year I have been on the board. I have been for several years.

The term is yearly and this is not the first year. I have been serving in that capacity about three years. I have testified on behalf of the Lektophone Corporation in numerous of its previous suits on the Hopkins patent.

Yesterday I mentioned the fact that there had been enormous improvements in power and range in radio reception and similar improvements have been made in radio transmission during the period of years from 1918 down to the present day.

I am asked what effect the angle of the cone or its altitude has on its operation.

The angle or altitude of the cone affects somewhat the balance of the speaker, that is, the proportion of high frequencies to low frequencies and is involved with the texture, stiffness, and the paper itself, and all the other associated items that go into the design including the stiffness of the rim, stiffness of other supports, mass of the motor parts, and all of these things have to be considered in the design of a speaker to blend them in about the type of reproducer you want to secure.

I agree that the angle of the cone plays an important part on the question of balance, excepting that it is not critical. It may be varied a great deal. Some designs include an angle in the cone of the concave side of the cone of 120 degrees and other designs it is 90 degrees. It is necessary to change it somewhat as the basal diameter of the cone is changed to get the best results from that given basal diameter. It is a matter of cut and try of what you are after.

There is no way of predicting exactly the thing. You get it by experience and then you can from past experience predict fairly well what you may expect to get with a given diameter cone. It is a very difficult thing. I have considered myself fortunate to be able to predict one or two items in the last ten years. I

would not attempt to do it regularly. That is based on my own personal experiments.

The angle of the cone has this effect, referring to my chart and the middle column, the angle of the cone with the vibrations imparted directly to the apex and axially of the cone has a great bearing on the rigidity of the cone or at least the over-all rigidity of the cone to the vibration. You desire stiffness in that direction, everything else being equal.

The effect of the stiffness on the operation is that it permits a larger area of air to be moved by the diaphragm. For instance, the flat plate shown on Fig. 2-A, I have shown these waves to the same scale as Fig. 3-A, but actually the plate of the same mass would not be nearly as stiff as the cone in Fig. 3-A, and the waves are much closer together and you could not impart the vibration with nearly as large an area or volume of air as you can when you increase the stiffness by giving it its conical shape.

If my theory is correct that the closest approximation to actual bodily movement is the most desirable, the stiffer the cone is the better it would be, providing you can secure the stiffness without adding to mass. That of course is a difficult thing and has to be compromised. One way of doing that with the qualifications of the compromise that I brought out, one way of increasing the stiffness within limitation is by making the altitude of the cone greater, within certain limits. There is probably a best angle for a given paper and a given amount of power. What that is I hesitate to say.

As to why in Plaintiff's Exhibit 31 I used a cone with a substantially less altitude than the cone of the Fada structure marked Plaintiff's Exhibit O for identification. The reason the cone with the less altitude was used in building the structure with the paper rim was that I was asked to build a device more nearly like

that disclosed in the Hopkins patent, but found I was not able to do so with the Fada structure, even though I had modified it somewhat, and so I had to sort of fit together, which resulted in a cone of about those dimensions.

I had not measured and I cannot tell the exact altitude of the cone, but I would say that it is less than the Fada structure and more than one-fourth of the base or basal diameter of the cone. It is perceptibly less in altitude than the Fada structure.

As to why I used a different kind of paper from the paper of the Fada structure, that device was built in Wilmington and that is the only paper we could procure in the city. As a matter of fact, however, I called up someone at the Fada factory in New York and told them that I wanted to build some structures for a demonstration or experimental purpose and asked them if they would give me some paper. Mr. D. Andrea said he would, but he could not supply it in sheets, but only cut to size for the building of the Fada cone itself, and as I wanted to build a complete cone and not necessarily the same size as the Fada, I was not able to use it. This was a day before I left for the trial and was forced to build the structure down there.

I believe Mr. Andrea is president of the Fada Company.

In this structure, Plaintiff's Exhibit 31, when an abnormal power was used you heard the paper rattling. Of course, all these cones blast, even the defendant's structure, but the one with the paper rim gave forth extraneous sounds first and that is due to the paper rim actually touching the leg support as it moves. I did hear a typical blast after you passed that point. I heard it in both devices. If you put enough power on any diaphragm type of loud speaker you can make it blast, because they are designed to carry a definite volume suitable for household reproduction and it is not

good economics to build them to carry an enormous volume.

The only real problem that blasting presents is that you do not want blasting to occur in the operation of the cone at the volume that you ordinarily use to reproduce sounds to the ear in home use and also at a larger volume. We have a practical consideration nowadays of designing speakers so that they will reproduce sufficient volume for dealer demonstrations, and this volume is many times greater than is used in the household reception.

Sibilant sounds of speech are necessary for proper reproduction. If they are omitted, the loss of sibilants gives a lisping characteristic to the speech which is not faithful reproduction. Sibilant sounds come roughly between 3000 and 6000 cycles. A good reproducer, a good radio loud speaker must be able to reproduce those frequencies faithfully.

You state that I pointed out that the illustration of Fig. 4-A would be the ideal condition in my opinion. If I did, I might say now that it is not quite the ideal, because there is the still further ideal to have the device move as a plunger entirely. This Fig. 4-A shows the existence of circular nodes.

As a matter of fact, however, in actual practice the cones employed as radio loud speakers do not even come up to the illustration of Fig. 4-A. That is a portrayal of one mode of vibration of the Hopkins cone. The Hopkins cone operates that way partly. That is one of its modes of vibration.

The chart does not entirely portray the operation of what I call the Hopkins cone. Fig. 4-C outlines both modes of vibration and theoretically portrays the operation at one particular frequency.

I know of no commercial structure built like the cone diaphragm illustrated only in the drawings of the Hopkins patent.

I refer to my having marketed a cone structure which is oval in shape and which had a circumferential corrugation.

I might add a little bit to my previous answer, Mr. Darby, in order to make the matter perfectly clear. I also recall the Radio Corporation marketing a device with a cone practically identical with the figure of the Hopkins patent excepting that that cone did have in the cone itself some circular corrugations. The type number of that Radio Corporation model was 100-A. The cone 100-A of the Radio Corporation had a castellated edge. I described that yesterday. That is, in order to form it, in forming your cone out of one piece, the edge tends to stretch and a steaming operation is required and it is a simple matter to castellate the edge of the paper so as to have a periphery portion having minute slits in it. The cone of the Radio Corporation 100-A was slightly under nine inches in diameter.

As to whether or not I know of any commercial loud speaker put out by anyone with a diameter of nine inches or more that was made exactly like the cone illustrated in the drawing of the Hopkins patent in suit. I would say that the 100-A is the nearest one to what you are describing, and the diameter of the entire tympanum or diaphragm itself was, my recollection is, a little less than nine inches in diameter. That is my recollection. The overall diameter inside of the ring is very close to nine inches.

The Radio Corporation is still making a model which is very close to the 100-A. I do not know the new type number but practically that. I believe practically the same structure. As a matter of fact, my recollection is that the cone structure of this 106 that we have here is the same cone structure that they are now making as the 100-A or its successor. They have since changed to leather at the edge.

XQ. 203. And this cone structure is corrugated right throughout?

A. Yes.

MR. DAVIS: Referring to the Radiola 106?

THE WITNESS: Yes. The cone structure is corrugated with circular corrugations throughout. My recollection is that the 100-A had those same corrugations?

In that respect it was different from the structure shown in the Hopkins patent. The effect of those corrugations is that they tend to stiffen the device and tend to suppress that portion of the parasitic wave which remains in the cone itself. The rim largely restrains them and the circular corrugations restrain them still further.

My best recollection is that the diaphragm of the Radio Corporation of 100-A plus the rim was nearly nine inches. I believe it was slightly under nine inches. I testified to that before in some other suit, but I do not recall the exact figure.

With the exception then of the Radio 100-A type, about which there is some indecision as to the exact over-all size, I do not know of any commercial loud speaker of nine inches or more over-all diameter of the cone and rim that was marketed employing a cone exactly as that shown in the Hopkins drawing of the patent in suit.

With reference to a corrugation at the annular rim in a structure that I put out myself, that was not the first type of loud speaker that I manufactured. The first type of loud speaker I manufactured myself used the diaphragm about 12 inches in diameter and had one corrugation at its edge. That was marketed in 1921, the larger size I just referred to, that is the elliptical shape, was marketed in 1926.

I did not testify in the suit of Lektophone against the Western Electric Company. Prior to the com-

mencement of that suit I wrote an article for one of the radio magazines on loud speakers. It was a paper which was delivered before the Radio Club of America on cone loud speakers. That was before I was familiar with what evidence had been put in in the Western Electric suit. It was published in the *Radio Broadcast*, a radio magazine. This paper illustrates both photographically and diagrammatically the structure of the cone which I have referred to as having made and marketed.

XQ. 224. And will you kindly point out the corrugation in the peripheral edge that you referred to?

A. The peripheral edge is the extension of the cone proper in the form of a semi-circular gutter beyond which extends the flat portion clamped in the rings.

In other cases that I have testified in for the Lektophone Corporation I have not been questioned about this paper of mine in the *Radio Broadcast*.

I stated in this paper:

> "In the development of the telephone it became evident that it would be desirous to have the surface of the diaphragm move integrally from its center to its edge, so a diaphragm of conical shape was resorted to.
>
> "The conical shape gives extreme rigidity to axial motion and provides a surface which moves as a plunger, and which is of small weight. Cone diaphragms were used in telephones and were sometimes used in connection with horns as loud speakers. The action of the diaphragm of a plunger was to change the volume of the air in the sound-box and force a high amplitude sound wave from the orifice into the horn, while the old style diaphragm changed the volume of air in the sound-box by flexing. The usual difficulties of sound-box resonance were present, and the addition of the horn added certain resonant periods."

I was referring to the loud speaker marketed by the R. A. Thompson Manufacturing Company of Jersey City and the S. G. Brown, Limited, of London. Both of them employed conical diaphragms in conjunction with sound-boxes and horns and were used in radio receivers. They consisted of a conical diaphragm sound-box and a horn attached to that and were marketed for use in connection with a radio-receiving set.

The S. G. Brown Company, Ltd., is a British concern. It is the same Brown who was an English patentee in some of the patents in the prior art in suit.

I am asked to look at the cone shown in the patent to William H. Davis and F. E. Joss, No. 1,312,958, patented August 12, 1919, and confine myself to the cone structure itself, and tell what difference if any exists in the cone structure there shown and in the cone structure of yours illustrated in your paper. They are very similar. As a matter of fact, I believe they are the same shape. They are substantially identical.

MR. DARBY: I ask to have the Davis & Joss Patent No. 1,312,958 put in evidence.

(Received in evidence and marked "Defendant's Exhibit No. 40.")

As a director of the Lektophone Company I keep familiar with the activities of the Lektophone Company and its associated companies in a moderate way. I have no official capacity. I am familiar with the fact that the Lektophone Company has made arrangements with respect to foreign countries, the patents in foreign countries on the Hopkins invention. I am likewise familiar with the fact that the Lektophone Corporation or its foreign associate engaged in some litigation in England. I know that a suit was brought against the S. G. Brown Company, Ltd., of England.

MR. DAVIS: I may say that the patent has been litigated in England and also in France, and I have at home copies of the decisions in both cases. In England the validity was sustained but it was held to be limited to phonographs.

THE COURT: That is the Hopkins patent.

MR. DAVIS: The Hopkins patent. In this country Hopkins took out two patents, 527 and 529, and in England there was but one patent.

THE COURT: Corresponding to the 529 only?

MR. DAVIS: It was filed in England before 529 was divided out from 527 and that thing was held in England to be confined to a phonograph. In France the case went up and the patent was held to be valid and infringed and it went up to the Court of Cassation which affirmed. The same references, Lumiere, Stroh, Starling & Cole, were before both of those courts.

MR. DARBY: My understanding is, and if Mr. Davis will merely supplement the statement with one or two more facts, it will serve my purpose just as well.

MR. DAVIS: You go ahead and I will supplement it.

MR. DARBY: The Brown cone charged to be an infringement in England was eleven inches in diameter and I have not got, but I can obtain a copy of the British patent which I would like to offer in evidence without comment for use in argument with regard to the subject matter claimed in the British patent——

MR. DAVIS: If Mr. Darby has a copy of it he certainly—I have no objection to its being put in evidence.

MR. DARBY: All I wanted to get in was the subject matter of the claims in the British patent.

MR. DAVIS: Suppose we submit here for your Honor's perusal if you care to peruse them all of these decisions in the foreign courts so that they will be on file here.

MR. DARBY: I have not any objection to that.

THE COURT: Then anything that I have resort to should be available to any Appellate Court. Could we do that without putting it in evidence?

MR. DARBY: Surely.

THE COURT: Can we do this—they are not available now—but either party may have the privilege of putting the foreign patents in evidence at this time. Of course, the opinions may be resorted to without being put in evidence.

MR. DARBY: If Mr. Davis is going to supply your Honor with copies of the opinion, I have been unable to get completed opinions of the two cases in time, my time was rather limited in preparing for this trial, but my understanding is that the claims of the British patent are spread out in the opinion of the Court, and so if Mr. Davis will allow you to have that, that ends it so far as I am concerned.

THE COURT: All right, then the opinions will be made available.

MR. DAVIS: Yes.

MR. DARBY: I think it should also appear that the cone of Brown that was charged with infringement had a paper rim.

THE WITNESS: As to whether or not, in a cone structure made with a paper rim such as Plaintiff's Exhibit 31, that the paper rim gives off sound waves, I

believe that any body by vibrating, if the body is capable of reflecting sound waves, will give off sound waves and paper is no exception to that. The paper in that particular device, Plaintiff's Exhibit 31, contributes in a very small degree to the production of sound and at the higher frequencies contributes much less. I stated in my paper "In the Development of the Cone Loud Speaker" (and there I was referring to my own work in that line):

> "In the development of the cone loud speaker, many different types of construction were tried. Various materials, including hard rubber, celluloid, wood, metals, paper, etc., were tried for the cone. A fibrous paper, not highly calendered, operates satisfactorily, and presents a good commercial solution. The thickness of the paper should be approximately one mill (.001") for each inch of diameter, providing a soft finish paper is used; the thickness should be less if the paper is hard finish. The harder the finish of the paper, the greater will be found the tendency to depart from the cone shape, and undue stress will be set up in the paper, which will give rise to rattles, due to 'tin-can' actions."

As to what I meant by "tin-can actions," this was described before a semi-technical body and tried to put in as plain language as possible. The tin-can action is caused when you form a cone out of very thin paper, the atmosphere affects it and flat spots occur in a cone where the paper is not curved but flat, and when the vibrations are imparted to the cone, these flat spots rattle much in the same manner that the bottom of a tin can will rattle.

Then my paper stated: "The freedom of movement, of course is hindered somewhat by the flexing of the paper at the edge. This flexing involves a loss of power which can be compared to hysteretic losses."

I was referring to the cone in figure 1 of the article. That, is a cone provided with the rim portion clamped between the rings.

All these structures supported at the edge lose a small amount of power in moving the material at the edge in its flexing. This I said can be compared with hysteretic losses.

Hysteretic losses are taken from the electrical art where magnetic flux is changed in a piece of steel, and in changing the flux in the steel a certain loss of power occurs which is termed a hysteretic loss, the analogy being that in moving paper, changing its shape by flexing it, you lose power in changing it. That is true in flexing any body, springs, for instance, there is a loss of power in the spring called the hysteretic loss.

My paper continues:

> "Experiments were conducted to determine the amount of these losses and to lessen them. Sandpapering an annular portion at the edge of the cone, or substituting light flexible paper or other material, and castellating the paper edge, were tried. Where heavy paper was used, the above experiments improved the results, and were manifested by an increased clarity of treble. Complete freedom of the edge was obtained by suspension of the cone on silk thread. The photograph at the top of page 514 is of the free cone device. The cone was mounted on a paper straw, and reinforced by silk threads from the straw to its periphery. On one end of the straw was mounted a bobbin which floated in the annular field produced by the electro-magnet. The complete assembly was supported by threads. There was nothing to retard the axial motion of the bobbin; it floated freely in the sound wave, and motions as large as ⅛th of an inch were sometimes noticed when used."

That device was used as a microphone and not particularly good as a loud speaker at higher powers, the one-eighth inch motion was not the motion when used as a loud speaker. That was a motion that was observed when the "H" sound the "huh" expression, the first impulse of the breath would move the cone one-eighth of an inch. The device operated as a loud speaker, however, but not at any such output as would be undergone by one-eighth inch motion of the cone because paper rattles, deformation of the cone would result and blasting occurs.

It was with respect to the cone suspended by silk thread that I was referring. The one having no rim support for the cone structure.

In other words, I found that with the hinge structure, it was desirable to make more flexible the motion of the cone, to obtain the particular type of reproduction you wanted in that particular structure. Other structures you would not have to sandpaper the edge of the cone because the paper might be sufficiently flexible.

There are two types stated in my paper, one in which the edge is castellated and that was particularly flexible not to be improved by sandpapering the edge. The other type which was pressed out of steamed paper in one piece was improved particularly when used in conjunction with a moving coil, so-called dynamic type of loud speaker motor. It, however, was not improved when used in conjunction with the magnetic type motor.

You call my attention to the fact that this statement which I am reading over again did not refer to the castellated type. "The freedom of movement, of course, is hindered somewhat by the flexing of the paper at the edge. This flexing involves a loss of power which can be compared to histeretic losses."

Immediately thereafter, I state, "Experiments were conducted to determine the amount of these losses and to lessen them."

That refers to the cone structure described in the whole article and illustrated in Figures 1 and 3 and described in the paper. I describe castellated structures in the article, too, a paragraph later.

A device may be stiff but may not have a great deal more hysteretic loss. You sandpaper the edge and you can reduce the stiffness, and the reduced stiffness may permit the cone to move a larger amplitude of motion and hysteretic loss may be the same as the device with a stiffer edge moving a lesser motion, so that it depends largely on how you are using this device. If you are using it on a motor which has the characteristic that tends to move it to the larger amplitude, your hysteretic losses may stay constant. If the motor is a motor of some fixed amplitude, the hysteretic losses would be lessened by the sandpapering.

Having pointed out that with the floating free edge diaphragm motions as large as one-eighth of an inch were sometimes noticed when used, I stated as follows:

> "As this was done, it was found that the edge of the cone, due to the slowness of curvature, was not inclined to move integrally with the rest of the cone. This was overcome by making a circular trough-like portion at the edge, which reinforced it, and retained the circular form of the cone. A method nearly as effective is to reverse a small portion of the cone at the edge, making a V-shape trough instead of the circular trough."

The Pathe loud speaker which is in evidence as Defendant's Exhibit No. 20 is an illustration of the V-shaped trough.

Then my article goes on:

"The advantages of freeing the edge of the cone are so slight that operation can be equalled by suitable proportion, while the mechanical advantage of a supporting ring at the edge of the paper are apparent. The outer portion of the cone can be conveniently turned inward and the mass of the supporting rings and its supports materially reduced without affecting its operation."

As to whether or not I considered that in some respects a free edge cone had advantages over a cone held by rings, and that the only advantage that I acknowledged at that time in October, 1926, or eight months previous to that time, was purely a mechanical construction, an advantage in employing rings; and so stated it in that article, my answer is: the article was discussing a structure of a free edge type used as both a microphone and a loud speaker. Now, a free edge device had certain advantages of sensitivity, that is, at low amplitudes, very small amplitudes, it moved more easily without restraint than the bound edge type. However, the bound edge type had mechanical advantages of support and was capable of larger amplitude of motion and greater sound operation.

MR. DARBY: I move to strike out the answer as not responsive.

THE COURT: Motion granted. Recess until 2 o'clock.

THE WITNESS: During the recess I have looked over that portion of the article to which the question was directed, and in answer——

XQ. 259. I have not asked any question yet except that. Have you had an opportunity to review the article since the noon recess?

A. Yes.

Just before the heading of "The Requirements of a Good Horn," at the beginning of the article, appears this statement:

> "In the development of the telephone it became evident that it would be desirous to have the surface of the diaphragm move integrally from its center to its edge, so a diaphragm of conical shape was resorted to."
>
> "The conical shape gives extreme rigidity to axial motion and provides a surface which moves as a plunger, and which is of small weight."

Now, I used the term "plunger" there to indicate bodily movement without flexure.

The statement continues:

> "Cone diaphragms were used in telephones and were sometimes used in connection with horns as loud speakers."

I meant in connection with radio apparatus.

The statement continues:

> "The action of the diaphragm of a plunger was to change the volume of the air in the sound box and force a high amplitude sound wave from the orifice into the horn, while the old style diaphragm changed the volume of air in the sound box by flexing."

I meant by that statement that in the conical diaphragm I had a plunger bodily movement as distinguished from flexual movement of the diaphragm, that is, flexual movement of a flat diaphragm.

In the third paragraph following appears this statement:

> "Hopkins made a large step in this direction by evolving a practical conical diaphragm of suffi

cient size to produce a sound wave of magnitude comparable to the original sound, without the use of a horn. This was successfully used with a phonograph. Large diaphragms of this character will produce a sound wave of magnitude of a normal speaking voice with a small amplitude of motion. To produce the same magnitude of sound with a small diaphragm and horn requires a much larger amplitude of motion and higher amplitude sound wave in the sound box. This high amplitude sound wave is passed out through the narrow neck-like opening of the horn and expanded along its walls and, as the area constantly increases, the amplitude of the wave decreases and ultimately passes to free air at approximately the same amplitude as the wave produced by the large diaphragm."

I meant by that statement that I could get the same volume of sound with the smaller diaphragm and horn by employing greater amplitude of movement of the cone.

I agree with Dr. Miller that in operation, in normal operation, as a loud speaker, the Fada diaphragm in reproducing transmitted speech or musical program, operates throughout its entire conical portion.

It vibrates throughout its entire conical portion, but I have already described what I consider to be the areas which were active in producing the sound operation.

Taking the note characteristic to any particular frequency, let us say, 2786, as to whether or not that note, or the vibrating portion of the diaphragm is going to be confined to any particular spot on the paper, or is apt to be caused by vibration at any portion of the paper cone, my answer is: The note of a frequency of 2786 would be generated principally by the central portion of the conical structure; but incidental thereto

would be wave motions due to both the radial wave and the parasitic wave.

They would give off sound to a lesser degree.

As to whether I do or do not agree with the statement that any portion of the paper cone will give off any note of the range of audibility reproduced by the cone in operation, my answer is, at some frequencies I imagine a certain portion of the cone, that is, at the higher frequencies, may be standing still; this is evidenced by some of the nodal lines. At lower frequencies the nodal lines probably mean that there is no relative motion in a cone, but the entire nodal line may be moving with the cone bodily, so I can not really agree with the general statement.

XQ. 269. Then you disagree with the statement that any particular note given in use, is actually given off throughout the entire height of the altitude of the cone?

A. As I understand your question it was that any portion of the cone would generate the sound. My answer is that I believe some portions may be inactive in producing sound.

XQ. 270. And you referred, as I recall it, to nodal radial lines as being inactive?

A. I refer to radial nodal lines and circular nodal lines, both.

XQ. 271. Then what answer can you give me to this question: Do you or do you not agree with Dr. Miller's statement that any portion of a Fada cone in normal operation will give off sound of any frequency that is reproduced by the loud speaker?

A. I do not agree with that. I believe it is quite likely that some of the portions of a cone are inactive in producing sound at certain frequencies.

XQ. 273. And what portions of the cone do you think are inactive in producing sound at low frequency?

A. At low frequencies, particularly where the

cone is moving practically as a plunger, I believe the entire area of the cone is active.

XQ. 274. Is what?

A. The entire area of the cone is active in producing the sound.

XQ. 275. And what portions of the cone do you think are inactive in high frequencies; that is, the higher frequencies to the audible limit?

A. At the higher frequencies toward the upper end of the useful range, that is, towards 5000 cycles, I believe the areas at larger radii are probably inactive particularly where there are nodal lines.

XQ. 276. And illustrating that in the sand patterns of the defendant's cone, I call your attention to Defendant's Exhibit No. 32, and will you point out and describe with reference to that exhibit, what portions of the cone are giving off the sound waves?

A. This pattern was taken at 400 cycles and I believe substantially the entire cone was active at that frequency in producing sound.

THE COURT: What?

THE WITNESS: And I believe substantially the entire cone was active at that frequency in producing sound at 400 cycles, that is, by its plunger motion, piston-like motion or vibratory motion in the body of the cone itself, well, at 400 cycles, the cone is flexing so little it is substantially a plunger. At that point it is starting to depart from what appears to be the plunger action, and its departure is more evidenced.

XQ. 277. And on the cone, the radial black lines indicate the portions of the cone which were not vibrating as distinguished from plunger-like action; is that right?

A. I would not say so. The black lines indicate that the relative motion existed between the light areas and the dark areas. That is, the radial nodal line of

this exhibit might very well have been moving itself as a plunger with the rest of the cone, but the light areas indicating the loops between these radial nodal lines were moving with respect to each other.

XQ. 278. And referring to the 6400 cycle sand pattern, Defendant's Exhibit No. 37, would you say that the sound waves were emanating substantially from the entire surface of the paper cone?

A. No. I would say it is very doubtful. I think as a matter of fact, that they would be emanating principally from the central portion of the cone.

XQ. 279. By that you mean the inner edge?

A. The area near the apex of the cone or near the voice coil.

XQ. 280. What do these white spaces intermediate to the edges mean in the sand pattern?

A. It means that they are the portions of the structure which are indicating the most violent vibrations.

XQ. 281. And undergoing vibrations in the form of waves more or less, are they not?

A. Yes. The adjacent light areas are moving in opposite direction, and they are so close together that the air is undoubtedly circulating between those nearby areas. Furthermore, the sound wave initiated at the center of the central portion of the diaphragm travels so much faster than the wave does in the material itself, as a matter of fact, five times faster, that it is well away from the diaphragm by the time the wave has reached these areas in the outer portion of the diaphragm.

XQ. 282. And if it were possible to take a cross-section of the diaphragm at any moment, the wave would be somewhat as illustrated in your left-hand column of the Chladni figure?

A. I might explain that.

XQ. 283. Will you answer that first?

A. It would depend upon what type of vibration is employed. If the vibration is one impulse such as a staccato note or a pistol shot or something slightly longer in duration than that or in the lower tones a bass drum, it might not look like that at all, because the single impulse would travel out, but if the impulses were a successive and continuously applied vibration actuating the structure, then you would have a wave traversing continuously and you would get a cross-sectional view such as shown in Fig. 2-A.

If, however, it was a single impulse, the wave in the beginning in a cross-section view would show at a central portion and a short time later it might show the single wave off the diaphragm until it reaches the edge.

XQ. 284. You understand that the sand patterns are not made by a single impulse?

A. No, with a continuously applied vibration.

XQ. 285. I think that you have stated that the white spaces intermediate the two edges of the cone indicate vibration of the paper at those points?

A. Yes, they are loops of vibration.

XQ. 286. Do those vibrations create sound?

A. Not necessarily.

XQ. 287. Taking this sand pattern, will you say that these vibrations indicated in that sand pattern did not create sound?

A. I could not say exactly. I am giving you my views on the relative amounts of sound produced and my reason in saying that is that the sound is produced in the central portion of this particular figure even though these areas are vibrating, the ones more than half-way, or more than half-way off the cone structure radially, that although these areas are compressing and rarefying the air in the immediate vicinity to them, that immediately adjacent thereto there is another area acting in exactly the opposite sense so that

those two adjacent areas tend to neutralize each other, and although the compression and rarefaction is going on, the net result may be no sound or a slight sound.

XQ. 288. I think that you stated in your article: "Unfortunately the receiving equipment at that time did not permit the broadcast listener to appreciate the quality of transmission."

What time were you referring to, around 1925, 1926?

A. That is referred to in the line before, in the spring of 1922.

XQ. 289. And then in connection with the same subject you stated:

> "The loud speaker, being a device which produces the sound, is generally blamed for all the deficiencies of the receiving system including those due to poor receiver, vacuum tubes, batteries and at times even the deficiency of the broadcasting."

That was correct at that time, was it not?

A. It is even still true.

XQ. 290. And you also stated in your article:

> "An unfaithful reproducer will, however, smooth these rough edges of the sound and give a more pleasing tone. This deceives the listener into believing that the more faithful speaker is faulty, whereas the facts are that the speaker is faithfully reproducing the voice which has been distorted by the vacuum tubes."

In the demonstration that was given by you between the paper cone with the paper rim as compared with the standard Fada loud speaker, Plaintiff's Exhibit O for Identification, you stated, as I understood you, that the Fada loud speaker was more efficient at higher

frequencies in that the paper rim loud speaker did not reproduce the sound similar to a needle scratch. Is that an illustration of the fact that an unfaithful reproducer will, however, smooth these rough edges of the sound and give a more pleasing tone as stated in your paper?

A. No, it is not.

XQ. 291. Why is it not?

A. I was attempting to say in saying that the Fada speaker was more efficient at high frequencies that there was a difference in the two and that at these extreme frequencies the Fada speaker being more efficient gave more of the sibilant sounds. However, I believe that the other model with the paper rim was amply efficient in this regard to give what would be termed faithful reproduction. Might I remark about your quotation, what the connection is? I do not get the connection of your quotation.

XQ. 292. I will try to make it clear here. Would you say that in that comparison that you made that the Fada reproducer or loud speaker was a more faithful reproducer than the Plaintiff's Exhibit 31 with the paper hinge as demonstrated?

A. No. It would be difficult to say just which was the most faithful. It might have been that the Fada speaker were less faithful and overemphasized the needle scratch.

XQ. 293. As demonstrated here in court you say that the Fada reproducer was not more faithful than the paper rim cone Plaintiff's Exhibit 31, is that correct?

A. Yes, I do not think it was more faithful.

XQ. 294. And yet as you testified previously you state that the Fada speaker was more efficient at frequencies beginning around 3500 cycles, is that right?

A. Yes.

XQ. 295. And you could hear 3500 cycles in Fada plainly and you could not hear them plainly in the paper rim structure, is that right?

A. Yes.

XQ. 296. And also you testified at one time under cross-examination that——

A. Pardon me. You say could not hear them on the other structure, is that the question and I answered yes?

XQ. 297. I do not know what the question was.

A. I want it repeated.

XQ. 298. You seem to have no hesitancy in answering it. If you misunderstood it I will be willing to re-read it to you.

(XQ. 295 repeated as recorded.)

A. I will change that answer. No, I could hear them plainly in both structures. In the Fada structure they were louder than in the paper rim structure and I said the efficiency is higher in a device when it is resonant and sometimes, as I described in previous testimony in this case, we get resonant conditions which are objectionable. At these resonant conditions you get extremely high efficiency, but that does not necessarily mean that the device is very faithful.

XQ. 299. And you also testified in cross-examination that you considered the essential frequencies in a loud speaker device to be between what figures?

A. 50 cycles per second and 5000 cycles per second.

XQ. 300. And in connection with this paper rim structure you are familiar with various types of cones that have been built and demonstrated as Hopkins cones in the various litigations employing a paper rim?

A. Yes.

XQ. 301. And I think that you testified that the paper rim would vibrate and give off sound waves but of a somewhat negligible extent?

A. It depends largely upon the area of the rim. Obviously the area adjacent to the ponderous rings could not produce any sound and obviously the area actually connected to the conical portion at the lower frequencies will produce sound in the same manner that any material connected to the conical portion will produce sound.

XQ. 302. You attended the trial in the Crosley case in Cincinnati, did you not?

A. Yes.

XQ. 303. You know Mr. Ben E. Brown?

A. Yes.

XQ. 304. Did you assist him in any way in preparing photographs of a Hopkins speaker that was built for demonstration purposes?

A. No, I did not have anything to do with those photographs.

XQ. 305. But you are familiar with them?

A. Yes, I am familiar with them.

XQ. 306. And they checked up with your knowledge of the subject?

A. Yes, he prepared the photographs himself.

XQ. 307. And they were offered in evidence as you recall by the Lektophone Company as part of its case?

A. Yes.

XQ. 308. And I call your attention to the photograph of a sand pattern of a Hopkins device at 125 cycles per second which was part of Plaintiff's Exhibit 20 in the Crosley case and I ask you where is the rim in that structure?

A. The rim is the white annular ring of the photograph.

XQ. 309. And the fact that it is shown white shows that it vibrated, does it not?

A. The rim was made of white paper I believe. The cone itself was made of a darker shade of paper.

XQ. 310. But that is a photograph of a sand pattern?

A. Yes.

XQ. 311. And the fact that it is shown white on this photograph shows that that portion vibrated, is that right?

A. Yes, the rim vibrated, although the area immediately adjacent to the rings, of course, did not vibrate.

XQ. 312. And that 3200 cycles per second, the rim likewise vibrated, did it not, right up to the edge of the support to the annular rim?

A. Yes, the rim vibrated.

MR. DARBY: I offer in evidence the photograph marked Plaintiff's Exhibit 20, you do not mind my offering it at this time rather than having it marked for identification.

MR. DAVIS: No, I have no objection.

MR. DARBY: I offer in evidence the photograph which was part of Plaintiff's Exhibit 20 in Lektophone Corporation v. Crosley Radio Corporation, being a photograph of the sand pattern of the Hopkins cone at 125 cycles per second.

(Received in evidence and marked "Defendant's Exhibit No. 41.")

MR. DARBY: I offer in evidence another photograph of the Plaintiff's Exhibit in the same case, being a photograph of sand patterns of a Hopkins cone operated at 3200 cycles per second.

(Received in evidence and marked "Defendant's Exhibit No. 42.")

THE WITNESS: Referring to the subject of sound-boxes, such as are used in conection with phonographs, when used in connection with a horn of large size extremely low notes can be produced if the horn is made large enough in diameter.

These low notes whether they are produced from a sound-box on a phonograph or from a radio loud speaker, have the same wave length in the air itself irrespective of what produces the note.

In the phonograph art it is necessary to separate the front from the rear of the sound-box chamber, in order to enable it to produce low notes, because you are using the action of one side of the diaphragm only in producing the sound. The side of the diaphragm facing the sound-box is the active side and actually produces the sound that you hear. The sound given off the other side is negligible.

As to what would happen if the sound waves of a low note having a substantial length was allowed to slip over the edge of the cone and get behind the edge of the cone, the net result would be very little production of sound. Due to the fact that the air would slip around the edge and get in back of the cone, and also due to the fact that you are not actually compressing the air in the sound-box which you are trying to do.

As to whether or not that is one of the reasons why they use a horn in a sound-box, I hardly believe so because you see the operation of the sound-box and a horn is such that a low tone is not really created until you reach the mouth of a large horn and then it is so far removed from the diaphragm that you do not need anything between it and the diaphragm to prevent it from circulating it to the other side.

A horn does not prevent a low note wave from slipping over the edge of the diaphragm and getting

in back of the diaphragm itself, because the wave is not formed. All you are dealing with in a sound-box is pressure. You have to establish your pressure first and let it expand along the contour of the horn and finally released at the mouth of the horn and there you have a sound wave.

I do not consider the sound-box and the horn of a sound-box horn combination as a baffle. Yet I admit that you get very little sound unless some means was taken to prevent the fluid air from in front of the diaphragm from slipping around and getting in back of the diaphragm. That means has to be a horn. For instance, it could not be a tube. In other words, it cannot be just merely a separating structure. It has to be a horn and so tapered that the high-pressure impulse at the throat of the horn is permitted to expand. If you apply the same thing to a tube you would not get the low-frequency sound wave.

The function of a baffle is quite different. You are dealing with a low-pressure impulse in which the wave is formed much nearer to the diaphragm, so that you are actually preventing the partly formed sound waves from intermingling.

I do not think that a horn does that at all in a phonograph, because the waves are not formed until they are practically at the mouth, these low-frequency tones that we are discussing.

I referred to the high pressures in a sound-box. As to what causes the high pressure, the restricted chamber on one side of the diaphragm which is in itself a sound-box and the action of the diaphragm compressing the air in the chamber makes a very high pressure impulse, which is admitted to the throat of the horn.

In the sound-box art, that is a flexural movement of the diaphragm, in some sound-box art it is a flexural movement and in other structures it is more of a piston nature. In the sound-box art, the diaphragm flexed and

caused a compression of air in the sound chamber, that is, either flexed or moved as a plunger and compressed the air in the sound-box chamber.

The air goes from there and passes to the small opening at the base of the horn called the throat. When it is admitted to the throat of the horn it is not in any way a sound wave but a high-pressure impulse which pressure is gradually lessened as the impulse travels out toward the opening of the horn.

I listened to a sound-box of a phonograph with the horn removed many times. I heard the reproduction of high frequencies only and a complete lack of bass. I have listened over a telephone receiver. I have laid that telephone receiver on the table and heard it speak. I have noticed an entire absence of bass notes in that, that is, low frequency notes. I put it up to my ear and I could hear everything beautifully.

You are compressing the air in the chamber between the telephone receiver and the diaphragm of the ear drum. The sensations caused, depend upon different phenomena there, that is, the lower tones are more pronounced, because the air is actually compressed in that sound-box existing between the diaphragm of the telephone receiver and the diaphragm of the ear, the pressure on the diaphragm being proportional to the displacement of the diaphragm rather than to the velocity of the diaphragm as in the case of the loud speaker.

The lowest frequency I have ever been able to hear on the phonograph and horn is 130 cycles. I mean on commercial records; specially constructed records go to 25 cycles. The wave length of 25 cycles is 45 feet. The length of the horn that I was using when I heard that was relatively small in comparison. It was two or three feet. In length, probably a foot and a half in diameter. The length of my horn was a very small fraction of the wave length.

The record used was a simple tone at 25 cycles, and the response was relatively weak for the amount of vibration recorded on the record. A commercial record of that sort, if you had the rest of the audible frequencies on it, the effect produced would be that the higher tone would completely drown the lower tone. This was just a laboratory experiment to hear the low-tone record.

Getting back to the commercial record, the frequency that I said that I heard was 130 cycles. The length wave of 130 cycle is about 7 feet—about 7½ feet. The length of the horn that I used when I heard that was about 3 feet.

As a matter of fact, I could have used a much smaller horn. It is a matter of proportion of the tone to the ear to the high to give the quality and the amount of base. And the horn, I used was a fraction of the wave length.

An over-tone is the harmonic tone of a resonator when vibrating at its fundamental, and they are classified as, first, second, third and so on, over-tones meaning that if the resonator were vibrating at 100 cycles, 200 cycles would be the first over-tone. They are multiple frequencies. In music, however, there are slightly different relations—the first case I gave was in electrical circuits—in music, however, and in vibrating systems, you have over-tones that are fractions, fractional increases, that is, you can get three halves and so on of fundamentals.

You always get over-tones in radio reproduction. They exist in the actual generation of the electrical impulse itself on a record or from the original sound impulse by means of the microphone, and all that has been successfully done so far is to minimize the production of the over-tones, without attempting to produce a simple tone. Distortion emphasizes over-tones. Amplifica-

tion and distortion is resulting therefrom, emphasizes it.

The Fada loud speaker, for example, reproducing an orchestral selection, reproduces, I would say, very well between 50 cycles and 5000 cycles. The over-tones of the orchestra would have to go much beyond that, in order to distinguish the highest note of a violin, from the highest note of a flute, of the same pitch you would have to be capable of reproducing the harmonics necessarily involved in the violin note which may extend to 10,000 cycles. Very frequently in radio broadcasting reception, reproduction is limited to about 5000 cycles, and that slight differentiation in the higher notes is not taken care of.

That is, it would reproduce over-tones up to the limits of reproduction of the cone itself. And therefore the actual sound wave vibration of the Fada loud speaker in actual use is a rather complex pattern, if a sand pattern were made of it. It would be a continually shifting sand pattern. It might have in one instant a simple frequency; it might at the same instant be subjected to a composite of several frequencies, and it would be a very complex pattern continually shifting.

RE-DIRECT EXAMINATION.

This device that is shown in Fig. 3 of the paper which I read and which Mr. Darby brought to my attention, and which is called the Phonetron in the paper, that is the device which I testified earlier that I manufactured and sold in 1921.

As to what I used as the conical diaphragms for this Phonetron device; that is where I got them—the diaphragms of the Phonetron were purchased from the Pathé Phonograph & Radio Corporation—that is wrong—the Pathé Phonograph Company, who had ma-

chinery for making them out of one piece of paper at that time.

I was familiar with the phonograph that was made and sold by the Pathé Company known as the Actuelle. That was made and sold before I developed the Phonetron.

As to whether or not the diaphragms of the Phonetron were the same as the diaphragms that were made and sold in the Actuelle phonograph, they were the same, made by the same process and of the same material.

MR. DAVIS: I offer in evidence a copy of the paper in question as Plaintiff's Exhibit No. 34.

(Received in evidence and marked "Plaintiff's Exhibit No. 34.")

In a faithful loud speaker, as to what must be the relation of the efficiency of reproduction at one frequency, one-tone frequency, to the efficiency of reproduction at another tone frequency, a faithful loud speaker should produce all tone frequencies within a useful spectrum, from 50 up to 500 cycles, with the same output of sound for the same uniform input of electric power; that is, the response of a loud speaker at different frequencies should be uniform before it can be considered faithful.

My attention is directed to the paper of Maxfield & Harrison, which was put in evidence as Defendant's Exhibit No. 7, and was referred to by Dr. Miller, particularly to the frequency diagram that was discussed by Dr. Miller. The curves on that diagram are efficiency curves, showing the efficiency of the respective loud speakers at different frequencies.

The efficiencies of respective phonographs. I believe curve A refers to the phonograph structure of Fig. 19 on that paper, and curve B refers to one of the

best commercial machines previously on the market, which I assume was also an original machine.

The graph here shows the relation between frequency plottings on the horizontal axis and the transmission units, which really in themselves mean the sound output; and if the curve were a horizontal line, the sound output would be uniform throughout the range between 120 cycles and 5000 cycles. Yes, I examined this with the glass, with those pencil figures on the drawing here. However, below 120 cycles, the reception drops to zero, and it does not reproduce below that. They have termed it a band pass filter, because it passes this band of 120 cycles to 5000 cycles. The sharp cut-off at 120 cycles is due to the size of the bell opening of the horn. The larger the bell opening of the horn the lower the cut-off frequency.

I said on cross-examination that the steepness of a cone, other things being equal, affected or might affect the efficiency of reproduction at different frequencies. Now, I will tell you whether the making of the cone steeper increases or decreases the efficiency at high frequencies, other things remaining equal.

The steeper the cone the greater its efficiency at high frequencies.

RE-CROSS-EXAMINATION.

As to how many of these Phonetrons I made and sold, I do not recall. It was more than fifty and less than 100. They were sold for radio amateurs. Broadcasting was not produced then; there was no market. I discontinued that structure because the amateur market was very limited. It was not until broadcasting came along that it became a real market and could support a manufacturing concern. When the broadcasting market came along there was created a demand for loud-speaking devices.

I referred to the Pathé Actuelle. The diaphragm structure of the Pathé Actuelle was like that shown in the Davis and Joss patents, Defendant's Exhibit No. 40. That was used directly in connection with the phonograph. That likewise was discontinued.

MR. DAVIS: I want to offer in evidence the charts to which Mr. Farrand referred; and I offer in evidence the chart marked "Figure 1" as Exhibit No. 35, and the chart marked "Chladni figures" as Plaintiff's Exhibit No. 36, and may it be understood that we will substitute photostat copies for those to be actually marked.

(The chart marked Figure 1 was received in evidence and marked "Plaintiff's Exhibit No. 35.")

(The chart of Chladni figures was received in evidence and marked "Plaintiff's Exhibit No. 36.")

MR. DAVIS: And while I am at it, I should like to have marked for identification, so that it will be available to the Court, and Mr. Darby suggests this, the Fada cone and rings removed from the driving unit, which was used during the examination of Dr. Miller, both by Mr. Darby and myself, and I think it would be sufficient to have it here marked for identification, and not put it in evidence.

THE COURT: Very well.

(The Fada cone and rings were received and marked "Plaintiff's Exhibit Q for Identification.")

MR. DAVIS: To make the record complete, I offer two Brandes loud speakers, which are marked

respectively for identification B and C, only for identification, because it seems to me unnecessary to put them into the record, so that if there is no objection I will leave them here marked for identification.

MARCUS C. HOPKINS.

MARCUS C. HOPKINS, was called as a witness in rebuttal, on behalf of the plaintiff, and having been duly sworn, testified as follows:

DIRECT EXAMINATION BY MR. DAVIS:

I am the inventor and the patentee of the patent in suit.

I had a very good technical training in the grammar and high school at Washington and some special training in Columbian University, and by my father, in preparation for following in his footsteps in the patent business, and I had a very thorough musical training covering about thirteen years with the best of teachers. I played the violin.

I was very much interested in acoustic phenomena for a long time scientifically, and I finally got very much interested in mechanical reproduction of music, which was at that time the phonograph business. I thought it might be very much better than it was. It had its shortcomings and I engaged with Mr. Plum in Newark in experimenting and designing and building and selling phonographs from about the year 1905, or for four or five years.

After that I had an opportunity to choose what was most to my liking and I went up to Mr. Edison's laboratory, where I thought I could learn considerable, and there I worked the best part of two years for him as an experimenter. At that particular time we were in-

terested in the horn and sound box combination phonographs, and there was a transition period between the straight observable horn and the cabinet machine where the horn was enclosed in the cabinet and out of sight and more sightly device, and in their efforts to put the horn inside of the machine Mr. Edison became interested in finding out what he could about the shape of the horn.

It seemed to spoil it when we got to bending it up and putting it in cabinets, and he put me on a line of experimentation to find out how the horns worked. There was not very much in the literature, and what could be done with them. I made a great many of them.

I had available all of the laboratory equipment which consisted of machine shops, chemical laboratories, physical laboratories, a storehouse in which had been collected a little bit of pretty nearly everything from every part of the world.

I experimented a great deal on sound-box and horn combinations that already had been made up to that time and then I began to make horns out of various materials, a great many materials and a great many shapes and sizes and finally arrived at some that were outstanding for their apparent improvement but they contained things that were drawbacks. There were distortions, and I should say distortions that we did not seem to be able to remove and I practically reached a standstill so far as I believed I could go at that time and with Mr. Edison's consent I decided that these troubles were in the sound-box and horn combination and we did not know how to get them out and that I would try some of the direct propagation methods, there were a number of them that existed at that time, we might call them sound-board methods.

There were a number of musical instruments that depended on the direct propagation of sound by shaping a broad surface in contact with the air and the horn

was used solely to get enough energy on a broad surface of air and I felt that if we could do it directly we might evade these peculiarities that seemed to be inherent in the horn and sound-box combination.

So I started by trying all the sound boards that were available to us at that time, the piano and the guitar and the zither and a number of those instruments and found them too heavy and too stiff and began to make my own sound boards, much lighter and more delicate and with increasingly good results as they got lighter and more delicate.

Those improvements of course came gradually and we finally got to making these sound boards out of paper. We made a sound board where the top and bottom were paper with several divisions and in order to get the lightness and requisite stiffness as a purely engineering proposition, I resorted to the conical form of a cone of paper.

I did not look forward to anything other than a very light stiff device, but the moment we began to play with it there was a jump in the results, that at that time was perfectly marvelous and astonishing.

We began to get real fine results right away. We began to study this form of device alone, just the cone part of it. It was the same thing that we have here, the Starling & Cole cone without any attachments at all. It worked very well except that it was subject to these blasting effects that have been demonstrated here and was not a very practical device to use if you wanted to build a phonograph.

So the experiments continued and we began to mount the thing and try means of suppressing the wave in the paper and mounted it in various ways so that we were trying to keep the axial or piston movement and take the wave out, but the first experiments of suppressing the wave also affected the result as we had already obtained it.

As to what sort of experiments those were, it was mounting it on various supports such as felt and paper and we very shortly found that we could not get paper to go over the front of the cone.

We mounted the cone on a flat diaphragm of paper first and as I remember the first real good one was produced from that paper cone mounted on a paper diaphragm and the flat part was cut out of the cone.

Within the bell of the cone was cut out. That flat paper had been mounted on a wooden ring, a rather heavy wooden ring, and in drying it became very taut like a drum head, and after the middle had been cut out we glued the cone on to the flat part, and after the middle had been cut out we had a wonderful result.

From that time on we made many, many of these structures changing the factors as to size of the cone, and the material of the cone, and the angle of the cone and the width of the edge.

We recognized that there was something remarkable in this structure and we found that by changing these factors we could change the result in many different ways and of course these subsequent experiments were to get the result that we were after, which was the reproduction from the phonograph record that would suit us at least equally or better than came from the phonograph at that day.

The phonograph was particularly lacking in basses. The basses were there but the quantity of bass as compared with the rest of the range of the piano was deficient and one of the first things which we recognized with the cone was that we had the ability to increase that amount of bass. We built the cones up to size beyond the mechanical possibilities that we had then and down in size to a point where they did not give satisfactory results.

Going downward we found that the first thing we lost was the bass, and it was rather proportionate to

the amount that we lessened the diameter of the structure. We found that we could do very satisfactorily, and very satisfactorily for those times, with the structure which we finally arrived at and which is illustrated in the patent.

The drawings of the patent drawings were drawn directly from the finished machine.

CROSS-EXAMINATION.

As to my occupation, at the time my application for patent was filed, I was engaged in the patent business with Pennie, Davis, Marvin & Goldsborough. That is the precedessor of the present firm of Pennie, Davis, Marvin & Edmonds.

I was writing specifications and prosecuting applications for patents. I prepared my own specification in great measure, but I had the idea that perhaps the inventor was not the best attorney and I, after my preliminary preparation, turned the whole business over to Mr. Davis. Mr. Davis of course had far more experience in the preparation and prosecution of patent applications than I had at that time. I did not keep very close touch with the prosecution of the case.

XQ. 21. You have previously testified that you did, have you not?

A. No, I do not think I did. I did not keep very close touch. I knew about the early stages of the prosecution.

XQ. 22. And from that I gather that you did not keep any close touch with the later stages?

A. No, I did not, not very close.

XQ. 23. You were not familiar with what was being done at all?

A. Not at that time. I was in Rochester.

XQ. 24. And when was that?

A. That was from 1914 on, the latter part of 1913.

XQ. 25. The latter part of 1913?

A. I think so.

XQ. 26. So that you had very little connection with the prosecution of your application from the latter part of 1913 until the patent issued, is that right?

A. I should say very little.

XQ. 27. Did you know anything at all about it?

A. I only knew that it was going on in a more or less satisfactory manner.

XQ. 28. But you did not know the substance of what was transpiring?

A. No, I left that to Mr. Davis.

XQ. 29. You felt sure it was in good hands?

A. Absolutely.

XQ. 30. And you were not interested in the subject matter yourself other than with the knowledge that it was in good hands?

A. That is all.

XQ. 31. You were quite enthusiastic about this device of yours when you completed it and got it started on its way towards a patent?

A. Oh, yes, naturally.

XQ. 32. And quite naturally likewise you went over the application as originally prepared pursuant to your original draft, did you not, before you executed the oath?

A. Yes, I was very interested in it.

XQ. 33. And it correctly set forth the facts?

A. As correctly as we knew how at that time. It was a rather difficult proposition. I think you will appreciate that from what you have heard in this court.

XQ. 34. Yes, I do. So much so that I am wondering why you made this statement in the application as originally filed?

A. I will try and tell you.

XQ. 35. "Compressed fibrous material, such as hot pressed paper or fiber, has been found to act satisfactory, but I prefer to employ hard rubber or vulcanite,

as it is more easily handled, is less affected by weather conditions, and lends itself to the production of a more finished commercial product. The hard rubber is pressed into shape while hot from the sheet and allowed to cool in the die. If a polished sheet has been used the finished tympanum will have a beautifully polished appearance."

You made that statement when you originally made your application?

A. I am quite sure I did.

XQ. 36. And had you ever made a diaphragm of that nature that you advanced as your preferred form at the time you filed your application?

A. I made that type of diaphragm, but I do not think I advanced that as my preferred form. At the time we were having extreme difficulty in overcoming an objection of a delicate paper device as a manufacturable thing and I was making every effort to get something that was less fragile and I made a very thin, hard rubber diaphragm that was very, very good with the hopes that I could overcome the manufacturers' objections, they would not have a thing to do with this fragile paper thing, and they said it was impractical. The hard rubber diaphragm did very well, not nearly so good however as the preferred form that was set forth in the patent.

XQ. 37. I think you stated that your father had been a patent attorney and you received patent training from him?

A. I did not receive patent training from my father. I received the technical work that was obviously intended to fit me for the patent work.

XQ. 38. And prior to the time that you filed your application for patent in July, 1913, how much experience had you in patent work?

A. I was in the patent business in various capaci-

ties starting rather as an underling from 1900 to about 1905; no, from about sometime in 1899 to about 1904.

XQ. 39. Roughly about five years?

A. About five years.

XQ. 40. And how long had you been with Mr. Davis' firm?

A. I went with Mr. Davis' firm, I think it was in the latter part of 1910.

XQ. 41. And you were with them continuously up until 1913?

A. 1913, yes.

XQ. 42. So that you had had at least seven years' experience in the patent business?

A. Yes.

XQ. 43. And consequently when you stated in your patent application that you preferred to employ the hard rubber or vulcanite, you did not intend to mean that that was preferred form?

A. I did not mean that that was the best playing form. At that time it was most necessary not to have an impractical material. It would not work at the seashore at that time, that is, in the period that I am speaking of.

XQ. 44. Let me read you part of your testimony in the Crosley case on the same subject.

MR. DAVIS: Will you give me the pages?

MR. DARBY: 28 in the record on appeal.

XQ. 45. "XQ. 96. Now, isn't it true, Mr. Hopkins, that you really at the time you filed your patent specification, preferred to use hard rubber or vulcanite for the diaphragm, rather than paper?

"A. No, I would have preferred that if we had gotten the hard rubber to do it, but it wouldn't do it. We were trying it about that time."

A. That is true.

XQ. 46. You so testified?

A. Yes.

XQ. 47. "XQ. 97. Well, I want your definite statement. At the time you filed—you signed that patent specification, being a patent solicitor and having worked on it——

"A. Leave that out.

"XQ. 98. All right. You did not prefer hard rubber or vulcanite for the diaphragm? Will you make a positive statement to that effect or against it, one of the two?

"A. I won't make a positive statement. I will qualify it. If you could make it work as well as paper, yes, we preferred it.

"XQ. 99. Well, now, isn't it true that in your application as originally filed, after the sentence which has been retained in your original patent ending in the number twenty-nine 'compressed fibrous material, such as hot pressed paper or fiber, has been found to act satisfactory' you proceeded to say: 'But I prefer to employ hard rubber or vulcanite, as it is more easily handled, is less affected by weather conditions, and lends itself to the production of a more finished commercial product. The hard rubber is pressed into shape while hot from the sheet and allowed to cool in the die. If a polished sheet has been used the finished tympanum will have a beautifully polished appearance'?

"A. We had made those hard rubber diaphragms and gotten very fair results but not up to paper, by any means. But we had seventeen years to look forward to the fact that we might get them, and unquestionably we would have preferred it if we could have gotten it, and would today.

"XQ. 100. My question was more direct than your answer. I asked you whether at the time you did not make that statement in your patent application?

"A. Is it in there?

"XQ. 101. Yes, it is.

"A. Then we made it.

"XQ. 102. Then you were not sold on the use of paper at that time, is that correct?

"A. Yes, I was sold on the use of paper at that time. It was the best thing I had.

"XQ. 103. And you were trying to mislead the public in your statement in your sworn patent application, were you?

"A. No, I was trying to give the public something that would be more durable.

"XQ. 104. Why did you say you preferred it then, if you did not?

"A. Because it was more durable. Now, if you could only convince the public that they did not need quite so much volume, it would have been better all around; but we couldn't."

You so testified?

A. Yes, I did.

XQ. 48. Now, you referred to working at Mr. Edison's laboratory, and as I understood you it was while you were at his laboratory working on this general subject that you invented this cone; is that correct?

A. It was while I was there that I made many of the preliminary experiments, and I made the first cone just before I left there, maybe a couple of months.

XQ. 49. What was your purpose of working with Mr. Edison, were you working for Edison?

A. Oh, yes.

XQ. 50. What were you directing your attention to, developing some sound reproducer?

A. Yes.

XQ. 51. And did Mr. Edison ever adopt your sound reproducer?

A. No, when——

XQ. 52. That is all, you have answered my question. And I understand that the drawings of the pat-

t in suit were made directly from an actual struc-ure, is that right?

A. Yes.

XQ. 53. And the actual structure that you made s far as the cone portion is concerned, so far as I nderstand it, you made the rim out of a separate iece of paper, did you not?

A. Yes.

XQ. 54. Why did you make the rim out of a sep-rate piece of paper and then paste it on the conical ortion rather than making it all out of one piece as hown in the drawings of the patent?

A. We did not have any machines to assume that hape. You cannot bend a piece of paper into that hape.

XQ. 55. You cannot?

A. No, you have to draw a piece of paper into hat shape and it requires machinery and quite a lot f development work that it was not necessary to do hen. We pasted it on to a flat sheet.

XQ. 56. Then to be able to make a cone out of ne piece of paper it would have required a consider-ble amount of development work which had not been one up to that time?

A. Yes. A lot of development work has been done n doing that and it has not resulted in very much yet.

XQ. 57. It would be almost as difficult today to ake it out of one piece today as it was then?

A. It would be difficult. Of course, a manufac-urer building machinery for the purpose would find ittle difficulty. That was not my position at that time.

XQ. 58. And of course at the time that you were arrying on this work you never thought of using your one for loud speakers in radio, did you?

A. My knowledge of radio at that time consisted f not much more than——

XQ. 59. Will you answer my question?

A. I am going to.

XQ. 60. But I ask for a direct answer to my question, which is, at the time you developed this speaker in 1910 or 1911 or thereabouts, had you any thought of using your cone diaphragm as a loud speaker for radio?

A. No, radio had not been developed then and unless a thought of using it for telephone purposes might be connected with your question——

XQ. 61. Do you think that the thought of using it for telephone purposes is connected to radio?

A. I did not foresee the development of radio, no. I did not foresee this development.

XQ. 62. Then your answer to my question whether you foresaw any use of your cone for the purpose of a loud speaker in radio is "No," is that correct?

A. So far as radio is concerned, it is "No."

XQ. 63. When did you first think of using your cone for radio purposes?

A. I do not believe I thought of using my cone for radio. I think Mr. Farrand was the first person who adapted it for radio.

XQ. 64. When did you first think of first using your cone for radio?

A. I did not think. I say Mr. Farrand thought of it.

XQ. 65. You never thought of it up to the present time, have you?

A. Think of using it for the radio?

XQ. 66. Yes.

A. I understood your question was when I first thought of using it or when I conceived of using it for radio. I answered your question that way. I first saw it used for radio by Mr. Farrand.

XQ. 67. When was that?

A. That was the first idea I had that it was going to be available for that purpose.

XQ. 68. And when was that?

A. It is awfully hard for me to say.

XQ. 69. Do you say it was before 1918 or after 1918?

A. The device that has been testified to here known as the Phonetron, and it was in the early days of the existence of that.

XQ. 70. Mr. Farrand says it was sometime around 1921. Does that check up with your recollection?

A. It must have been.

XQ. 71. But it was subsequent to the filing of the patent in suit?

A. Oh, yes.

XQ. 72. I think that you stated that you were familiar with blasting of these cone structures that you were working with in 1910?

A. Oh, yes.

XQ. 73. You were?

A. Yes, I was familiar with the blasting of flat diaphragms and sound boxes long before that.

XQ. 74. What did you utilize as your source of sound in the cones that you were working with?

A. We utilized records in the main.

XQ. 75. And what was the power of those records which you were utilizing for your sound purposes?

A. I have not any measure of the horsepower to tell you——

XQ. 76. And what was the amplitude of vibration?

A. The amplitude of those records I remember measuring 1/1000th and as being a maximum amplitude, as being measured at one time on the cylinder records amounted to about 2/1000ths or 3/1000ths each way and on the disc record I discovered it was 4/1000ths each way from the tracking line on the record without any waves being impressed on it.

XQ. 77. You say two or 3/1000ths. Do you mean two or 3/1000ths of an inch?

A. Yes. That only occurred on the excessive cuts. Ordinarily it is extremely small.

XQ. 78. That was the maximum?

A. And it is still extremely small on the greater part of the range.

XQ. 79. Do you mean to say that with an amplitude of vibration depending upon a maximum movement of two to 3/1000ths of an inch, of those early records that you were able to secure blasting?

A. Oh, yes.

XQ. 80. With your cone structures?

A. Yes.

XQ. 81. These figures that you have given me, which for the cylinder records two to 3/1000ths and disc records four to 5/1000ths——

A. About 4/1000ths.

XQ. 82. Is that your rough guess?

A. No, I actually made some measurements once and hunted through a great number of records to find out what is the greatest amplitude I can find. That I am speaking of now of old type records prior to the filing of the patent.

XQ. 83. Yes, and I think you referred in one of these cases to these old type records as very inefficient as compared to the records of today?

A. Oh, yes.

XQ. 84. In the Sylo case you testified, did you not, before Judge Campbell?

A. Yes.

XQ. 85. And you made this statement——

XQ. 86. "Q. 24. So that a small cone"—and I will recall to you that you were talking about a small cone, smaller than nine inches in diameter—"so that a small cone would not produce those low tones, however you vibrated it, is that the idea?

"A. They would never produce the self-sustaining wave in air.

"Q. 25. At those frequencies?

"A. At those low frequencies of the desired efficiency that it is to make it a part of the audible spectrum."

A. Yes.

XQ. 87. You so testified?

A. Yes.

XQ. 88. Would you testify the same way now or would you modify that answer?

A. I would modify that maybe in the language used, but not in the meaning.

XQ. 89. What?

A. I say the same thing as far as the meaning went, but I might make it clearer in words.

XQ. 90. Go ahead. I will ask you the question right now. Do you say that a small cone would not produce low tones?

A. It would not produce the desired quantity of the low tones to balance the rest of the sound spectrum.

XQ. 91. But you do not mean by that that they would never produce a self-sustaining wave in the air, do you?

A. No, they would produce the high tones amply well.

XQ. 92. Would a small cone produce a self-sustained wave in air of a low tone?

A. It will produce a tone that will likely be away from the front. If you happened to be near that small cone you will get a very, very fair effect from the impression in the air. If you happen to be far from that cone you will find that the wave has spread out and lost its form to such an extent that a very small amount of the energy put on the air reaches that point at a distance, and when the term self-sustaining wave was chosen it was meant a practical production of a wave which would travel out into the air without sub-

stantially losing any great amount of energy by deformation.

XQ. 94. Then will you agree with me that the two questions and your answers thereto in the Sylo case, without the explanation that you have given to this Court, was capable of being misunderstood?

A. No, I do not think so.

THE COURT: What was the answer in the Sylo case?

MR. DARBY: They would never produce the self-sustaining wave in air.

By MR. DARBY:

XQ. 95. Let me ask you this, would you say taking a low tone of approximately 100 cycles per second, you said if you stood near the cone, by that you do not mean that your ear would have to be three inches from the cone, do you?

A. No.

XQ. 96. You could stand five feet?

A. It would depend on how big the cone is.

XQ. 97. Take any particular size cone.

A. Say a three-inch cone.

XQ. 98. You could hear it if you were away three or four feet, could you not?

A. It would not be what I would call a self-sustained——

XQ. 99. But you could hear it?

A. Yes, you could hear that frequency.

XQ. 100. And by what medium is the sound transferred from the movable diaphragm to your ear, air wave?

A. Yes.

XQ. 101. You would not call that a self-sustained air wave, though, would you, yes or no?

A. I would not call the wave started from a three-inch cone, if it were——

MR. DARBY: May I ask for a categorical answer to that question?

THE COURT: Can you not do that?

A. I would say no. That three-inch cone will make plenty self-sustained high tones. I was talking about low tones.

THE COURT: He was asking about frequency of 100 cycles.

THE WITNESS: That is what I understood.

XQ. 102. On the subject of blasting, that was a subject that was gone into at quite some length in the Crosley case?

A. I think that subject has been handled in all of the cases.

XQ. 103. You think so?

A. It seems to me that it has been discussed.

XQ. 105. You testified as follows, as appears in the record on appeal in the Crosley case, page 29, Mr. Davis:

"After we built these plain cones at the Edison plant we found that they blasted. That was a word that was carried down from the old sound-box art. We provided a flexible rim to overcome the blasting. As to whether we devised the rigid clamping ring so as to prevent the blasting that occurred in the plain paper cone—yes, we got that up to prevent the deformation of the circular form of the cone and to permit a plunger action. By deformation of the circular form of the cone I mean the bottom edge of the cone at rest was supposed to be a circle. When you played it, it would break up into standing waves a certain distance

from the edge on the surface of the cone and with nodes around that like what we call the bell action, and we wanted to stop that because that made tones of its own, as a bell does, and we wanted the device to respond only to the impressed signal, or as near it as we could get practically. I first learned about nodes as a schoolboy.

"XQ. 111. Then I understand you to say that the thing that was in your mind at the time you made that diaphragm up with the ponderous supporting rings, the rim, diaphragm and the conical portion as a combination, what you were aiming at was to stop these blasting sounds which you had noticed in plain conical diaphragms?

"A. That was one of the things. We were doing all of them at once. We had to have something to hold the cone.

"XQ. 112. Was that at all prominent in your mind as the reason for it?

"A. It became very prominent when we began to play them.

"XQ. 113. Had you begun to build it before you filed your patent application?

"A. Oh, yes.

"XQ. 114. Had you heard them play before the Lektophone Corporation against Sylo suit?

"A. Oh, yes.

"XQ. 115. Had you noticed that defect before the case of Lektophone Corporation against the Western Electric Company? Had you or not?

"A. Had I noticed the blasting effect?

"XQ. 116. Yes.

"A. That is a thing that I did when I made the orginal cone.

"XQ. 117. Did you ever use the word 'blasting' either in your patent, the patent application,

in your testimony in the Sylo suit or in your testimony in the Western Electric suit?

"A. I don't know whether I did or not. I don't remember.

"XQ. 118. Did you use that term in any remote way, referring to these diaphragms, in any of those places?

"A. I don't know whether I did or not.

"XQ. 119. Did you in the Sylo case attempt to explain the reason for that rim and rigid clamping provision in any of your devices?

"A. I have never, for very good reasons, attempted to explain the thing at all.

"XQ. 120. That goes for the Western Electric case too, does it?

"A. Yes.

"XQ. 121. In explaining your device to Judge Campbell and to Judge Thacher you held something back, did you, in argument——

"A. —I don't know whether you call it holding it back or not but I did not attempt to involve the thing to the extent that—it was not necessary to say any more than would be necessary for anybody to understand the situation.

"XQ. 122. In arguments with the Patent Office Examiner when your claims were rejected again and again were you familiar with the arguments that were made?

"A. I think I was at the time, most of them.

"XQ. 123. Did you suggest to your counsel the point that buzzing sounds and blasting were prevented by this construction?

"A. Oh, yes, we knew that in the old days. I don't know whether I ever suggested it to anybody or not. I can't remember that far back any particular conversation.

"XQ. 124. Well, did you or did you not mention at any time in your testimony in either of the two suits, Sylo or Western Electric, this effect for which you said in your direct testimony was the reason for the design of this rim diaphragm and ponderous ring?

"A. There was lots said in those suits. I don't remember whether I did or not.

"XQ. 125. Suppose I read you what you said in those suits?

"A. All right; that I can tell you exactly.

"XQ. 126. (Reading): 'When you get a bass tone from the apex of the cone that fundamental wave happens to travel away down near the periphery in a large area. When you get a cone structure and spring applied to the apex'—a spring edge, it is?'

"A. Yes."

By Mr. Darby:

Q. 106. Now XQ. 127——

The Witness: That does not sound like sense.

Mr. Darby: Mr. Davis is checking up my reading.

Mr. Davis: Do you want to follow it or listen?

The Witness: I will listen.

The Court: The witness desires you to read the latter part over again.

Mr. Darby: He read part of the sentence and interrupted to ask you a question, and the part of the sentence was:

"When you get a cone structure and spring applied to the apex"—and he interrupted you and asked——

"A spring edge, it is?"

"A. Yes.

"XQ. 127 (Continues reading): —a spring edge and a ring or an abutment so correlated that all of these frequencies applied to the apex will be damped off that cone from areas you can control by the angle and size and flexibility and all of the other factors, you are dealing with, when you get that condition you can practically reproduce in the art almost perfect reproduction of the original thing. I say almost because I do not like to say perfect, but the ponderable ring on the outside there, the energy travels from the apex down, it stores up in the spring portion, especially in the case of basses, which have been a thing which has been practically almost lacking, it stores up in that spring and bounces back some because some of that wave that went down the cone would probably require a larger cone if it could be made.'

"A. That is true."

You so testified in the Crosley case, didn't you?

A. I think that I did, and I could not do better than that.

XQ. 107. And your recollection now is no better than it was at that time as to what you testified in the Sylo case?

A. Yes.

XQ. 108. And you made no reference to blasting in the Sylo case?

A. I am not sure of that, Mr. Darby. I cannot imagine at this time that a discussion of these devices could have gone through without mentioning "blasting," but if it was not brought up, and it was not necessary to discuss it, why, I do not see why we should have discussed it.

XQ. 109. Then I may make the statement in all good faith, Mr. Hopkins, that you did not mention blasting in either the Sylo case or the direct testimony in the Western Electric case; does that fact surprise you at all?

A. It does surprise me slightly, but——

XQ. 111. Now, I would like to refer for the moment to the testimony that you have given in the other cases, on the size of the diameter of your tympanum, nine-inch minimum size. You have been questioned about that in the other proceedings in which you have testified, have you not?

A. I cannot remember all the testimony. I cannot tell which points I have testified to.

XQ. 112. Now, then, tell us. Let us start anew. You tell us now why you limited yourself to nine inches.

A. I will tell you, and I am only too glad to tell you that, Mr. Darby.

XQ. 113. I will be glad if you would.

A. I think there has been a great deal of misapprehension about that thing. It was an earnest desire of ours to make a disclosure of the best type of device that we knew how to do at that time. That was a long time ago, Mr. Darby.

XQ. 114. What?

A. That was a long time ago, and it was extremely difficult——

XQ. 115. How long ago was it?

A. It was about—I do not remember exactly.

XQ. 116. As far ago as 1913?

A. Before 1913.

XQ. 117. Mr. Hopkins, don't you recall that it was considerably subsequent to 1913 that it was stated that the size of the cone was essential?

A. Oh, yes, it has always been stated that the size was essential, that is, the minimum size, in order to produce an adequate base——

XQ. 118. You misunderstand me. Was it not long subsequent to 1913 that it was advanced by you or for you, that the minimum size of nine inches was essential; I think that is capable of a yes or no answer. Will you give me a yes or no answer to that, please, Mr. Hopkins?

A. I do not remember, at that time——

XQ. 119. That answers my question. Was it not subsequent to 1913; is that your best recollection; was it not subsequent to the time you filed your application for a patent?

A. I am not willing to say that it was after or before the preparation of the application.

XQ. 121. You started to explain when I interrupted, Mr. Hopkins, why the minimum size of nine inches was stated as the minimum size in your patent?

A. Yes, I am very anxious to explain, Mr. Darby; my memory is not sufficient to tell me whether we put that in when we first wrote the specification and when it was filed, or whether it was after, or not. That escapes me at this late date, but I wish to tell you why we put it in. I hope you will bear with me if I try to tell it in my own way.

THE COURT: Go ahead; that is the only way you can tell us.

THE WITNESS: The No. 1 element of the cone which we were talking about a little while ago, which is the cone, and which was the simple cone, as the eminent Mr. Starling and Mr. Cole also found, had this rather startling characteristic as an element of this combination—Messrs. Starling & Cole discovered that it blasted—we will use that term although it had a weaving, waving impression

at the edge, which gave rise to sounds that were not intended to be reproduced, and they seemed to have dropped the thing right there and not attempted any method of getting the good results of the cone without taking them up.

Now, from that day to this, I found it almost impossible to explain to a layman or even to an expert, the characteristics that are inherent in that cone, and when we came to getting a patent, it was a terrible proceeding to differentiate between this cone of that size, that was the element of the combination which we desired to be patented, and all of these other things which did work that way.

Now, it does not seem to have gotten any easier after all these years, and if my memory does not play me false, I personally gave up all hope of trying to explain how this thing worked. We have a great deal more information on it today, and I really believe I have a satisfactory idea of it today, but I did not have an intelligible idea to give them, and the easiest way out of it was to tell the public not to make the cone any smaller than that, or it would not give a result commensurate with the state of the art at that time. That is the explanation.

XQ. 122. Have you stated everything that you want to state now, Mr. Hopkins, as to why——

A. I am sure I do not know, Mr. Darby. There may be other things later.

XQ. 123. Let me finish my question first, and maybe you will know. Have you stated everything that you want to state now, as to why it was stated in your patent that nine inches was the minimum diameter for your cone?

MR. DAVIS: No—for the tympanum.

XQ. 124. Yes, for the tympanum; quite right.

THE COURT: That is, why?

XQ. 125. Why you inserted nine inches as the minimum size for your tympanum?

THE COURT: Yes, if I understand you, you are inquiring by that question—I am not sure that the witness and I have the same meaning from your question, but what I have been looking for all the time, and what I am assuming this question really intends to elicit, is why a mechanism, having a tympanum not less than nine inches in diameter, functioned better in the reproduction of sound than did one less than nine inches in diameter; is that what you are after?

MR. DARBY: No, sir. I think we have covered that subject fully by other evidence. What I am asking this witness specifically is—and I do not want any misunderstanding about it—my specific inquiry is, why? And I want the witness to give every reason he can possibly think of—why nine inches was set out in his patent as the minimum size.

THE COURT: All right.

MR. DARBY: I think I understand your Honor's difficulty, but I cannot help it.

THE COURT: You are entitled to that position.

XQ. 126. Have you advanced every reason now?

A. No, Mr. Darby. I think I would like to augment that by saying that every one was asking then, everyone interested who saw it, including my attorneys, and whether afterwards or before, or when, I do not exactly remember. I am sure that everybody connected with the prosecution in the Patent Office was asking the

very question that his Honor just stated, and I was not——

XQ. 127. Just a minute, Mr. Hopkins. We have passed beyond the question asked by the Court.

XQ. 128. Have you stated everything you want to state, Mr. Hopkins, as to why the size of nine inches is set forth in your patent as the minimum diameter of the tympanum, not only in the specification but in the claims?

A. I had nothing to do with the claims, Mr. Darby.

XQ. 129. You did not, and do not know of any other reason than has been advanced by you on the witness stand here now as to why nine inches was set up as the minimum size?

A. Yes. I told you that below nine inches by careful experiment, we found that the efficiency in the bass ranges was falling off and that we did not believe—that is, nine inches was a rather rough way of putting it—I mean it was a zone there of that size, and below that the basses were not reproduced in what we considered the full amplitude to match the rest of the sound gamut.

XQ. 130. So that in order to get the full amplitude of the sound to match the gap——

A. Not the gap—the gamut.

XQ. 131. You considered a minimum of nine inches essential; is that right?

A. I did not think a minimum was essential, and I am not so sure today that giving any minimum was, and that is just the point I wanted to bring out a few moments ago, but it was so difficult to show people, or to explain to any one what was taking place in that particular element, that would not take place in some small thing that did not do the trick at all; that the easiest way out was to give a minimum below which the public should not make this thing if they expected to get good results.

XQ. 132. I see. You had a great difficulty in ex-ining to people why your cone would do something t a smaller cone would not?

A. I still have.

XQ. 133. All right. Then have you said every-ng now that you care to say as to why the size of ne-inch diameter of tympanum is set forth in your tent as a minimum? I want to get from you every ason that you have.

A. I have not in mind at the moment, but at any ne at all it might arise, that I might want to say re about it.

XQ. 134. No, I would rather have you now.

A. But at the moment I do not think of any reason.

XQ. 135. Well, suppose we take the time right now let you have it, because I want to have you say every-ing you can think of on the subject right now.

A. I am willing to answer any question, but I am t willing to be put in the position of thinking up erything that I might want to say.

XQ. 136. The reason for my putting the question at way, Mr. Hopkins, was because—perhaps I should t say it—I will strike it out. I call your attention page 83 of your testimony in the Western Electric se, the record in the Court of Appeals. You testified follows, didn't you?

"XQ. 213. And when you selected the nine-inch size of your tympanum as the minimum size, that, I assume, was based on your experience in these tests with the phonograph?

"A. That was based on experiments that led up to what we contributed at that time which gives a better result than what was generally known.

"XQ. 214. That is, as applied to the phono-graph art at that time?

"A. Yes, in other words, the ear is the final test, and the human being that owns the ear is going to say whether the thing is good and whether you can sell it, and we could not sell it to them unless they were satisfied.

"Now, we had to arrive at something in that dark age and we did not have very much encouragement from either the Patent Office or anybody else, and it was a mighty difficult proposition and the reason for choosing that size was that we were made to choose it. We did not want to choose it, we were made to choose it by people hollering about a whole lot of little diaphragms that were previously used and did not do this thing.

"Now, we were caused to choose the minimum size. Where there are little diaphragms, which are one thing, and big diaphragms, which are other things, there must be a line of demarcation drawn and we had to draw it, and when we drew it we made that size. We may have cheated ourselves or we may have taken more than was our due."

Was that correct; you testified that way?

A. That sounds right to me except in one particular.

XQ. 137. You testified to that?

A. I think I did. I am not looking at it for a moment——

XQ. 138. I have not asked you a question on it yet.

A. I wish to qualify my answer.

XQ. 139. You wish to change it?

A. No, I do not.

XQ. 140. You wish to qualify it?

A. I want to say that when it said the word "made"——

XQ. 142. Do you want to change or modify that testimony now in this case, Mr. Hopkins?

A. No. I was just about to explain what was ant.

THE COURT: Mr. Darby is giving you an opportunity to do what you were starting to do a minute ago, if you want to.

THE WITNESS: Explain what was meant at that time by that word, your Honor?

THE COURT: Yes, you may add that to your answer, if you so desire, so go ahead.

THE WITNESS: That when I so testified I meant that conditions were such that that was the only way I had of getting out of it without explaining something that I found difficult to explain. I do not mean that I was forced by any proceedings of any kind to give this minimum. It might have gone on forever without being able to explain——

XQ. 143. You certainly do not want to convey e idea that you had been forced by the Patent Office adopt 9 inches, did you?

A. No. I did not want to give the idea that somedy says I must do it. It was simply that in order to fferentiate, we had to arrive at something, and this ing that was already in there, for telling people not make it smaller than that, was as good a way to get t of it as any.

XQ. 144. Mr. Hopkins, let me read you this passge, one sentence, page 83:

"We did not want to choose it, we were made to choose it by people hollering about a whole lot of little diaphragms that were previously used, and did not do this thing."

What people did you mean were hollering about hese little diaphragms?

A. Everybody that wanted a distinction made, one which would do the thing, and the little one that would not.

XQ. 145. And it was furthest from your mind when you testified in this case that it was the Examiner in the Patent Office that was doing this hollering?

A. Amongst other people, the Examiner was one of the people to whom we had to explain this thing, or to differentiate this thing.

XQ. 146. As a matter of fact, he was the only person that you had to differentiate it for, I mean?

A. No, at that time I had a great deal of trouble in explaining what was taking place.

XQ. 147. But the Patent Office was the only one you were trying to get anything from; is that right?

A. At the time we wanted to get a patent. Now I did not prosecute the case——

XQ. 149. I will ask you a question which I think you can answer categorically now, Mr. Hopkins; did not you mean by the testimony that I have just read to you, given by you in the Western Electric case, when you said the 9-inch or that 9 inches was set as the minimum diameter for your tympanum, because you were made to do it by the Examiner in the Patent Office during the prosecution of your patent application?

A. No. I do not know that I was made to do it, or what the Examiner required.

XQ. 150. You mean you do not know it now?

A. No, I do not even know it now, whether the Examiner required any dimensions—made any dimensional requirement whatsoever.

XQ. 151. You have never even reviewed the file wrapper of your patent?

A. No.

XQ. 151a. And having gone through all these litigations and have never reviewed the file wrapper of your application?

A. No. I do not remember having reviewed the file wrapper or I do not remember ever having read the file wrapper at any time.

XQ. 152. And you testified as follows in the Crosley case, didn't you, page 39, second paragraph:

> "As to whether or not the statement in Patent No. 1,271,529—'The base of the central conical portion *l'* of the tympanum should exceed in area one-half of the effective area of the entire tympanum, that is, the area of the aperture in the rims K, K',' is what I meant by my recent testimony—those limitations were put in to distinguish from other things on the ground of size only."

You so testified, didn't you?

A. I think I did.

XQ. 153. And do you want to modify that in any respect?

A. No.

XQ. 154. So that you stand by that testimony in the present case?

A. Unless there is something misleading about it that I did not see at the moment. I am perfectly willing to stand by it.

XQ. 155. You likewise testified in the Crosley case on page 42:

> "When I filed my specification and drawings I was attempting to describe accurately in its minimum dimensions, the very best device that I knew how to make."

Is that correct; did you so testify?

A. I suppose I did, Mr. Darby, but I was trying to—is there anything associated with that statement that would——

XQ. 156. Yes, you can see what it is associated with, referring to bodily movement. Now, Mr. Davis, you might explain to him that the narrative form——

MR. DAVIS: You understand, Mr. Hopkins, that this record has been reduced to narrative form. It is not the exact words that you testified to, but reproduced in narrative form, which is now required by the Courts.

A. I think that is accurate. It might be misleading to say that I was attempting to describe its minimum. I was attempting to describe, and I gave the minimum, which would give the very best device I knew how to make.

XQ. 157. You mentioned celluloid in your patent as one of the elements, possible elements?

A. Yes.

XQ. 158. Is that right?

A. Yes.

XQ. 159. And I think you testified in one of the cases that you read about every bit of printed literature that you could find on the subject in connection with producing this cone device of yours?

A. I think, Mr. Darby, that I said I read everything on the subject of acoustics. I do not ever remember having read anything on the subject of producing cones.

XQ. 160. You read everything, I think your testimony was—I can find it, if necessary—that you read everything on the subject of sound reproduction?

A. Everything that was available around at that time.

XQ. 161. And on reproducing devices?

A. Yes.

XQ. 162. And with your prior experience in the patent profession, I assume that one of the first places

you looked at was in the prior art, the prior patented art; is that right?

A. No. It was not. When I was with Mr. Edison, I was not at all interested in the patented art, and we were more interested in the pure physics.

XQ. 163. The reason I asked that was because I notice that in the earlier Lumiere patent it refers to celluloid as a possible substance, and I was wondering if you read the Lumiere patent before you applied for your patent?

A. I do not remember whether I had read that patent prior to the application, but that was not the reason, Mr. Darby, for the mention of celluloid, because we——

XQ. 164. You are anticipating, Mr. Hopkins. Is celluloid a suitable substance?

A. In a thin sheet, it is possible to use it. It is not very good.

XQ. 165. In your cross-examination, and when you testified on the Western Electric case, on this subject, page 97, you testified:

> "XQ. 281. What are the collodial substances you referred to in your patent No. 1,271,527 at line 66 on page 3, as being suitable for your tympanum?
>
> "A. Paper, fibre, cellulose.
>
> "XQ. 282. Celluloid?
>
> "A. Celluloid is not suitable.
>
> "XQ. 283. Well, is it a collodial substance?
>
> "A. It is a collodial substance."

You so testified, didn't you?

A. I am sure I never heard the word "collodial."

XQ. 166. I presume he meant colloidal. A typographical error; but with colloidal substituted for collodial, I have read it accurately, you so testified, didn't you?

A. I may have.

XQ. 167. You do not question the fact that you did?

A. I did, if there is any question of doubt about it.

XQ. 168. Am I correct in my understanding that you sold your patent to the Lektophone Corporation in return for stock; is that right?

A. Yes.

XQ. 169. And was that a substantial percentage?

A. Yes, I would say so.

XQ. 170. And you still have that percentage?

A. Yes.

XQ. 171. You have never disposed of it?

A. No.

XQ. 172. The Sylo case, you recall, is the first case in which this patent was involved, the one before Judge Campbell?

A. I believe it was.

XQ. 173. I call you attention to the testimony you gave at that time, page 64:

> "XQ. 149. Were you interested in the Lektophone Company at the time?
>
> "A. I do not know whether I was or not. At one time I held an interest in the Lektophone Company which I do not now hold."

You so testified?

A. I think I did.

XQ. 174. You were in error, were you?

A. In some respects, as I remember it then. I was in error because Mr. Davis was taking care of my affairs and I did not know as much about it as he did at that time, and I believe I made several misstatements which were afterwards corrected.

XQ. 175. I see. That testimony given in the case which first went to trial, the record indicates the trial began on November 18, 1925, and in the Western Electric suit, in which the trial began on June 8, 1926, you

were asked the following question on direct examination by Mr. Davis, on page 37:

"Q. 2. What connection have you now with the plaintiff, Lektophone Corporation?

"A. I am a stockholder.

"Q. 3. To what extent?

"A. I believe substantially 5 per cent. I have retained."

You so testified, didn't you?

A. I think I did, yes.

XQ. 176. You were likewise in error on that?

A. I may have been slightly in——

XQ. 177. And the Brandes case was the third case that came up for trial, was it not?

A. I think it was. I do not know whether it was the third or fourth. I am not sure, Mr. Darby.

XQ. 178. In the Crosley case you testified as follows, page 21: "I am a stockholder of the Lektophone Corporation, my stock representing my original interest in the invention." That corresponds with the testimony you have given in this case, does it not?

A. No, I hold a larger interest now than I originally held.

XQ. 179. You have?

A. Yes.

XQ. 180. I rather gained the impression, and perhaps the error was mine, that your present interest in the company was what you acquired by reason of the sale to the company?

A. No, my answer to your question was whether I still had my original interest.

XQ. 181. And what was that original interest?

A. It was somewhere around 5 per cent. I do not remember at the moment.

XQ. 182. Somewhere around 5 per cent.?

A. I think so.

XQ. 183. I call your attention to the testimony that you gave in the Rola case, which I think was the last case. You recall that that was the last case in California?

A. I think it was.

XQ. 184. And that trial was on May 10, 1928, page 113: "My interest in the plaintiff corporation is that I am a stockholder and a licensee. I own part of the stock and I got that for my invention. It is somewhere around 17 per cent." Did you so testify?

A. I think so.

XQ. 185. Which is correct, 17 per cent. or 5 per cent.?

A. Both.

XQ. 186. That you got in return for the invention?

A. For the inventions.

XQ. 187. For the invention of the patent in suit?

A. My interest has been enlarged by the sale of other inventions since.

XQ. 188. You understood my previous question as meaning the invention of the patent in suit, have you not? The remuneration you received for the patent in suit. You say you understood my question in giving your previous answers?

A. Yes, but when you mentioned 16 per cent.——

XQ. 189. 17 per cent.

A. Or 17 per cent., the conditions have changed, because the increase in my holdings has taken place since that time.

XQ. 190. But I call your attention to the fact that in the Rola case you testified: "I own part of the stock and I got that for my invention." What invention were you talking about there?

A. I was probably talking about this one, and if the entire amount of 17 per cent. to which my holdings

had been enlarged was meant then my answer should have been inventions.

XQ. 191. The Lektophone Corporation is not a manufacturing concern, is it?

A. No.

XQ. 192. It is a holding company owning this patent under which it grants licenses to others?

A. Yes.

XQ. 193. And I think that you are connected with a company which is one of the licensees, is that right?

A. Yes. No, I am mistaken there. I am one of the licensees. It is not a company.

XQ. 194. What is the trade name of the brand you make?

A. There was a company called the Titanafram Company which held a Lektophone license with which I was connected. That company I am not longer connected with, but have a license of my own.

XQ. 195. And what was the size of the Titanafram?

A. Various sizes, from twenty-two inches up to five feet.

XQ. 196. As a matter of fact, the minimum size was limited by the license, was it not?

A. Yes.

XQ. 197. What was the minimum size?

A. Twenty-four inches, I believe.

XQ. 198. That is a two-foot diaphragm?

A. No, a two-foot device.

XQ. 199. That twenty-four inches had nothing to do with the tympanum, or the size of the tympanum?

A. The tympanum was the interior part and it was surrounded by sounding boards.

XQ. 200. What I am trying to get at was twenty-four inches the tympanum alone or the tympanum plus the sounding board?

A. The tympanum plus the sounding board.

XQ. 201. About when as near as you can recall did you complete your first structure from which as I understand it the drawings of your patent in suit were made?

A. The drawings of the patent were not made from the first structure, but the structure from which the drawings of the patent were made were completed somewhere about 1911, I believe, but I am not positive about that. 1911 it seems to me——

XQ. 202. Somewhere around there?

A. Yes, somewhere around there.

XQ. 203. And did you show it to Mr. Edison, did you demonstrate it to Mr. Edison?

A. That was not made until quite some time after I had left Mr. Edison.

XQ. 204. Did you ever demonstrate it to Mr. Edison?

A. Not that particular model.

XQ. 205. You had demonstrated one similar to it in so far as the cone structure was concerned?

A. Yes.

XQ. 206. And who else did you demonstrate either one of those to?

A. At the time I demonstrated to Mr. Edison——

XQ. 207. Are you answering my question?

A. I am trying to. There were present a number of people at the Edison laboratory whom I do not remember, but I do remember that Mr. Dyer, the president of the Edison Phonograph Company, was there.

XQ. 208. Mr. Dyer was subsequently the president of the Lektophone Company?

A. Yes, quite some time later.

XQ. 209. And did you try to commercially exploit the device?

A. At that time?

XQ. 210. Yes, any time subsequent to 1910. I would like to have you recite in their order as near as

you can recall everybody that you tried to get interested in this device and demonstrated to them for that purpose?

A. I got Mr. Davis and Mr. Pennie, I got Mr. Pennie interested and then later Mr. Davis and they handled the exploitation proposition for me from then on.

XQ. 211. But you demonstrated it to the Victor, did you not?

A. That was at a time——

XQ. 212. They kept you advised as to who they were demonstrating it to?

A. I went with Mr. Davis.

XQ. 213. And did the Victor people take it up?

A. They had a board of directors' meeting.

XQ. 214. But they did not actually take it up?

A. They considered it——

XQ. 215. Pardon my interruption, Mr. Hopkins?

A. No, they did not take it up.

XQ. 216. Do you know of any other large concerns that you demonstrated it to for the purpose of having them take it up?

A. I am afraid you will have to get the information from Mr. Davis or some of the other members who had that in charge.

XQ. 217. They did not keep you advised as to what was going on?

A. They may have, but my memory does not tell me just what was going on then, because I was not directly connected with it.

XQ. 218. Your memory is faulty in that respect?

A. I would not want to depend on it.

XQ. 219. Can you tell me in general whether or not it is your recollection that effort was made, more or less continuous effort was made, to interest somebody in it?

A. I am quite sure there was.

XQ. 220. And when is the first time that it was actually taken up and incorporated in a commercial structure?

A. The Pathe Company incorporated it in a commercial structure that I became familiar with. I think it might have been before that time, there might have been——

XQ. 221. When did the Pathe people take it up?

A. I cannot tell you.

XQ. 222. You do not know the approximate time?

A. I do not remember those dates.

XQ. 223. Roughly, was it in 1913?

A. I am sure I would hate to try and place it. I have not kept track of those particular dates.

XQ. 224. And your personal connection with the exploitation of the device was severed, I gather from your statement, and you left it entirely in the hands of Mr. Pennie and his firm; is that right?

A. Yes. I engaged in another endeavor at that time——

XQ. 225. You went to work for the Eastman Kodak Company in Rochester?

A. Yes.

XQ. 226. And the next work that you did in connection with this matter was in connection with the Pathe Actuelle?

A. Yes, I think it was at the Pathe factory.

XQ. 227. And you know Mr. Lewis, don't you?

A. Mr. Lewis at the Pathe factory?

XQ. 228. Yes, Frank Lewis.

A. Yes.

XQ. 229. And in what capacity was he employed there?

A. I do not know exactly what his title was but he was the engineer that seemed to be in charge of the designing.

XQ. 230. And you went to work for the Pathe people under Mr. Lewis?

A. No, I was only there to do——

XQ. 231. A special job?

A. A special job.

XQ. 232. They were having some trouble and they wanted to get you to help them out of it?

A. No, I would not say that was it.

XQ. 233. They were having difficulties with this Pathe Actuelle and they employed you because of your knowledge and experience in the art to see if you could help them?

A. With a view of improving it.

XQ. 234. And who was the one who took up with you the question of securing your services with the Pathe people?

A. I do not remember that.

XQ. 235. And perhaps you were not under Mr. Lewis but Mr. Lewis is the man that you came in contact with?

A. He was the man there at that time.

XQ. 236. What was the nature of the trouble that they were having, do you recall?

A. I think at that time that you speak of it had to do with the transmission line to the diaphragm.

XQ. 237. They were having quite a little trouble with the needle digging into the record, don't you recall that?

A. No.

XQ. 238. How long did you stay with the Pathe people?

A. At that time?

XQ. 239. Yes.

A. I do not believe that I was there off and on maybe a month; I was not there continuously at any time.

XQ. 240. Would you dispute the fact that you were there off and on approximately two months?

A. No, it might have been.

XQ. 241. And while you were there, do you recall whether or not the Pathe people had a standard form of card that they sent out to their customers who had purchased Pathe Actuelles?

A. I never heard of such a thing.

XQ. 242. And you did not see such a card and Mr. Lewis did not show you any such card?

A. I do not believe he did. I do not remember it.

XQ. 243. Made out in a form to indicate, and maybe this will refresh your recollection, made out to be sent to customers who complained about the Actuelle so that they could point out on the card the nature of the trouble?

A. Never heard of it before.

XQ. 244. Or any card of that nature?

A. Not within my memory.

XQ. 245. And you have no recollection of Mr. Lewis showing you such a card?

A. None whatever.

XQ. 246. Then at the end of a month or two, or two months, you severed your connection with the Pathe Company, is that right?

A. I did not have any connection with them other than going there to do that special work.

XQ. 247. You got paid for it?

A. And it lasted, it might have lasted a month or six weeks or two months. At the present time I am unable to say.

XQ. 248. You got paid for it did you not?

A. Yes.

XQ. 249. $50 a week?

A. It may have been. I do not remember what it was. There were just some charges that I made.

XQ. 251. Did Mr. Lewis after you severed your nection with the Pathe Company, show you, if you recall, a metal frame with a specially designed unit t he had gotten up as a loud speaker; do you re- l that?

A. No, I do not.

XQ. 252. Do you recall that after that time you re experimenting with a horn for use in connection h a loud speaker?

A. Oh, yes, after that lots of horns since then.

XQ. 253. In developing a loud speaker for radio, s it not?

A. Well, the horn that I think you are speaking out was used for radio. It was never a commer- al device. I mean it was not a manufactured device.

XQ. 254. But you were experimenting with a horn r that purpose?

A. I was experimenting with a very large type f horn.

XQ. 255. You also testified in the Brandes suit, d you not, Mr. Hopkins?

A. Yes, sir.

XQ. 256. I show you Defendant's Exhibit C for dentification, did you examine a structure similar to is in that case?

A. Yes.

XQ. 257. And you testified concerning it?

A. Yes.

XQ. 258. I call your attention to the testimony in e cross-examination concerning the rubber rim in e Brandes device. It is at page 174:

"RXQ. 278. But so far as it stored as flexure of the rubber it would have the effect of the spring?

"A. Exactly.

"RXQ. 279. And the energy being returned from the storage would tend to help the reversal of the movement of the cone?

"A. Yes, sir.

"RXQ. 280. Exactly like Mr. Scull's spring?

"A. Yes, sir.

"RXQ. 281. Now, when you fastened the outer edge of that rubber to the ring so that it has to stand still, you got more of an abutment?

"A. Yes, that aids it clear out.

"RXQ. 282. And consequently you have one edge of the rim standing still while the other edge moves?

"A. Yes.

"RXQ. 283. And the rubber in between acts as a spring?

"A. Yes.

"RXQ. 284. My understanding of your statements is that they are all predicated on the idea that the rubber which we use is elastic.

"A. I should hope so.

"RXQ. 285. Do you mean to say that it has the property of elasticity?

"A. It has.

"RXQ. 286. And you think it has elasticity in the form in which we have it there?

"A. Yes, sir."

You so testified, did you not, Mr. Hopkins?

A. Yes.

XQ. 259. You do not want to change that testimony now, do you?

A. No.

XQ. 260. Mr. Hopkins, I will read to you the testimony that you gave in question and answer form in the Crosley record, page 80:

"XQ. 86. In connection with the Edison work I understand that you are absolutely sold on the size, shape, and mounting construction of those diaphragms, and also on the material, that paper, for the use of the diaphragm?

"A. Well, I would not say that. The size would probably never have been talked about much if it had not been for the fact that we had an existing standard of the sound box and horn in those days and no matter how much you improved the quality, if you could not get the volume that the phonograph made, then you were not in the running and you had not made an improvement. Now, there was another reason for size having anything to do with it at all. In the sound box we had a diaphragm held at the edges and many forms of diaphragms in sound boxes. Some of them are rounded up, some of these are coned up and some of them look very much like these only they were small and operated on a confined body in the sound box. Of course, looking at it now it would look differently but we figured we had to differentiate from the small diaphragm used in a sound box and in the Patent Office it was necessary to get away from that.

"XQ. 87. To do what?

"A. It was necessary to get away from having the big diaphragm which had the characteristically new way of working from a diaphragm that looked just like it but was small and worked in the sound box against a confined body of air."

You so testified?

A. Yes.

XQ. 261. And do you wish to change that or modify it?

A. No.

XQ. 262. And in the Brandes case, page 58, you testified as follows:

"XQ. 203. No, please do not argue with me. I will try to ask the question as briefly as I can and you answer as briefly as you can and we will get along faster. Now this wrinkling is due to what, in relation to the width of the rubber from the edge of the mouth to the edge of the cone? Why is it wrinkled? Is it because it is under a tension or because it is slack?"

He was referring, you will recall, to the rubber rim of the Brandes cone.

"A. Because it is flabby.

"XQ. 204. Is it because it is tensioned or because it is slack?

"A. It is because it is slack in places, some places more than others.

"XQ. 205. Is it not slack entirely around P-6?

"A. It is not slack over there.

"XQ. 206. To what extent?

"A. About an inch.

"XQ. 207. At any other place where you find that it is not slack?

"A. It is not slack up there."

You were pointing out, were you not, various portions in the periphery in the Brandes cone that you had under inspection, places where the rubber was not slack?

A. Yes.

"XQ. 208. To what extent is this last lack of slackness, over how much of the circumference?

"A. It seems to be pulled down to the cone at that point in a vertical zone about one-quarter of an inch wide.

"XQ. 209. At the top and bottom the slackness is quite pronounced?

"A. It seems to be immediately at the top and at the bottom. At another point it is pulled down."

You pointed to a still different point again on the cone, do you recall?

A. I think so.

XQ. 264. You so testified in that case, did you not?

A. I did.

XQ. 265. And the testimony that I read correctly refers to the Brandes cone that you had under consideration?

A. Yes.

XQ. 266. And of course a thin piece of rubber is more readily vibrated if it is under a tension than if it is wrinkled up, slack, is it not, as a matter of acoustics?

A. I do not see what a thin piece of rubber has to do with acoustics.

XQ. 267. Will you answer my question?

A. I do not know. I do not know whether it is more readily vibrated. Did I understand you to say that it was more readily vibrated if it is tight?

XQ. 268. Yes, than if it was just slack and flabby.

A. That question is kind of difficult. I imagine it may be.

XQ. 269. You were unable to tell me a little while ago as to when the Pathe people first came on the commercial market?

MR. DAVIS: I can give that date if all that Mr. Darby wants is the date.

MR. DARBY: Mr. Hopkins gave the date in the testimony of the Western Electric Company from

a written record, the last quarter of 1918. Is that correct?

MR. DAVIS: Yes.

By MR. DARBY:

XQ. 270. And you did not design the cone used by the Pathe people, did you?

A. No, sir.

XQ. 271. On the question of confined air, I call your attention to the testimony you gave in the Sylo case, page 54. You stated as part of your answer to Q. 75:

> "If you have got any confined body of air or semi-confined body of air present in the loud speaker anywhere, you are going right back to the horn that we talked about yesterday."

That was your testimony, was it not?

A. I think so.

XQ. 272. And you do not want to change or modify that?

A. No.

XQ. 273. And the horn that you spoke about "yesterday," as referred to in the testimony I read you, referred to the sound box horn construction with the phonograph?

A. Sound box and horn.

XQ. 274. And in the Western Electric case, referring to the same subject, you stated, middle of page 40:

> "In other words I could not carry beyond that point, beyond the distorted point and get a satisfactory result until I finally came to the conclusion that it was the confined character of the air in this system that was responsible for it, and I made up my mind that the high pressure necessarily produced in the sound box and let loose in the throat of the horn were responsible for it altogether, with

the necessity for using the horn as a transformer to let down these pressures."

You so testified?

A. I think so.

XQ. 275. And you were testifying concerning the disadvantages of sound box and horn structures?

A. Yes, the things that produce resonances.

XQ. 276. And you do not desire to change or modify that testimony, do you?

A. No.

XQ. 277. Again on page 75 of the Western Electric record:

"XQ. 163. I understand from your testimony, in your patent, that in the old sound box art of which this Exhibit 6 is a sample, the air was confined between the diaphragm and the back of the sound box?

"A. That depends entirely on how big a hole there is in the sound box, how much space there is where the air is so confined.

"XQ. 164. In other words, when in your patent you refer to the confined air there, you use that in the relative sense, I assume?

"A. Oh, well, I use it in the fact that there is an enclosure in which the air that is being operated on is surrounded by walls.

"XQ. 165. And my understanding of the operation of a sound box of this sort is that the air in that enclosure is continually moving in and out of the opening at the back of the surface?

"A. Well, that is questionable, how much it moves in and out; it may act just as a cushion, the part that is near the hole and the edge is more likely to act as a cushion. There is probably very little movement in and out of that hole."

Is that your testimony in that case?

A. Yes.

XQ. 278. And you see no reason to change it now?

A. No.

XQ. 279. Then on the question of bodily movement you stated at page 87, in answer to XQ. 236:

"At that time in those dark ages before we went into the refined experiment, which, by the way, did not lead very far in this art, it did not matter. We discovered the remarkable result that you could get from a cone mounted in this way; now, apparently to your hand that part which you held in your hand of that thing, it will move bodily. That was what was meant by the use of the word 'bodily.'

"XQ. 237. And your idea at that time was that you were constructing this cone so that it would be so rigid that it would not have these waves in it; was that not right?

"A. So that it would not have an obvious breaking up, which would happen if you made the thing too flimsy.

"XQ. 238. Are you trying in your testimony here to change the statement in your specification; I am reading from page——

"A. No, I am trying to tell you what it meant at that time.

"XQ. 239. Yes, all right, let me finish. I call your attention to the statement on page 2, line 112, where you said that: 'The conical shape is given the tympanum so that the shock or vibration impressed upon the apex of the cone in a direction toward the base will move the whole cone bodily, the strain being imparted edgewise of the material and no wave motions being set up in the thin material of the cone——'

"A. Yes.

"XQ. 240. (Continuing.) —'the curvature of the walls of the cone precludes the setting up of waves in the material, and the intended object, a simultaneous movement of the whole conical portion of the tympanum, is best attained.'

"Now do I understand from your testimony that you are trying to change that statement?

"A. No.

"XQ. 241. You agree with it still?

"A. Yes. I was just trying to tell you what it meant, the use of those particular words meant, at that time, why we used those words. You have to use something to express yourself.

"XQ. 242."

MR. DAVIS: I think you ought to put in what the witness said.

XQ. 280.

"MR. SCULL: Well, some of you use a lot of words to do that.

"THE WITNESS: I know, in this art especially, but that was the best we could do at the time.

"XQ. 242. When did you commence to get the idea that this language about the bodily movement of the cone did not mean the same thing today as it did back in 1913?

"A. Why, after people infringed us and began to tell us about it."

Do you recall testifying about that?

A. Yes.

XQ. 281. Do you desire to change your testimony now in any way?

A. No.

"XQ. 243. In other words, when you commenced a study of the so-called infringements, then you began to perceive that this language did not apply to your invention; is that right?

"A. No, the other people were trying to tell us that that language did not mean what we said it did; that is the first time that I ever paid much attention to it, if that is your question.

"XQ. 244. I call your attention to the fact that in a patent granted to Marcus C. Hopkins, No. 1,390,206, which was filed June 7, 1920, and granted September 16, 1921, you—and I assume that you are the Marcus C. Hopkins of that patent——

"A. May I see the patent? Yes, I think I read that.

"XQ. 245. That shows what I presume to be an 'Actuelle' diaphragm; is that correct?

"A. Yes.

"XQ. 246. And you stated 'that the vibrations to which the transmission element is subjected are exerted upon the diaphragm, which is thereby caused to vibrate piston fashion——'

"A. Yes.

"XQ. 247. Is that correct?

"A. Yes.

"XQ. 248. And that meant bodily movement, did it not?

"A. No, it meant piston fashion.

"XQ. 249. Does a piston vibrate in any other way than bodily?

"A. Some pistons move as a diaphragm in flex, and some pistons move bodily or wholly, I should say, forward and back.

"XQ. You are an engineer, are you not, Mr. Hopkins?

"A. In a way.

"XQ. 251. If anybody described to you a piston——

"A. Yes.

"XQ. 252. Would you think of a diaphragm clamped on its edge?

"A. No.

"XQ. 253. You meant one that would be free, that could move bodily, like a piston in a steam cylinder?

"A. Yes, but I would not think for a minute that I meant by bodily that there was no bending at all, even in the case of an iron piston that moved up and down in a cylinder. If I understand you, and I want to answer your question correctly, there is a giving at the edges; is that what you mean? So that the whole thing can be moved, or it looks as if it is all moving at once?

"XQ. 254. I do not know what structure you are talking about now——

"A. Well, it was that asking whether that diaphragm moved in that way?

"XQ. 255. That diaphragm, meaning the diaphragm of the Patent No. 1,390,206 which I showed you?

"A. Yes."

XQ. 282. You so testified to that effect?

A. I think so.

XQ. 283. And you do not desire to modify or change that testimony in any way?

A. I do not see any reason to, no.

XQ. 283a. And on page 40 of the record on appeal in the Crosley case appears the following, with reference to the sand patterns; I believe you stated:

"The nodes and loops are not effective playing waves; they are not only not effective, but they

are destructive in producing tones and signals not applied t[illegible]pex."

You so testified?

A. Yes.

XQ. 285. And that is your testimony here?

A. Yes.

XQ. 286. You have no desire to change or modify it?

A. No.

MR. DAVIS: May it appear that the testimony had to do with the circular waves? The sentence immediately before says——

MR. DARBY: Yes, I will make it perfectly clear and put that in, if you desire, Mr. Davis, making the entire question read as follows:

"These circular waves while we did not describe them in whole, we allowed the terms to be expressed in the terms moving the cone bodily and really the effective playing waves, the nodes and loops are not effective plain waves; they are not only not effective, but destructive in producing tones and signals not applied to the apex."

Do you desire to change that?

A. I do not see any reason for modifying it. It is a little bit involved, but it seems to me to mean what I was trying to say.

XQ. 287. You are the patentee named in this Canadian Patent No. 266,936, granted December 21, 1926, on an application filed March 9, 1926, are you not?

A. Yes.

XQ. 288. And you are likewise the patentee of Canadian Patent No. 266,934, granted December 21, 1926, on an application filed March 9, 1926, are you not?

A. Yes.

XQ. 289. And the statements contained in the specifications of that patent are true to the best of your knowledge and belief at the time you executed the oath for them?

A. I think so, yes.

(Patent No. 266,936 to Hopkins received in evidence and marked "Defendant's Exhibit No. 43.")

(Patent No. 266,934 to Hopkins received in evidence and marked "Defendant's Exhibit No. 44.")

RE-DIRECT EXAMINATION.

RDQ. 290. Mr. Hopkins, in the testimony that was read last by Mr. Darby from the Crosley case, in which you said it was somewhat involved, reference was made to nodes and loops which you said there was not effective plain waves; can you tell us what nodes and loops were referred to, and tell us in the language that has been used in this trial, so as to identify them?

A. They are the nodes and loops made by the circumferential wave.

RDQ. 291. That is, the radial nodes?

A. Which go around and make what has been called——

RDQ. 291a. The radial nodes?

A. They make radial nodes, yes, but those vibrations have been called——

THE COURT: Parasitical waves?

THE WITNESS: Parasitic; yes, sir.

RDQ. 292. And the circular waves which you referred to in the Crosley testimony, and which you called the really effective playing waves, will you identify them in the language that we have used here?

A. That is the flexures produces by the application of the energy at the apex of the cone that is produced by the time element as a run down the cone towards the circumference.

RDQ. 293. And that has been referred to in this case as radial waves?

A. Yes.

RDQ. 294. With circular nodes?

A. Yes, radial waves, because they run in a radial direction.

RDQ. 295. Put your mind for a minute on this license that you have from the Lektophone Corporation. You have a license from the Lektophone Corporation under the patent here in suit; is that right?

A. Yes.

RDQ. 296. Is that license limited in the size of the device that you can build under it?

A. No.

RDQ. 297. And you have some other license, have you, which refers to a twenty-four-inch limit?

A. Yes; that is a license from another company on another invention, a later development, which is based upon the invention. In other words, the subject of the invention in suit.

RDQ. 298. That is the second license is under one of your patents for a later invention but from another company?

A. Yes.

RDQ. 299. And in that license how does the 24-inch limit come in?

THE COURT: That license is from the Lektophone Corporation, is it not?

THE WITNESS: No.

THE COURT: I thought it was the license from the Lektophone to a company in which you were interested and had a personal license, but it was

from another company to a company in which you have some interest?

THE WITNESS: I have a Lektophone license, and then I have another license to another invention.

THE COURT: You personally have?

THE WITNESS: Yes.

MR. DAVIS: May I state the whole situation, your Honor, and make it clear?

THE COURT: Yes.

MR. DAVIS: Mr. Darby, in his cross-examination, brought out this matter of twenty-four inches.

THE COURT: Yes.

MR. DAVIS: And the record will show, I think, that Mr. Hopkins said he had a license from Lektophone that restricted him to making things under twenty-four inches. I understood that Mr. Hopkins had an unlimited license, and the company in which he was interested, had a license to manufacture devices having a diameter an over-all diameter of not less than twenty-four inches. The thing is very much confused. Is there any objection to my stating the facts?

MR. DARBY: None at all. I would like to have them stated.

MR. DAVIS: The facts are these. There was a license granted by Lektophone under all its patents to this Titanafram Corporation. During his connection with that Titanafram Corporation, Mr. Hopkins made some other inventions which he assigned to another company. Those inventions had to do with this so-called Titanafram which was a

titanic loud speaker of this cone type. Then subsequently the Titanafram Corporation was sold out and this license was given from Lektophone to Hopkins personally. Then Hopkins got from this other company to whom he had assigned this second invention, an exclusive license under the second invention, for all sizes over twenty-four inches in diameter, so as to protect him in his Titanafram, which was a large device.

THE COURT: All right, Mr. Darby?

MR. DARBY: Yes, sir.

THE COURT: Does that correspond with the facts, Mr. Hopkins, as you understand them?

THE WITNESS: Yes, sir.

THE COURT: All right.

RDQ. 299a. Now, Mr. Hopkins, I direct your attention to the specification of your patent, No. 1,271,529, where it says that if satisfactory regeneration of sounds are to be had, the whole diameter of the tympanum should exceed nine inches and that the base of the central conical portion should exceed in area one-half the effective area of the entire tympanum; and I ask you to tell us what technical reason there was, if any, for putting that statement in the patent?

A. The technical reason was to advise the public not to make the diaphragm any smaller than that minimum thing, or it would not cover the musical range.

RDQ. 300. No. I do not think you understand me, Mr. Hopkins. I want to know why it would not cover the musical range unless it was made of that size?

A. Unless you made it that—unless you made it that size, it would not play efficiently the proper quantity of bass to go with the other frequencies to complete the gamut.

RDQ. 301. And you had determined that by your periments?

A. Yes. By a long series of experiments.

RDQ. 302. Mr. Hopkins, in order that we may re something concrete to think about, when you con- ve of a tympanum made according to the patent, which the over-all diameter of the tympanum is nine hes, and in which the basal diameter of the cone oc- pies half the area, that is, the basal diameter being 6 inches—now, have that in mind, and tell me what fect it would have, according to your experience, if, ther things being equal, you reduced the size of that ire structure; that is, what acoustical effect would have?

A. I think I can answer that, just as I answered a oment ago. We had discovered by experiments that rthing smaller than, roughly this minimum size of e structure that we gave in the specification, would t play the bass end of the sound spectrum of a sical range that we were after——

RDQ. 303. Do you think that is still true?

A. Yes. I think now we could express it very ch better and I think I could probably clarify the rmation by explaining more plainly how this thing rks, but I do not know that that is what you are ask- g me.

RDQ. 304. I would like to have you do it, but I uld like to have you answer a few questions first, so at we can cover the whole thing at once. I ask you st do you still think that as a matter of acoustics one smaller than that is too small to effectively re- oduce the entire gamut of the sounds?

A. Yes, I do. Of course, that limit was just an bitrary limit, it is a little one side or the other, but still believe that that is substantially correct, as near s you can expect it.

THE COURT: I would like to know whether h means arbitrary limit or whether he used the wor "arbitrary" not meaning arbitrary, or whether he has given it its usual meaning?

THE WITNESS: It is not critical.

By THE COURT:

Q. 305. But is it one of degree only? Do not answer that hastily. Is there a point at or approximately at nine inches where the operation of the device changes?

A. It is the point where the effective combinatio of the bass waves becomes noticeable in falling off.

Q. 306. I am wondering whether you could hav made that ten inches instead of nine, whether it would have been equally true at ten inches as it is at nine?

A. I do not think that if you made it ten inches I do not think it would have been near enough th minimum limit. I think nine inches was about as clos as we could get in inches.

Q. 307. In order that the public might have som guide, you saw fit to mention it in size rather than i complicated terms of function or terms of complicated function?

A. I did not have the terms within my ability. I doubt if I have got them yet.

By MR. DAVIS:

RDQ. 308. Mr. Hopkins, still thinking of th structure in which the over-all diameter is nine inche and the cone occupies half the area, and thinking of i made of paper, what would be the effect of reducin the width of the rim and so the over-all diameter, bu retaining the same 6.36 diameter of cone base?

A. As I said in the patent, if you put concentri corrugations in the rim you can increase the resilienc

narrower rim and of course that would reduce over-all diameter of that same machine.

RDQ. 309. Suppose you made the rim of a more ble material?

A. Then the reduction would depend upon the sible narrowing of that rim by using more flexible erial.

RDQ. 310. Then you would still have the conical a the same?

A. Yes.

RDQ. 311. In other words, am I right, if you intain the same conical area and substitute for the per rim a rim of more flexible material, you can use en a narrower rim of the more flexible material and t the same acoustical effect?

A. And make a close approximation to the same sult.

RDQ. 312. Mr. Hopkins, when Mr. Darby was king you a question, I think it was about Mr. Edi-n's laboratory, he interrupted you. If you have rything you wanted to say about it that you think important here, go ahead and say it. If you do t think it is important, please do not say it.

A. I am not sure just what you mean by Mr. Edi-n's laboratory. I do not remember just exactly what was. I have something I would like to say to the urt.

THE COURT: All right.

THE WITNESS: I would like to explain to your Honor, and this is technical, and it has been gleaned since those early days, in the early days—this has nothing to do with the patent——

MR. DARBY: I object.

MR. DAVIS: I think Mr. Hopkins means there is nothing said about it in the patent specification.

THE COURT: Do you mean it has something to do with the functioning of the device described in the patent?

THE WITNESS: Yes.

THE COURT: All right.

THE WITNESS: And particularly with the first element of the cone. In the testimony I think it will be found that when we began to use the cone as an engineering device to get stiffness, we found an unexepected result. In other words, that cone worked better than what would be expected of a thing that had stiffness.

THE COURT: In that form?

THE WITNESS: Or in any form. It was better than we ever expected it to work. Unquestionably it had a mode of operation different from what we expected and it was that thing working with that mode of operation that we combined with a support and a means for suppressing some of its objectionable features.

Putting the paper, which was a vibratile material, and if it was vibratile it could bend, and a lot of stresses on it, the fact that a thing is moving all at once is quite impossible, but surely a thing that is made out of vibratile material, if you smack it on the end it will take a little time for the energy to run down to the other end, and in running down it cannot help but make a wave, but unfortunately it also bends and sets up these parasitic waves as Messrs. Starling & Cole found out. Probably it was prior to my time and I did not know about it at the time.

A bodily movement of the cone—of course there are times when you put a lot of energy on it, when you move the cone from place to place

even an effective sized cone can be moved from place to place and get bodily movement.

THE COURT: I do not understand that.

THE WITNESS: If you apply enough energy the whole cone will move bodily. We always termed the application of the power as bodily movement before we got into the legal phase of the thing. We call this bodily movement and we called the wave motion as an impression on the air, and unconsciously we always used those terms.

That did not mean that there was not any wave motion in vibratile material when you hit it on the apex. There must be. It precludes any such conception of that term.

Really, looking at it theoretically, if we had a cone that moved bodily it did not have a bit of resiliency in it and therefore it did not have the ability to have waves set up in it. If we had such a cone and we reciprocated it and it was applied on its surface, its movement was impressed on the air to make sound waves. Every square inch of that cone would impress the same amount of energy onto the air.

At the same time that is not true. All of the energy is applied at the apex. It must flow to the outer edge and as the energy flows it is really a bend or wave in the cone running from the apex down to the edge. It goes in a wave and there is a time element in it.

Because it goes in a wave and its energy is being damped off all the time by the energy flowing down to the edge, because it goes in a wave, it can let off any amount of energy that happens to be there. If you have a very high vibration it will be damped off right near the apex. It does

not need much area to damp that off, and the energy is expired.

The energy in the bass notes requires a large area. That continues in the paper in the form of a wave down towards the edge and gets the movement of the whole cone encountered so that it is damped off into a large area there.

The development of musical instruments shows very prettily what is necessary. You take a definite amount of energy available, a fellow blowing a horn, if he is blowing in the upper ranges he will blow on a little cornet with a horn that big. It has been developed by practice, and they found that he can blow all the energy on the air that he can, but if you go into the low ranges he has a horn as big as that (indicating) and he has only got the same amount of energy to blow it with. But he has got to put it on a large body of air in order to get the loudness of that energy at that low frequency. The air does not take a little frequency wave from a small surface.

The "Leviathan" whistle is not the size of a policeman's whistle. The policeman's whistle is not of the same frequency——

MR. DARBY: I do not know just exactly what place this statement, or argument, or what you want to call it—it is a voluntary statement of the witness, which is the proper name for it—will have in the record or in the case.

THE COURT: It is a voluntary statement on behalf of the patentee.

MR. DARBY: But it is not in response to any question.

THE COURT: No. Is it your desire that it be stricken from the record, is that your motion?

MR. DARBY: Yes, sir. I think we are going pretty far afield. I assume Mr. Davis has covered all the ground by proper questions that he intended to cover.

THE COURT: What have you to say, Mr. Davis? This is re-experting.

MR. DAVIS: What I have to say about it is this. Mr. Hopkins was asked by me, ineffectively I am sure, to say what was the relation of size to this discussion. I am conscious of not having directed my questions in such a way as to bring out what he really had in his mind.

THE COURT: You consider that as a supplementary or further answer to that question?

MR. DAVIS: Yes.

THE COURT: That gives it a legal status.

RE-CROSS-EXAMINATION.

By MR. DARBY:

RXQ. 313. You stated that using this cone you obtained unexpected results. What was unexpected about it?

A. It was far more efficient over the whole range especially the lower end of the range than I believed we had a right to expect from the structure.

RXQ. 314. Then its efficiency over the audible range is the unexpected result that you obtained?

A. Yes.

THE COURT: Over a wider audible range?

MR. DARBY: Over the audible range. I made it as broad as possible.

RXQ. 315. And were you familiar with prior use of paper cones?

A. No, not at the time I did this work.

RXQ. 316. How do you know that Starling and Cole found flexing? Is there anything in their article about it?

A. Yes.

RXQ. 317. Where?

A. In the article.

RXQ. 318. Point it out to me.

A. I will try to find it for you. I will have to look that up and I do not want to waste time.

RXQ. 319. It will only take you a minute, and I do not think you will find anything in there about it, Mr. Hopkins.

A. In this article they say that they make it flutter and make the extraneous noises. Is that what you meant by your question?

RXQ. 321. Is a nine-inch cone better than an eight-inch cone?

A. Are you speaking of a nine-inch tympanum?

RXQ. 322. Yes, a nine-inch tympanum.

A. I think it is better.

RXQ. 323. Is it better than an 8½-inch tympanum?

A. I think it is.

RXQ. 324. Is an 8½-inch tympanum better than an 8-inch tympanum?

A. It is, yes.

RXQ. 325. Is the eight-inch better than the seven-inch?

A. Yes.

RXQ. 326. Seven-inch better than a six-inch?

A. Yes, and all the way up.

RXQ. 327. All the way down. I am going down.

A. You are going up in the high frequencies. It is cutting off the basses all the time.

RXQ. 328. And the ten-inch is better than the nine-inch?

A. Yes.

RXQ. 329. And eleven-inch better than ten-inch?

A. Yes.

RXQ. 330. And the twelve-inch better than the eleven-inch?

A. Yes.

RXQ. 331. And so on all the way down?

A. I do not know what you mean by down. I will say up to about 17 when it goes the other way.

RXQ. 332. I tried to use your own terminology. And as you increase the size, each increase in the size of the tympanum makes a better loud speaker than the one one inch smaller?

A. Up until about 17 inches when it goes the other way.

RXQ. 333. Up to 17 inches?

A. Yes.

RXQ. 334. Consequently where is there a critical change, or is there a critical change?

THE COURT: Other than at 17 inches.

MR. DARBY: Other than at 17 inches, yes.

A. There is not any critical change anywhere.

By THE COURT:

Q. 335. Even at 17 inches?

A. At 17 inches, your Honor, it has been improving all the time in volume. At 17 inches we find that we have not had any material that will go with that that will not get lacking in stiffness without getting too heavy over 17 inches. I am only speaking now of the results of actual experiment that we have not found what we would call real improvement above 17 inches.

THE COURT: Is it your understanding at this time that there is no critical size; that 9 inches might as well have been 10 or 9½ or 8 or 7½?

THE WITNESS: No. Down the other way, I do not mean to convey that idea.

MR. DAVIS: What he said, if your Honor please, as I understand it, is, in his opinion, and we are talking about the tympanum now, and I assume that the question implied that you were reducing the thing as you would reduce it for the photographic apparatus over-all——

MR. DARBY: Yes.

MR. DAVIS: Mr. Hopkins said that if you reduced the whole thing to 8 inches, it would lose the basses progressively as it went down in size.

THE WITNESS: I was asked whether a bigger one was better than a smaller one.

MR. DAVIS: Yes and he thought it was, and he thought it got better it went up in size until it got to about 17 inches; did that mean over-all 17 inches?

THE WITNESS: Yes, around 17 inches; it is not critical.

MR. DAVIS: Up above 17 inches over-all, there was no further improvement.

THE COURT: I am lost, Mr. Davis, for a minute. I thought awhile ago, although the witness did use the term that it was an arbitrary size, I thought that another time he said there was the change, or marked difference there, that was otherwise than one of degree, namely, a 9-inch tympanum.

THE WITNESS: Quality.

THE COURT: But the quality, as I understand now, changes there only by degree, and that there is an increase of bass, a great deal of increase of bass that makes no marked change at 9 inches but that runs all

the way up from 3 inches to 17, without any marked change in bass, save that of degree.

MR. DAVIS: May I say what I think the witness actually said?

THE COURT: All right.

MR. DARBY: Is there any question about what the witness actually said?

THE COURT: No, there is not.

MR. DARBY: All right.

THE COURT: So I think Mr. Darby is right unless the case is rested on both sides.

MR. DAVIS: I would like to have an opportunity to answer your Honor's suggestion, but not in the presence of the witness.

THE COURT: Are you through with the witness on both sides?

MR. DARBY: I am through if Mr. Davis is.

MR. DAVIS: I have something.

THE COURT: Then do not let me disturb you.

MR. DAVIS: The only thing I wanted to ask Mr. Hopkins was, whether the sizes that he had mentioned contemplated the reduction of all the dimensions of every part, or an increase of the dimensions of every part, and it is understood he did mean that.

THE COURT: Yes.

STIPULATION AS TO CONDENSED RECORD.

(Filed March 4, 1930.)

And now, to-wit, this twenty-eighth day of February, A. D. 1930, it is stipulated by and between counsel for the respective parties to the above entitled cause, subject to the approval of the court, that the foregoing transcript of record of proceedings at the trial of said cause, in condensed form, the testimony of witnesses being stated only in narrative form, save that in preparing said record the part of the testimony desired by the respective parties to be reproduced in the exact words of the witnesses has been left in question and answer form, shall be treated and considered as the record of the trial of said cause, in making up the transcript of record on appeal.

(Sgd.) PENNIE, DAVIS, MARVIN & EDMONDS,
Solicitors for Plaintiff.

(Sgd.) SAMUEL E. DARBY, JR.,
Solicitor for Defendant.

ORDER APPROVING CONDENSED RECORD.

(Filed March 4, 1930.)

And now, to-wit, this fourth day of March, A. D. 1930, upon reading and considering the foregoing stipulation, it is, upon motion of William H. Foulk, Esq., solicitor for defendant,

ORDERED by the Court that the foregoing condensed statement of the record of proceedings at the trial of said cause, to be incorporated in the transcript of record on appeal, be and hereby is approved.

(Sgd.) HUGH M. MORRIS, *J.*

EXHIBITS

PLAINTIFF'S EXHIBIT No. 1.

390

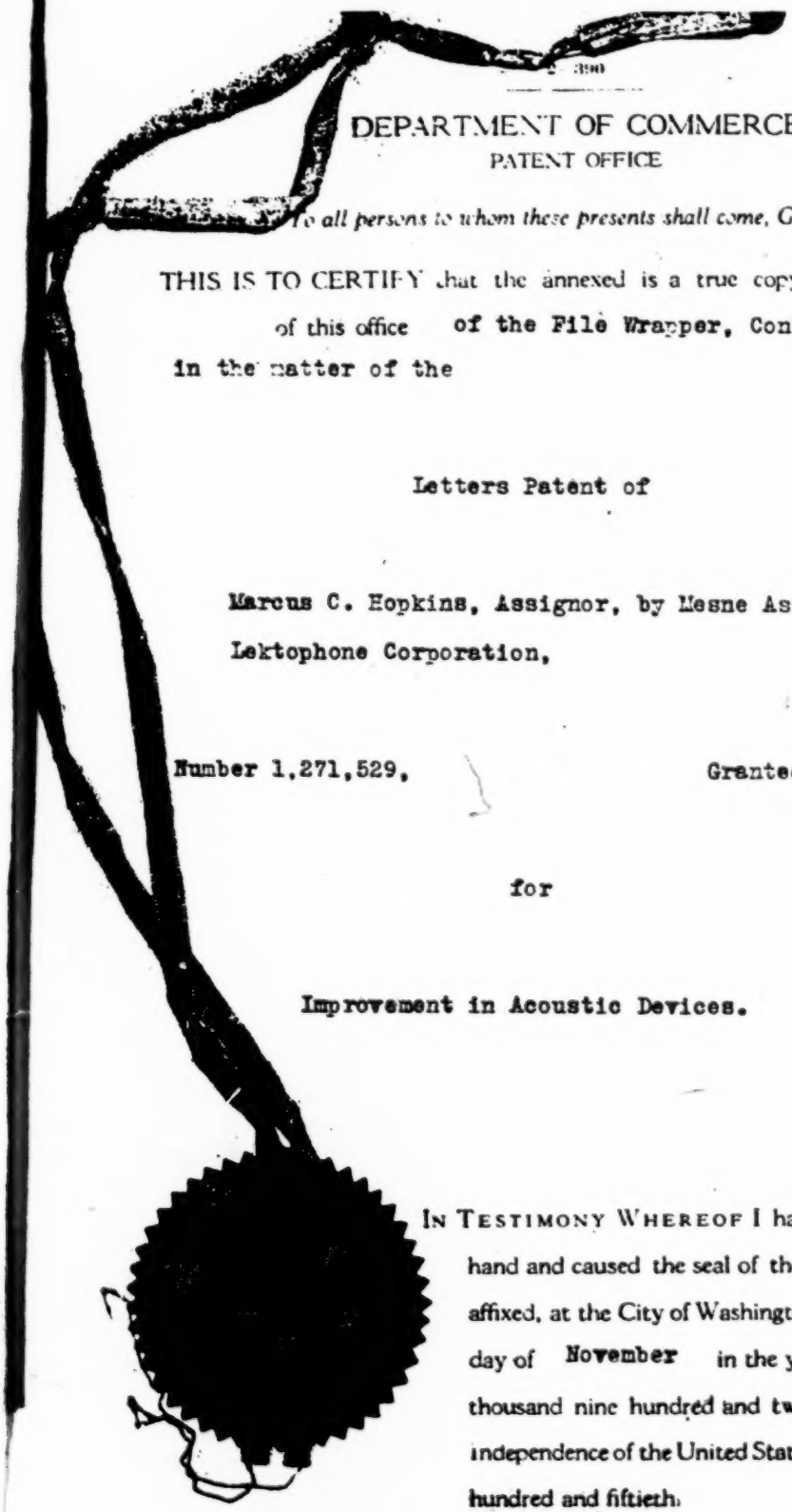

DEPARTMENT OF COMMERCE

PATENT OFFICE

To all persons to whom these presents shall come, Greeting:

THIS IS TO CERTIFY that the annexed is a true copy from the records of this office of the File Wrapper, Contents and Drawing, in the matter of the

Letters Patent of

Marcus C. Hopkins, Assignor, by Mesne Assignments, to Lektophone Corporation,

Number 1,271,529, Granted July 2, 1918,

for

Improvement in Acoustic Devices.

IN TESTIMONY WHEREOF I have hereunto set my hand and caused the seal of the Patent Office to be affixed, at the City of Washington, this fourteenth day of November in the year of our Lord, one thousand nine hundred and twenty-five and of the independence of the United States of America the one hundred and fiftieth.

ATTEST: D. E. Wilson, Chief of Division. Thomas E. Robertson, Commissioner of Patents.

NUMBER (Series of 1915), 229014

1918 (EX'R'S BOOK) 108 76

DIV. 23

PATENT No. 1271529

Name Marcus C. Hopkins,
Assor by mesne assigt to Lektophone Corporation, of New York, N.Y., a Corp. of Delaware

of New York,
County of
State of New York,
Invention Acoustic Devices.

PARTS OF APPLICATION FILED.

	ORIGINAL	RENEWED
Petition	April 12, 1918	, 191
Affidavit	" " , 1918	, 191
Specification	" " , 1918	, 191
Drawing	" " , 1918	, 191
Photo Copy	, 191	, 191
First Fee Cash	$15 April 17, 1918	, 191
" " Cert.	, 191	, 191
Appl. filed complete	April 17, 1918	, 191

Examined and Passed for Issue Apr 22, 1918 — , 191
H. W. Grosbeck, Exr. Div. 23 — Exr. Div.
Notice of Allowance April 29, 1918 By Commissioner — , 191 By Commissioner
Final Fee Cash $20 June 3, 1918 — , 191
" " Cert. , 191 — , 191

Patented July 2, 1918
Attorney Pennie, Davis, Marvin & Edmonds, 35 Nassau St. New York, N.Y.
Associate Attorney

(No. of Claims Allowed 7) Print Claims 1-4 in O. G. (Cl. 181-31)
Title as Allowed Acoustic Devices

Division of App., No. 7158-1 Caveat 229048 filed July 14 1913 Leveraged Mar. 22, 1918

DEPARTMENT OF THE INTERIOR
UNITED STATES PATENT OFFICE
WASHINGTON

APR 17 1918 C.C.U.S. PAT OFFICE

DIV. 23

THE COMMISSIONER OF PATENTS.

Sir:

Please ~~furnish~~ apply filing fee of $15 here with application of Marcus C. Hopkins, Sound Regenerating Machine - ~~receive~~ filed Apr. 12/18

Pennie, Davis, Marvin & Edmonds

(Give full address.) 35 Nassau St. New York.

Cost $

Received $

Delivered , 191

2036
4-13

MAIL ROOM
APR
12
1918
U.S. PATENT OFFICE

529

PETITION

TO THE COMMISSIONER OF PATENTS:

Your petitioner, MARCUS C. HOPKINS, a citizen of the United States, residing in the borough of Manhattan, City, County and State of New York, whose Post Office address is No. 35 Nassau Street, New York City, N. Y., prays that Letters Patent may be granted to him for improvements in ACOUSTIC DEVICES, as set forth in the annexed specification.

AND he hereby appoints JOHN C. PENNIE, WILLIAM H. DAVIS, ARBA B. MARVIN and DEAN S. EDMONDS (constituting the firm of PENNIE, DAVIS, MARVIN & EDMONDS, 35 Nassau Street, New York City, Registration No. 10839), and each of them, his Attorneys, with full power of substitution and revocation, to prosecute this application, to make alterations and amendments therein, to sign the drawings, to receive the patent, and to transact all business in the Patent Office connected therewith.

Marcus C. Hopkins

SPECIFICATION

TO ALL WHOM IT MAY CONCERN:

BE IT KNOWN that I, MARCUS C. HOPKINS, a citizen of the United States, residing in the Borough of Manhattan, City, County, and State of New York, have invented certain new and useful improvements in ACOUSTIC DEVICES; and I do hereby declare the following to be a full, clear, and exact description of the invention, such as will enable others skilled in the art to which it appertains, to make and use the same.

This invention relates to instruments which reproduce sounds; and is particularly directed to the attainment of a direct propagation, in free air, from a record or equivalent element subjected to the action of the original sound waves or vibrations, of self-sustaining sound waves substantially corresponding in intensity and amplitude, as well as in pitch or timbre, to the said original sound waves, as distinguished from an initial generation of violent air disturbances in a confined space, and a subsequent transformation of such disturbances into self-sustaining sound waves by means of a megaphone, horn or other amplifier.

In the case of a talking machine, the device employed to propagate the regenerated sound waves in air comprises the reproducer or sound-box and the horn; but the reproducer alone is incapable of propagating sound waves of the character above stated because of the fact that the air disturbances which are produced by its diaphragm and which issue through its mouth-piece are almost immediately dissipated in heat or in waves which are not heard at any considerable distance if the horn be removed. Consequently, it is usual in all instruments of the class indicated to employ an amplifier of some sort to resist transformation into heat and to control the lateral form of the wave during a progressive spreading action which is accompanied by a lessening of the violence of the disturbance until a wave front of great area is attained having a movement appropriate to the sound conductivity of air. In this way, it has been found practicable to transform a satisfactory part of the energy, obtained from a moving record, into self-sustaining

sound waves in air; but in every instance such method has been accompanied by distortions of the true recorded sounds in the reproducer, and more particularly in the horn or amplifier, giving rise to those characteristic sounds known as phonograph and horn sounds. These distortions of the true sounds are in a measure impressed upon the record in its making, but are more noticeable in the reproduction, where a suppression of character and overtones, the loss of timbre in instruments and the voice, and the accentuation of notes of certain pitch, so change the recorded number that a faithful reproduction is not obtained.

It is the object of the present invention to regenerate the original sounds directly from the record or other element subjected to the action of such sounds, without interposition of a confined body of air and without the employment of a restrictive transformer, such as a horn. According to the invention, the sound regenerator comprises a tympanum of relatively great area freely exposed to unconfined air, in which the sounds are to be propagated; the vibrations produced by the record or its equivalent, that is, the element on which the original sounds or sound waves are recorded, or which is otherwise subjected to the vibrating action of said sounds or sound waves and may, therefore, be termed the "sound-vibrated" element---being faithfully transmitted to the tympanum in such manner that the latter excites directly in the free air surrounding it, sound waves of an intensity and amplitude substantially corresponding to the original sound waves. In other words, the original sounds are directly regenerated by the vibrating tympanum without the interposition of a restrictive or sound-modifying transformer.

The invention consists, briefly, in the provision of a tympanum of novel construction, which is capable of responding to the high frequency vibrations employed in the reproduction of sounds, and of imparting these vibrations to a large body of air; and it is to be considered as a division of the invention shown and described in my prior application, renewed March 22, 1918, No. 224,048.

The accompanying drawing illustrates the improved tympanum incorporated in a sound-reproducing machine of the kind disclosed in said application, the single figure being a vertical sectional view taken transversely through the machine. Reference may be had to this application for a disclosure of the complete machine; and in order to facilitate an understanding of the present invention as compared with such disclosure, the same reference characters will be employed as in the said earlier application to indicate corresponding parts.

The machine represented in said drawing is mounted within a cabinet having a deck A, upon which the motor (not shown) and the sound regenerator are mounted. Side walls B extend downwardly from the edges of the deck A, and are preferably apertured on all sides and provided with open-work grills C, which afford substantially uninterrupted air paths for the sound waves from the interior of the cabinet in all directions laterally to the surrounding atmosphere. In the machine shown, the cabinet is bottomless and provided with legs D at its four corners. The motor may be of any suitable type, and is connected to drive the shaft of the turn-table F through the intermediary of gearing, as is

usual, said shaft projecting upwardly through the deck A. The turn-table carries the record F', which in this instance is the element directly acted upon by the original sound vibrations which are to be subsequently regenerated or reproduced; that is to say, the record, in the present construction, is the "sound-vibrated" element.

The sound regenerator has a right-angled tubular support G, the vertical arm g of which is engaged at diametrically-opposite points by bearing screws h', which project inwardly from and are carried by a ring h of larger diameter than the said arm g, as described in said prior application. The screws h' form a horizontal axis perpendicular to the horizontal arm g'' of the right-angled support G, about which axis the arm g'' can swing in a vertical plane, the vertical arm g the while being inclined within the ring h. The latter forms part of an annular bearing device secured upon the deck A, the open central portion of which device alines with an opening of larger diameter in said deck, and the said vertical arm g of the support G extends downwardly through these openings and has its lower extremity fitted in the hub j of a conical spider J and fastened to the same by a set screw j'.

The spider J in the present construction has three arms, only two of which appear, however; and to the lower ends of these arms there is secured by screws an annulus consisting of two ponderous rings K, K' of metal, which are clamped together by screws k spaced at short intervals. Two of the three arms of the said spider are screwed tightly to the rings K,K', and the third is so arranged that the

rings K,K' can be secured at varying distances from the foot of this third arm, there being sufficient spring in the spider arms to permit of an adjustment at this point of one-quarter of an inch or so, if desired. This detail is illustrated in my earlier case, and for that reason is not represented in the present case.

The tympanum L, which forms the subject of the present case, is constructed of light, vibratile material and has an annular plane peripheral portion or supporting rim 1, the outer edge of which is tightly gripped and rigidly supported between the rings K,K', and a central conical portion 1' rising from the inner edge of the said rim 1. If satisfactory regeneration of sounds from a record or other sound-vibrated element is to be had, the whole diameter of the tympanum, that is, the diameter of the aperture in the rings K,K' should exceed nine inches in order that the conditions required to regenerate the sound waves in the manner above described shall be fulfilled. The base of the central conical portion 1' should exceed in area one-half of the effective area of the entire tympanum, that is, the area of the aperture in the rings K,K'; or in other words, the diameter of the base of said conical portion should be at least eight-tenths of the diameter of the said aperture. The altitude of the conical portion 1' should be at least one-quarter of the diameter of its base.

It is, of course, possible to make some variation from the approximate sizes given without materially altering the result; but if the tympanum is constructed as shown in the drawing, any great variation from these proportions will be found to affect the character of the reproduction. It is

of vital importance that the tympanum be made of crisp, strong material, having considerable rigidity within itself, and it is also of vital importance that the tympanum as a whole be extremely light and have as little inertia as possible without a weakening effect. The tympanum is shown of conical form with a smooth surface, and this has been found to be very satisfactory. The conical shape is given the tympanum so that shocks or vibrations impressed upon the apex of the cone in a direction towards its base will move the whole cone bodily, the strains being imparted edgewise of the material and no wave motions being set up in the thin material of the cone. The curvature of the walls of the cone precludes the setting up of waves in the material; and the intended object, a simultaneous movement of the whole conical portion of the tympanum, is thus attained. While I prefer to construct the tympanum in the form described and shown with a smooth surface, especially in view of the ease of construction, yet it is possible to form radial or concentric corrugations in the plane peripheral portion 1 and produce a light, stiff and very satisfactory article for the purpose. It is conceivable, too, that when the tympanum is provided with corrugations as just suggested, some variation from the proportions above given may be made; but such variations will not be great. The tympanum should preferably be constructed of a colloidal substance, and should be from 3 to 20 thousandths of an inch in thickness according to the crispness or stiff character of the material used. Compressed fibrous material, such as hot pressed paper or fibre, has been found to act satisfactorily.

It will benoted that in the construction illustrated,

the arms of the spider J incline downwardly to correspond with the conical shape of the tympanum L, the apex of the conical portion of the tympanum pointing upwardly toward the deck A of the cabinet, and, also, that the concave side of the said tympanum is open to the surrounding atmosphere through the open bottom of the cabinet, no obstructions being presanted to the sound waves issuing from the concave surface of the tympanum.

A cap M is secured to the apex of the conical portion l of the tympanum, and this cap should be of more rigid construction than the remainder of the tympanum and should preferably be three-eighths of an inch or more in diameter. I prefer to make the cap M of metal, extremely light but very rigid, and in the form of two cones m, m' screwed tightly together upon opposite sides of the tympanum so as to grip the material thereof with their edges. In order that a tight and positive application of the cones forming the cap M to the conical portion of the tympanum may be had, it is preferable to form the inner cone m' of lesser angle, and the outer cone m of greater angle than the said conical portion, in which case their edges will securely grip the tympanum material when they are fastened together.

The vibrations or sound waves originally imparted to the record or its equivalent may be transmitted therefrom to the tympanum to vibrate the same in the manner and by means of the mechanism shown and described in my aforesaid application above identified, or by means of some other approved transmission means or mechanism, as will be understood. In any event, such means or mechanism forms no part of the

present case, however, and for that reason requires no extended disclosure. It is believed sufficient to state, therefore, that in the arrangement illustrated the mechanism in question is located within thehorizontal arm g" of the support G, and is connected at its forward end with the stylus holder q, the other end of said mechanism having connected to it a vertical rod V, which extends downwardly through the interior of the vertical arm g of the support and is rigidly secured to the cap M of the tympanum. In consequence, the vibrations of the stylus q' mounted in said holder and produced in the usual way by the phonic lines on the record, will be transmitted from the stylus through the transmission mechanism to the rod V, which will be vibrated endwise, the endwise vibrations of said rod being directly impressed upon the tympanum L.

I CLAIM:

1. An acoustic device, comprising a tympanum rigidly supported at its periphery and having a free area exceeding nine inches in diameter and a conical portion substantially eight-tenths of the diameter of said free area.

2. An acoustic device, comprising a tympanum rigidly supported at its periphery and having a free area exceeding nine inches in diameter and a conical portion substantially eight-tenths of the diameter of said free area, said conical portion being rigid in the direction of the axis of the tympanum.

3. An acoustic device, comprising a tympanum rigidly supported at its periphery and having a free area exceeding nine inches in diameter and a conical portion substantially eight-tenths of the diameter of said free area, the altitude of said conical portion being substantially one-quarter of the diameter of its base.

4. An acoustic device, comprising a tympanum support having a circular aperture, and a light tympanum freely exposed to unconfined air and having its outer edge rigidly mounted on said support in said aperture; said tympanum having a central conical portion, the base of which exceeds in area one-half the effective area of the said tympanum; the tympanum being of sufficient area to impart to the surrounding free air, when vibrated, sound waves substantially corresponding in intensity to the original sound waves.

5. An acoustic device, comprising a tympanum support having a circular aperture, and a light vibratile tympanum exceeding nine inches in diameter, having its

outer edge rigidly mounted on said support; said tympanum being shaped to provide an annular rim adjacent said support, and a conical portion springing from the inner edge of said annular rim, the diameter of the base of said conical portion being not less than eight-tenths of the said circular aperture in said support.

6. An acoustic device, comprising a tympanum support having a circular aperture, and a light vibratile ~~diaphragm~~ tympanum mounted in said aperture and having its outer edge secured to said support; said tympanum being shaped to provide an annular rim, the ~~inner~~ outer diameter of which exceeds nine inches, and a conical portion springing from the inner edge of said annular rim, the altitude of said conical portion being substantially one-fourth of the diameter of its base.

7. An acoustic device, comprising a tympanum support having a circular aperture exceeding nine inches in diameter, and a light vibratile tympanum mounted in said aperture and having its outer edge rigidly secured to said support; said tympanum being shaped to provide an annular rim adjacent said support, and a conical portion springing from the inner edge of said annular rim, the diameter of the base of said conical portion being not less than eight-tenths of the diameter of said circular aperture, and the altitude of said conical portion being substantially one-quarter of the diameter of its base.

Insert B

8. An acoustic device, comprising a tympanum of colloidal material rigidly supported at its periphery and having a free area exceeding nine inches in diameter and a conical portion substantially eight-tenths of the

diameter of said free area, the altitude of said conical portion being substantially one-quarter of the diameter of its base.

9. An acoustic device, comprising a tympanum of compressed fibrous material rigidly supported at its periphery and having a free area exceeding nine inches in diameter and a conical portion substantially eight-tenths of the diameter of said free area, the altitude of said conical portion being substantially one-quarter of the diameter of its base.

10. An acoustic device, comprising a tympanum of compressed fibrous material rigidly supported at its periphery and having a free area exceeding nine inches in diameter and a conical portinn substantially eight-tenths of the diameter of said free area.

11. An acoustic device, comprising a tympanum freely exposed to unconfined air and comprising a conical portion of compressed fibrous material, upon the apex of which portinn shocks or vibrations are adapted to be impressed in a direction such that said shocks or vibrations will move the entire conical portion bodily.

12. An acoustic device, comprising a tympanum freely exposed to unconfined air and comprising a conical portion upon the apex of which shocks or vibrations are adapted to be impressed in a direction such that said shocks or vibrations will move the entire conical portion bodily; said conical portion being of sufficient area to impart to the surrounding free air, when vibrated, sound

waves substantially corresponding in intensity to the original shocks or vibrations.

13. An accustic device, comprising a tympanum freely exposed to unconfined air and comprising a conical portion of compressed fibrous material, uponthe apex of which portion shocks or vibrations are adapted to be impressed in a direction such that said shocks or vibrations will move the entire conical portion bodily; the said conical portion being of sufficient area to impart to the surrounding free air, when vibrated, sound waves substantially corresponding in intensity to the original shocks or vibrations.

IN TESTIMONY WHEREOF I affix my signature.

Marcus C. Hopkins

OATH

COUNTY OF NEW YORK, : ss.-
State of New York- :

MARCUS C. HOPKINS, the above named petitioner, being duly sworn, deposes and says, that he is a citizen of the United States and a resident of the Borough of Manhattan, City, County and State of New York; that he verily believes himself to be the original, first and sole inventor of the improvements in ACOUSTIC DEVICES described and claimed in the annexed specification, which is a division of his former application for United States Letters Patent, Serial Number 778,826, filed July 14, 1913; that he does not know and does not believe that the same was ever known or used before his invention or discovery thereof, or patents or described in any printed publication in any country before his invention or discovery thereof, or more than two years prior to his said application, or in public use or on sale in the United States for more than two years prior to his said application: that said invention has not been patented in any country foreign to the United States on an application filed by him or his legal representatives or assigns more than twelve months prior to the said application; and that no application for patent on said improvement has been filed by him, or his representatives or assigns in any country foreign to the United States, except as follows:

Austria, filed July 14, 1914, Ser.No.A 6151;
Belgium, " " " " " " 220,014; Patented July 14,1914, No.269,216;
Canada, " " 28, 1915, Ser.No.196,573; Patented April 25, 1916, No.169,043:
Denmark, " " July 13, 1914, Ser.No.1,228; Patented January 25, 1916, No.20,972;

France, filed July 13, 1914, Ser.No. 72,606, Patented July 13, 1914, No. 475,109;
Germany, filed July 14, 1914, Ser.No. D 31161, Patented July 15, 1914, No. 286,137;
Great Britain, filed July 11, 1914, Ser.No. 16,602, patented July 14, 1913, No. 16,602;
Holland, filed June 11, 1915, Ser.No. 5,981;
Italy, filed July 15, 1914, Patent No. 144,682;
Norway, filed July 13, 1914, Ser.No. 6,718, Patent No. 26,721,
Sweden, filed July 11, 1914, Ser. No. 1,937;
Switzerland, filed July 14, 1914, Ser.No. 81,372, Patent No. 71,939.

Marcus L. Hopkins

SUBSCRIBED AND SWORN TO before me, this 6th day of April, 1918.

M. A. Bill
Notary Public Kings Co
Cert filed N.Y. Co.
Notary # 255.

#2

DIV. 23

New York, N. Y., April 11, 1918

Honorable Commissioner of Patents

Washington, D. C.

S i r:

The application to which this communication is attached is filed as a division of a prior application of the same inventor, originally filed July 14, 1913, Serial No. 778,826, renewed March 22, 1918, Serial No. 224,048. The earlier application contains a disclosure of the complete machine or apparatus, whereas on the other hand, the present application is restricted to the diaphragm or tympanum per se. For that reason, the drawings of the earlier application contain many figures which have no bearing on the invention claimed in the present case, and during a discussion with the Examiner in charge of the earlier case, the suggestion was made by him that the divisional case be restricted to a single figure which would show as little as possible of the structure irrelevant to the invention. This course has accordingly been followed, the single figure of the present case corresponding to the Fig. 4 of the earlier application.

Very respectfully,

Pennie, Davis, Marvin & Edmonds

Attorneys for Applicant

12-3
4213

#3
a

IN THE UNITED STATES PATENT OFFICE.

Application of MARCUS C. HOPKINS

Filed April 17, 1918

Serial No. 229,014

SOUND REGENERATING MACHINES.

New York, N. Y., April 19, 1918

Honorable Commissioner of Patents

Washington, D. C.

S i r:

Prior to action on the merits of the case, entry of the following amendments is hereby directed:

In lines 3 and 4 of each of Claims, 1, 2 and 3, change, "substantially" to "the diameter of which is not less than".

Claim 6, line 5, change "inner" to "outer".

Cancel Claims 8 to 13, inclusive.

The amendments to Claims 1 to 3, and 6, have been made to render the present case consistent with the disclosure in the parent case, Serial No. 778,826, filed July 14, 1913.

Claims 8 to 13 have been cancelled in order to reduce the number of claims and for the further reason that the subjects matter thereof are adequately covered in the claims retained.

Very respectfully,

Pennie, Davis, Marvin & Edmonds

Attorneys for Hopkins.

2-073

DEPARTMENT OF THE INTERIOR

UNITED STATES PATENT OFFICE

WASHINGTON

PETITION: June 5, 1918

Application of M. C. Hopkins

Serial No. 229,014

Invention:

This petition is referred to the Examiner in charge of Division 23 for recommendation.

In case he recommends adversely he will state his reasons therefor and furnish a copy thereof to petitioner.

J. T. Newton

Commissioner of Patents.

DIV. 23

Fee June 3/18 #4 B

Div. 23.

IN THE UNITED STATES PATENT OFFICE

Application of

Marcus C. Hopkins,

Filed April 17, 1918,

Serial No. 229,014.

SOUND REGENERATING MACHINES.

Allowed April 29, 1918. New York City, June 3, 1918.

Hon. Commissioner of Patents,

Washington, D.C.

S I R:

Entry of the following additional claim is requested under the provisions of Rule 78.

P.D.M.&C. B'

"8. An acoustic device, comprising a tympanum embodying a bodily movable, central conical portion, and an annular rim which encircles said conical portion and which is rigidly supported, said conical portion being freely exposed on all sides to unconfined air and being of sufficient area to produce self-sustaining sound waves in the surrounding air when vibrated, substantially as described."

Sign.

REMARKS:

The above claim as been submitted informally to both the Principal and Assistant Examiners in charge of the case, and has been accpeted as allowable, no further search being necessary.

Very respectfully,

Pennie, Davis, Marvin & Edmonds

Attorneys for Hopkins.

APPROVED: JUN 6 - 1918 R. F. Whitehead First Assistant Commissioner.

The proposed ~~correction being~~ claims requiring no further search, ~~[illegible]~~, it is recommended that this amendment be entered under Rule 78, without withdrawing the case from issue. The final fee has not been paid.

H. D. Grosbeck, Examiner Div. 23.

Div. 23 Room 217
Address only "The Commissioner of Patents, Washington, D. C.," and not any official by name.

254

Paper No. 5
All communications respecting this application should give the serial number, date of filing, title of invention, and name of the applicant.

B-T

DEPARTMENT OF THE INTERIOR

UNITED STATES PATENT OFFICE

WASHINGTON June 8, 1918.

EXAMINER'S AMENDMENT.

Pennie, Davis, Marvin & Edmonds,

35 Nassau St.

New York, N.Y.

Please find below a communication from the ***EXAMINER*** *in charge of the application of*

Marcus C. Hopkins, for Acoustic Devices, filed April 17, 1918, Serial No. 229,014.

James T. Newton

Commissioner of Patents.

In accordance with the provisions of Order No. 2308, dated March 12, 1917, which reads in part as follows:

* * * * * * *

> Obvious informalities in the application may be corrected by the examiner, but said correction must be in the form of an amendment, approved by the Principal Examiner in writing, placed in the file, and made a part of the record. The changes specified in the amendment will be entered by the clerk in the regular way.

* * * * * * * *

the changes, hereinafter specified, are made by the examiner in the application above identified.

Should these changes not be satisfactory to the applicant, appropriate amendment may be proposed under the provisions of Rule 78, provided the specification has not been printed.

The application has been amended as follows:

4—1556

Claim 6, line 3; change -diaphragm- to tympanum.

H. D. Crosbrek.

Examiner.

310

ADDRESS ONLY
THE COMMISSIONER OF PATENTS
WASHINGTON, D. C.

LETTER NO. 56

DEPARTMENT OF THE INTERIOR

UNITED STATES PATENT OFFICE

WASHINGTON

June 7, 1918.

In the matter of the
Application of
Marcus C. Hopkins,
Acoustic Devices;
Filed April 17, 1918
Serial No. 229,014.

Amendment.

Sir:

You are hereby informed that the recommendation of the examiner that the amendment be admitted under the provisions of Rule 78, has been approved by the First Assistant Commissioner and the amendment entered.

By direction of the Commissioner:

Very respectfully,

M. H. Coulston,

Chief Clerk.

F.

Marcus C. Hopkins,
c/o Pennie, Davis, Marvin & Edmonds,
35 Nassau St.
New York City.

ADDRESS ONLY
THE COMMISSIONER OF PATENTS,
WASHINGTON, D. C.

AH 2—181 **Serial No. 229,014**

DEPARTMENT OF THE INTERIOR

UNITED STATES PATENT OFFICE

WASHINGTON Apr,29,1918.

Marcus C. Hopkins, Assor.,

Sir: Your APPLICATION for a patent for an IMPROVEMENT in Acoustic Devices, filed April 17,1918., has been examined and ALLOWED.

The final fee, TWENTY DOLLARS, must be paid not later than SIX MONTHS from the date of this present notice of allowance. If the final fee be not paid within that period, the patent on this application will be withheld, unless renewed with an additional fee of $15, under the provisions of Section 4897, Revised Statutes.

The office delivers patents upon the day of their date, and on which their term begins to run. The printing, photolithographing, and engrossing of the several patent parts, preparatory to final signing and sealing, will require about four weeks, and such work will not be undertaken until after payment of the necessary fee.

When you send the final fee you will also send, DISTINCTLY AND PLAINLY WRITTEN, the name of the INVENTOR, TITLE OF INVENTION, AND SERIAL NUMBER AS ABOVE GIVEN, DATE OF ALLOWANCE (which is the date of this circular), DATE OF FILING, and, if assigned, the NAMES OF THE ASSIGNEES.

If you desire to have the patent issue to ASSIGNEES, an assignment containing a REQUEST to that effect, together with the FEE for recording the same, must be filed in this office on or before the date of payment of final fee.

After issue of the patent uncertified copies of the drawings and specifications may be purchased at the price of FIVE CENTS EACH. The money should accompany the order. Postage stamps will not be received.

Final fees will NOT be received from other than the applicant, his assignee or attorney, or a party in interest as shown by the records of the Patent Office.

Respectfully,

J. T. Newton
Thomas Ewing
Commissioner of Patents.

Pennie, Davis, Marvin & Edmonds,

35 Nassau Street,

New York, N. Y.

229,014
23

IN REMITTING THE FINAL FEE GIVE THE SERIAL NUMBER AT THE HEAD OF THIS NOTICE.

UNCERTIFIED CHECKS WILL NOT BE ACCEPTED.

312

20 REC'D JUN 3 1918 C.C.U.S. PAT OFFICE

4213

-327.

MEMORANDUM

OF

FEE PAID AT UNITED STATES PATENT OFFICE.

(Be careful to give correct Serial No.)

Serial No. 229,014 June 1, 1918.

INVENTOR:

MARCUS C. HOPKINS

PATENT TO BE ISSUED TO

LEKTOPHONE CORPORATION

NAME OF INVENTION, AS ALLOWED:

ACOUSTIC DEVICES

DATE OF PAYMENT:

June 3, 1918.

FEE:

TWENTY DOLLARS

DATE OF FILING:

April 17, 1918.

DATE OF CIRCULAR OF ALLOWANCE:

April 29, 1918.

The Commissioner of Patents will please apply the accompanying fee as indicated above.

Pennie, Davis, Marvin & Edmonds

Attorneys

SEND PATENT TO

PENNIE, DAVIS, MARVIN & EDMONDS,

35 Nassau Street,

New York City.

6—1846

MAIL ROOM NOV 4 1924 U.S. PATENT OFFICE

United States District Court

#7.

District of New York.

HONORABLE COMMISSIONER OF PATENTS,
Washington, D. C.

SIR:

In compliance with the Act of February 18, 1922 ~~(41 Stat. L.~~ 42 Stat. L. 392), you are advised that there was filed on the 31st day of October, 1924, in this court an action, suit, or proceeding No. E 20-234, entitled:

Name Lektaphone Corporation, Plaintiff,
Address Jersey City N. J.

versus

Name Western Electric Company Inc., Defendant,
Address New York. N.Y.

brought upon the following patents:

	PATENT NO	DATE OF PATENT	PATENTEE
1.	1,271,529	Apr 17. 1918	Lektaphone Corp
2.			
3.			
4.			
5.			

In the above-entitled case, on the ..... day of ....., 192 , the following patents have been included by ..... (insert amendment, answer, cross bill, or other pleading):

	PATENT NO.	DATE OF PATENT	PATENTEE
1.			
2.			
3.			
4.			
5.			

In the above-entitled case the following decision has been rendered or decree issued:

.....

.....

In witness whereof I have affixed my hand this 3rd day of November, 192 4, at New York. N.Y.

Alexander Gilchrist Jr.
Clerk of said Court.

MAIL ROOM MAY 28 1925

United States District Court

#19

Eastern District of New-York

HONORABLE COMMISSIONER OF PATENTS,
Washington, D. C.

SIR:

In compliance with the Act of February 18, 1922 (~~41~~ 42 Stat. L. ....), you are advised that there was filed on the 3rd day of March, 1925, in this court an action, suit, or proceeding No. 2075, entitled:

Name Lektophone Corp, Plaintiff,
Address Jersey City, N.J.

versus

Name Sylo Lighting Fixture Co, Defendant,
Address 166 Flatbush Ave., Brooklyn New York

brought upon the following patents:

	PATENT NO.	DATE OF PATENT	PATENTEE
1	1271527	July 2, 1918	Plaintiff as assignee
2	1271529	" " "	" " "
3			
4			
5			

In the above-entitled case, on the ..... day of ....., 192 ,
the following patents have been included by ..... (insert amendment, answer, cross bill, or other pleading):

	PATENT NO.	DATE OF PATENT	PATENTEE
1			
2			
3			
4			
5			

In the above-entitled case the following decision has been rendered or decree issued:

In witness whereof I have affixed my hand this 25th day of May, 1925, at Brooklyn New York

Percy G. B. Gilkes
Clerk of said Court.

Form 788

#20

MAIL ROOM NOV 3 1925 U.S. PATENT OFFICE

United States District Court

District of NEW JERSEY

HONORABLE COMMISSIONER OF PATENTS,
Washington, D. C.

SIR:

In compliance with the Act of February 18, 1922 ~~42 Stat. L.~~ 42, you are advised that there was filed on the 4th day of September, 1925, in this court an action, suit, or proceeding No. E-1431, entitled:

Name Lektophone Corporation, Plaintiff,

Address Jersey City, N. J.

versus

Name De Forest Radio Company, Defendant,

Address 139 Franklin St., Jersey City, N. J.

brought upon the following patents:

	PATENT NO.	DATE OF PATENT	PATENTEE
1	1,271,527	July 14, 1913	Marcus C. Hopkins
2	1,271,529	July 14, 1913	Marcus C. Hopkins
3			
4			
5			

In the above-entitled case, on the ..... day of ....., 192 , the following patents have been included by ..... (insert amendment, answer, cross bill, or other pleading):

	PATENT NO.	DATE OF PATENT	PATENTEE
1			
2			
3			
4			
5			

In the above-entitled case the following decision has been rendered or decree issued:

.....

.....

In witness whereof I have affixed my hand this 28th day of October, 1925, at Trenton, N. J.

George T. Cranmer
Clerk of said Court.

R. S. Chevrier, Deputy.

1,271,529.

Patented July 2, 1918.

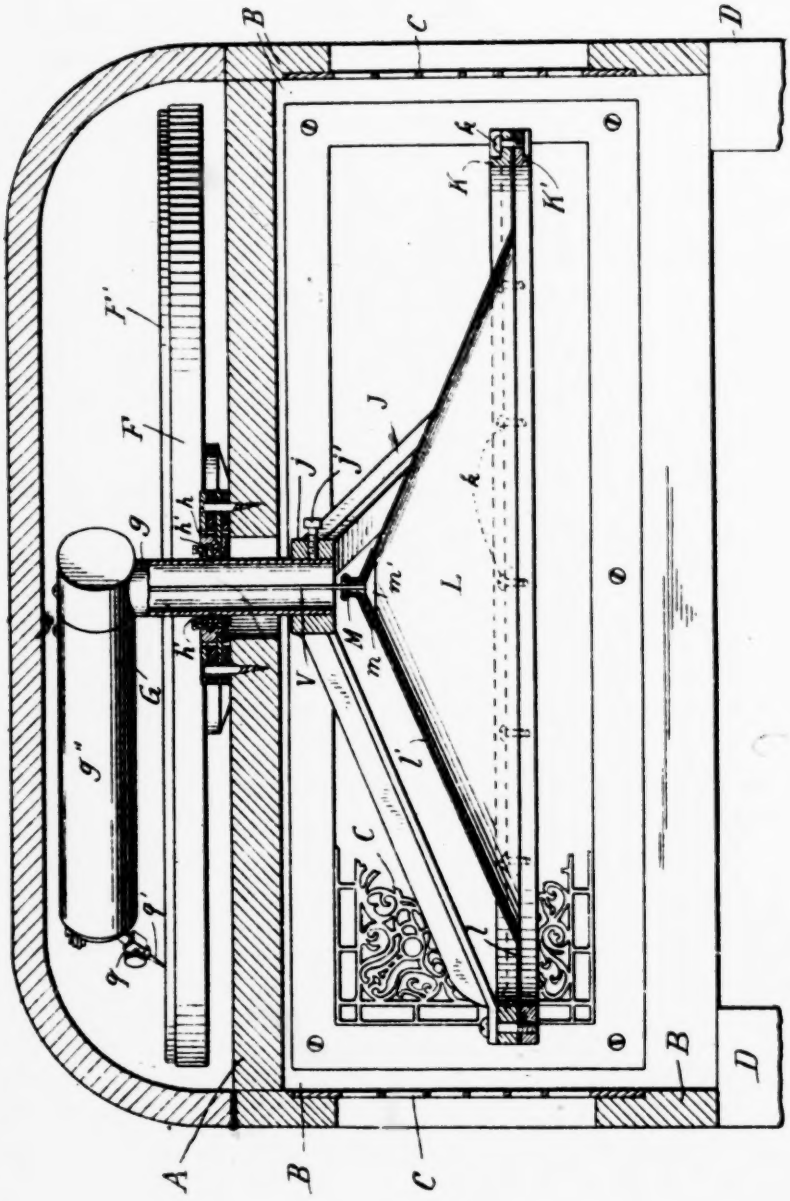

Inventor
Marcus C. Hopkins

By Attorneys
Pennie, Davis, Marvin & Edmonds

UNITED STATES PATENT OFFICE.

MARCUS C. HOPKINS, OF NEW YORK, N. Y., ASSIGNOR, BY MESNE ASSIGNMENTS, TO LEKTOPHONE CORPORATION, OF NEW YORK, N. Y., A CORPORATION OF DELAWARE.

ACOUSTIC DEVICE.

1,271,529. Specification of Letters Patent. Patented July 2, 1918.

Original application filed July 14, 1913. Serial No. 778,826. Renewed March 22, 1918. Serial No. 224,048. Divided and this application filed April 17, 1918. Serial No. 229,014.

To all whom it may concern:

Be it known that I, MARCUS C. HOPKINS, a citizen of the United States, residing in the borough of Manhattan, city, county, and State of New York, have invented certain new and useful Improvements in Acoustic Devices; and I do hereby declare the following to be a full, clear, and exact description of the invention, such as will enable others skilled in the art to which it appertains to make and use the same.

This invention relates to instruments which reproduce sounds; and is particularly directed to the attainment of a direct propagation, in free air, from a record or equivalent element subjected to the action of the original sound waves or vibrations, of self-sustaining sound waves substantially corresponding in intensity and amplitude, as well as in pitch or timbre, to the said original sound waves, as distinguished from an initial generation of violent air disturbances in a confined space, and a subsequent transformation of such disturbances into self-sustaining sound waves by means of a megaphone, horn or other amplifier.

In the case of a talking machine, the device employed to propagate the regenerated sound waves in air comprises the reproducer or sound-box and the horn; but the reproducer alone is incapable of propagating sound waves of the character above stated because of the fact that the air disturbances which are produced by its diaphragm and which issue through its mouth-piece are almost immediately dissipated in heat or in waves which are not heard at any considerable distance if the horn be removed. Consequently, it is usual in all instruments of the class indicated to employ an amplifier of some sort to resist transformation into heat and to control the lateral form of the wave during a progressive spreading action which is accompanied by a lessening of the violence of the disturbance until a wave front of great area is attained having a movement appropriate to the sound conductivity of air. In this way, it has been found practicable to transform a satisfactory part of the energy, obtained from a moving record, into self-sustaining sound waves in air; but in every instance such method has been accompanied by distortions of the true recorded sounds in the reproducer, and more particularly in the horn or amplifier, giving rise to those characteristic sounds known as phonograph and horn sounds. These distortions of the true sounds are in a measure impressed upon the record in its making, but are more noticeable in the reproduction, where a suppression of character and overtones, the loss of timbre in instruments and the voice, and the accentuation of notes of certain pitch, so change the recorded number that a faithful reproduction is not obtained.

It is the object of the present invention to regenerate the original sounds directly from the record or other element subjected to the action of such sounds, without interposition of a confined body of air and without the employment of a restrictive transformer, such as a horn. According to the invention, the sound regenerator comprises a tympanum of relatively great area freely exposed to unconfined air, in which the sounds are to be propagated; the vibrations produced by the record or its equivalent,—that is, the element on which the original sounds or sound waves are recorded, or which is otherwise subjected to the vibrating action of said sounds or sound waves and may, therefore, be termed the "sound-vibrated" element—being faithfully transmitted to the tympanum in such manner that the latter excites directly in the free air surrounding it, sound waves of an intensity and amplitude substantially corresponding to the original sound waves. In other words, the original sounds are directly regenerated by the vibrating tympanum without the interposition of a restrictive or sound-modifying transformer.

The invention consists, briefly, in the provision of a tympanum of novel construction, which is capable of responding to the high frequency vibrations employed in the reproduction of sounds, and of imparting these vibrations to a large body of air; and it is to be considered as a division of the invention shown and described in my prior application, renewed March 22, 1918, No. 224,048.

The accompanying drawing illustrates the improved tympanum incorporated in a sound-reproducing machine of the kind disclosed in said application, the single figure being a vertical sectional view taken transversely through the machine. Reference

may be had to this application for a disclosure of the complete machine; and in order to facilitate an understanding of the present invention as compared with such disclosure, the same reference characters will be employed as in the said earlier application to indicate corresponding parts.

The machine represented in said drawing is mounted within a cabinet having a deck A, upon which the motor (not shown) and the sound regenerator are mounted. Side walls B extend downwardly from the edges of the deck A, and are preferably apertured on all sides and provided with open-work grills C, which afford substantially uninterrupted air paths for the sound waves from the interior of the cabinet in all directions laterally to the surrounding atmosphere. In the machine shown, the cabinet is bottomless and provided with legs D at its four corners. The motor may be of any suitable type, and is connected to drive the shaft of the turn-table F through the intermediary of gearing, as is usual, said shaft projecting upwardly through the deck A. The turn-table carries the record F', which in this instance is the element directly acted upon by the original sound vibrations which are to be subsequently regenerated or reproduced; that is to say, the record, in the present construction, is the "sound-vibrated" element.

The sound regenerator has a right-angled tubular support G, the vertical arm g of which is engaged at diametrically-opposite points by bearing screws h', which project inwardly from and are carried by a ring h of larger diameter than the said arm g, as described in said prior application. The screws h' form a horizontal axis perpendicular to the horizontal arm g'' of the right-angled support G, about which axis the arm g'' can swing in a vertical plane, the vertical arm g the while being inclined within the ring h. The latter forms part of an annular bearing device secured upon the deck A, the open central portion of which device alines with an opening of larger diameter in said deck, and the said vertical arm g of the support G extends downwardly through these openings and has its lower extremity fitted in the hub j of a conical spider J and fastened to the same by a set screw j'.

The spider J in the present construction has three arms, only two of which appear, however; and to the lower ends of these arms there is secured by screws an annulus consisting of two ponderous rings K, K' of metal, which are clamped together by screws k spaced at short intervals. Two of the three arms of the said spider are screwed tightly to the rings K, K', and the third is so arranged that the rings K, K' can be secured at varying distances from the foot of this third arm, there being sufficient spring in the spider arms to permit of an adjustment at this point of one-quarter of an inch or so, if desired. This detail is illustrated in my earlier case, and for that reason is not represented in the present case.

The tympanum L, which forms the subject of the present case, is constructed of light, vibratile material and has an annular plane peripheral portion or supporting rim l, the outer edge of which is tightly gripped and rigidly supported between the rings K, K', and a central conical portion l' rising from the inner edge of the said rim l. If satisfactory regeneration of sounds from a record or other sound-vibrated element is to be had, the whole diameter of the tympanum, that is, the diameter of the aperture in the rings K, K' should exceed nine inches in order that the conditions required to regenerate the sound waves in the manner above described shall be fulfilled. The base of the central conical portion l' should exceed in area one-half of the effective area of the entire tympanum, that is, the area of the aperture in the rings K, K'; or in other words, the diameter of the base of said conical portion should be at least eight-tenths of the diameter of the said aperture. The altitude of the conical portion l' should be at least one-quarter of the diameter of its base.

It is, of course, possible to make some variation from the approximate sizes given without materially altering the result; but if the tympanum is constructed as shown in the drawing, any great variation from these proportions will be found to affect the character of the reproduction. It is of vital importance that the tympanum be made of crisp, strong material, having considerable rigidity within itself, and it is also of vital importance that the tympanum as a whole be extremely light and have as little inertia as possible without a weakening effect. The tympanum is shown of conical form with a smooth surface, and this has been found to be very satisfactory. The conical shape is given the tympanum so that shocks or vibrations impressed upon the apex of the cone in a direction toward its base will move the whole cone bodily, the strains being imparted edgewise of the material and no wave motions being set up in the thin material of the cone. The curvature of the walls of the cone precludes the setting up of waves in the material; and the intended object, a simultaneous movement of the whole conical portion of the tympanum, is thus attained. While I prefer to construct the tympanum in the form described and shown with a smooth surface, especially in view of the ease of construction, yet it is possible to form radial or concentric corrugations in the plane peripheral portion l and produce a light, stiff and very satisfactory article

for the purpose. It is conceivable, too, that when the tympanum is provided with corrugations as just suggested, some variation from the proportions above given may be made; but such variations will not be great. The tympanum should preferably be constructed of a colloidal substance, and should be from 3 to 20 thousandths of an inch in thickness according to the crispness or stiff character of the material used. Compressed fibrous material, such as hot pressed paper or fiber, has been found to act satisfactorily.

It will be noted that in the construction illustrated, the arms of the spider J incline downwardly to correspond with the conical shape of the tympanum L, the apex of the conical portion of the tympanum pointing upwardly toward the deck A of the cabinet, and, also, that the concave side of the said tympanum is open to the surrounding atmosphere through the open bottom of the cabinet, no obstructions being presented to the sound waves issuing from the concave surface of the tympanum.

A cap M is secured to the apex of the conical portion *l* of the tympanum, and this cap should be of more rigid construction than the remainder of the tympanum and should preferably be three-eighths of an inch or more in diameter. I prefer to make the cap M of metal, extremely light but very rigid, and in the form of two cones *m*, *m'* screwed tightly together upon opposite sides of the tympanum so as to grip the material thereof with their edges. In order that a tight and positive application of the cones forming the cap M to the conical portion of the tympanum may be had, it is preferable to form the inner cone *m'* of lesser angle, and the outer cone *m* of greater angle than the said conical portion, in which case their edges will securely grip the tympanum material when they are fastened together.

The vibrations or sound waves originally imparted to the record or its equivalent may be transmitted therefrom to the tympanum to vibrate the same in the manner and by means of the mechanism shown and described in my aforesaid application above identified, or by means of some other approved transmission means or mechanism, as will be understood. In any event, such means or mechanism forms no part of the present case, however, and for that reason requires no extended disclosure. It is believed sufficient to state, therefore, that in the arrangement illustrated the mechanism in question is located within the horizontal arm *g''* of the support G, and is connected at its forward end with the stylus holder *q*, the other end of said mechanism having connected to it a vertical rod V, which extends downwardly through the interior of the vertical arm *g* of the support and is rigidly secured to the cap M of the tympanum. In consequence, the vibrations of the stylus *q'* mounted in said holder and produced in the usual way by the phonic lines on the record, will be transmitted from the stylus through the transmission mechanism to the rod V, which will be vibrated endwise, the endwise vibrations of said rod being directly impressed upon the tympanum L.

I claim:

1. An acoustic device, comprising a tympanum rigidly supported at its periphery and having a free area exceeding nine inches in diameter and a conical portion, the diameter of which is not less than eight-tenths of the diameter of said free area.

2. An acoustic device, comprising a tympanum rigidly supported at its periphery and having a free area exceeding nine inches in diameter and a conical portion, the diameter of which is not less than eight-tenths of the diameter of said free area, said conical portion being rigid in the direction of the axis of the tympanum.

3. An acoustic device, comprising a tympanum rigidly supported at its periphery and having a free area exceeding nine inches in diameter and a conical portion, the diameter of which is not less than eight-tenths of the diameter of said free area, the altitude of said conical portion being substantially one-quarter of the diameter of its base.

4. An acoustic device, comprising a tympanum support having a circular aperture, and a light tympanum freely exposed to unconfined air and having its outer edge rigidly mounted on said support in said aperture; said tympanum having a central conical portion, the base of which exceeds in area one-half the effective area of the said tympanum; the tympanum being of sufficient area to impart to the surrounding free air, when vibrated, sound waves substantially corresponding in intensity to the original sound waves.

5. An acoustic device, comprising a tympanum support having a circular aperture, and a light vibratile tympanum exceeding nine inches in diameter, having its outer edge rigidly mounted on said support; said tympanum being shaped to provide an annular rim adjacent said support, and a conical portion springing from the inner edge of said annular rim, the diameter of the base of said conical portion being not less than eight-tenths of the said circular aperture in said support.

6. An acoustic device, comprising a tympanum support having a circular aperture, and a light vibratile tympanum mounted in said aperture and having its outer edge secured to said support; said tympanum being shaped to provide an annular rim, the outer

diameter of which exceeds nine inches, and a conical portion springing from the inner edge of said annular rim, the altitude of said conical portion being substantially one-fourth of the diameter of its base.

7. Au acoustic device, comprising a tympanum support having a circular aperture exceeding nine inches in diameter, and a light vibratile tympanum mounted in said aperture and having its outer edge rigidly secured to said support; said tympanum being shaped to provide an annular rim adjacent said support, and a conical portion springing from the inner edge of said annular rim, the diameter of the base of said conical portion being not less than eight-tenths of the diameter of said circular aperture, and the altitude of said conical portion being substantially one-quarter of the diameter of its base.

8. An acoustic device, comprising a tympanum embodying a bodily movable, central conical portion, and an annular rim which encircles said conical portion and which is rigidly supported, said conical portion being freely exposed on all sides to unconfined air and being of sufficient area to produce self-sustaining sound waves in the surrounding air when vibrated, substantially as described.

In testimony whereof I affix my signature.

MARCUS C. HOPKINS.

Copies of this patent may be obtained for five cents each, by addressing the "Commissioner of Patents, Washington, D. C."

2-421

1918

CONTENTS.

1. Application 2 papers
2. Letter ap. 12/18
3. Amdt. A. 1/20/18
4. Amdt. B. June 3/18
5. Exrs. Amdt. 6/8/18
6. Notice of entry of Amendment June 7/18
7. Notice of Suit Nov. 4-1924
8. (a) Notice of Suit Mar. 10-1926 May 26-1925
9. Notice of Suit Nov. 3-1925
10.
11.
12.
13.
14.
15.
16.
16.
17.
17.
18.
19.
20.
21.
22.
23.
23.
24.
25
26.
27.
28.
29.
30.
31.
32.
33.
34.
35.
36.
37.
38.
39.
40.
41.
42.
43.
44.
45.
46.
47.
48.
49.
50.

M. C. HOPKINS.

ACOUSTIC DEVICE.

APPLICATION FILED APR. 17, 1918.

1,271,529.

Patented July 2, 1918.

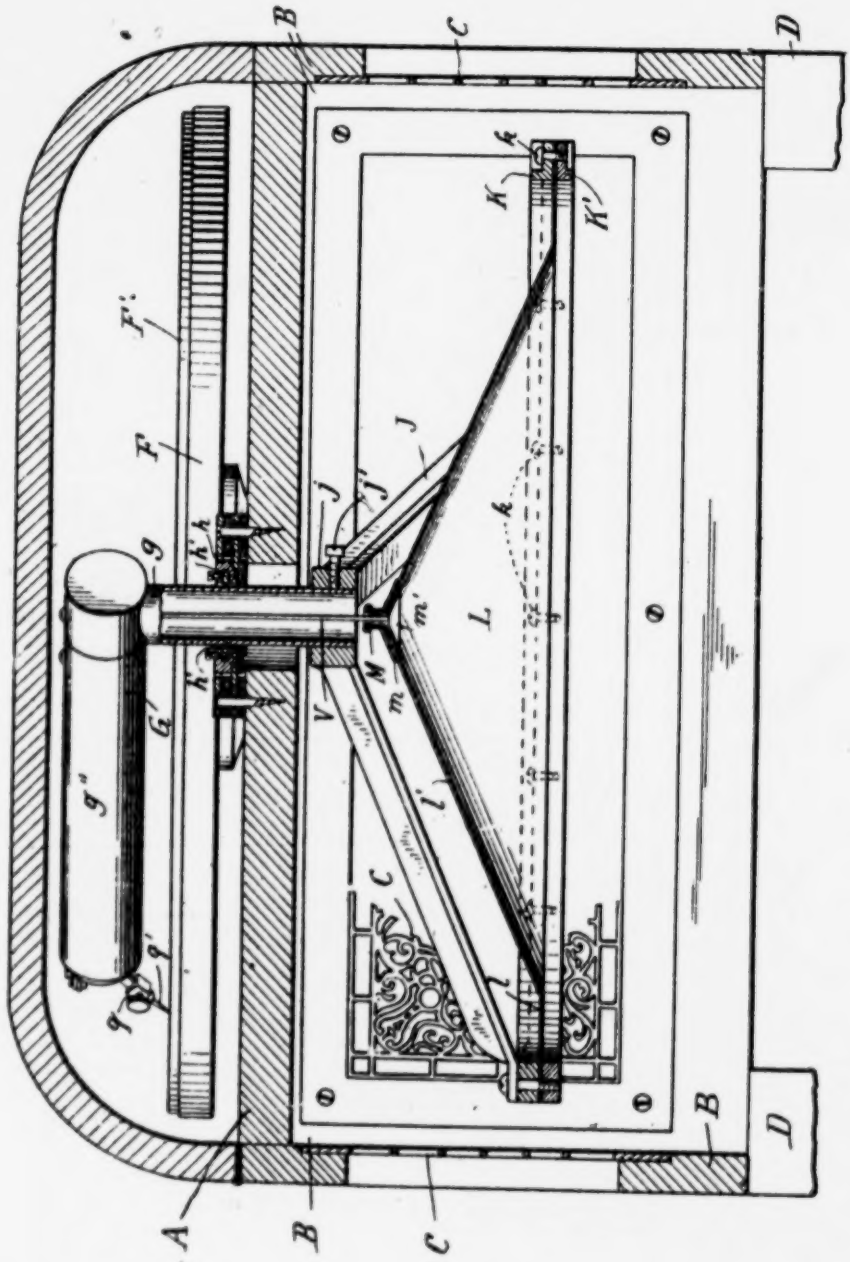

Inventor
Marcus C. Hopkins

By Attorneys
Pennie, Davis, Marvin & Edmonds

PLAINTIFF'S EXHIBIT No. 2.

DEPARTMENT OF COMMERCE
PATENT OFFICE

To all persons to whom these presents shall come, Greeting:

THIS IS TO CERTIFY that the annexed is a true copy from the records of this office of the File Wrapper, Contents and Drawings, in the matter of the

Letters Patent of

Marcus C. Hopkins, Assignor, by Mesne Assignments, to Lektophone Corporation,

Number 1,271,527, Granted July 2, 1918;

for

Improvement in Sound-Regenerating Machines.

IN TESTIMONY WHEREOF I have hereunto set my hand and caused the seal of the Patent Office to be affixed, at the City of Washington, this fourteenth day of November in the year of our Lord, one thousand nine hundred and twenty-five and of the Independence of the United States of America the one hundred and fiftieth.

ATTEST:

Chief of Division.

Thomas E. Robertson
Commissioner of Patents.

Renewal 2036

FORFEITED

DIV. 23 1913 (EX'R'S BOOK) 2 15

NUMBER (Series of 1900) Series of 1915.

~~778,826~~ 224048 PATENT No. 1271527

Name Marcus C. Hopkins

Assor. to ~~John L. Pennie and William H. Davis~~ Both of New York, N.Y. by mesne assigts to Lektophone Corporation, N.Y., New York, a corp. of Delaware.

of Jersey City

County of

State of New Jersey

Invention Sound Regenerating Machine

	ORIGINAL	RENEWED
Petition	July 14, 1913	Mar. 22, 1918
Affidavit	" " 1913	, 191
Specification	" " 1913	, 191
Drawing	5 sheet " " 1913	Certificate of Correction , 191
Photo Copy	, 191	Sept 28 1920 , 191
First Fee Cash	$15, July 14, 1913	$15, Mar. 22, 1918
" " Cert	, 191	, 191
Appl. filed complete	July 14 1913	Mar. 22, 1918

PARTS OF APPLICATION FILED.

Division of App., No. ..., filed ..., 191

Examined and Passed for Issue	April 7 1916	April 23, 1918
W. D. Grosbeck Exr. Div.	23	W. D. Grosbeck Exr. Div. 23
Notice of Allowance	APR 11 1916 , 191	May 1 , 1918
Final Fee Cash	, 191	4 $23 June 3 , 1918
" " Cert	, 191	, 191
Patented		July 2 , 1918

Attorney Pennie, Davis & Goldsborough #35 Nassau Street New York N.Y.

Associate Attorney

No. of Claims Allowed 31 Title as Allowed Sound-Regenerating Machine (Cl. ...)

D.T. Cl. 1-5

MEMORANDUM.

The first fee of $ 15 *, applied*

to the applicaiion of Marcus C. Hopkins

was included in composite letter No. .....

received July 14, 1913,

from Pennie, Davis & Goldsborough

which letter is on file in the Mail Room.

A. C. Cosden

Application Clerk.

6—1659

2836

TO THE COMMISSIONER OF PATENTS:

Your petitioner MARCUS C. HOPKINS, a citizen of the United States, residing at No. 2859 Boulevard, Jersey City, County of Hudson and State of New Jersey, and whose post-office address is No. 35 Nassau Street, New York City,

prays that Letters Patent may be granted to him for improvements in

SOUND REGENERATING MACHINE

as set forth in the annexed specification.

And he hereby appoints John C. Pennie and William H. Davis (constituting the firm of Pennie, Davis & Goldsborough, 35 Nassau Street, New York City), and each of them his Attorneys, with full power of substitution and revocation, to prosecute this application, to make alterations and amendments therein, to sign the drawings, to receive the Patent, and to transact all business in the Patent Office connected therewith.

Marcus C. Hopkins.

SPECIFICATION.

ALL WHOM IT MAY CONCERN:

BE IT KNOWN, That I, MARCUS C. HOPKINS, a citizen of the United States, residing at No. 2859 Boulevard, Jersey City, County of Hudson, State of New Jersey,

have invented certain new and useful improvements in

SOUND-REGENERATING MACHINE;

and I do hereby declare the following to be a full, clear and exact description of the invention, such as will enable others skilled in the art to which it appertains to make and use the same.

This invention relates to instruments which reproduce sounds, such as the talking machine and the phonograph, and is particularly directed to the attainment of a direct propagation in free air from a record of self-sustaining sound waves ~~in air from a record~~, as distinguished from an initial generation of violent air disturbances in a confined space ~~which would not be propagated as sound~~, and a subsequent transformation of such disturbances into self-sustaining sound waves by means of the megaphone or trumpet, commonly employed with most existing machines.

The device employed to propagate such regenerated ~~self-sustaining~~ sound waves in air from a record I herein term a "regenerator", and this device in the phonograph and talking machine comprises the "reproducer" together with the trumpet. The "reproducer" alone is incapable of generating such ~~"self-sustaining"~~ sound waves in air, and the violent air disturbances which are produced by its diaphragm, which and issue through its mouth piece, are almost immediately dissipated in heat or ~~of small actions and high tension~~ in waves which are not heard ~~or in heat, as is at once apparent~~ at any considerable distance if the horn be removed.

In the case of the "reproducer", ~~it would appear that~~ all of the energy received from the record issues from its mouth as relatively violent ~~high tension~~ disturbances, which are impressed upon a very small amount of free air quite incapable of conducting such disturbances ~~of such tension~~ without transformation losses, and the trumpet is resorted to, therefore into heat to resist transformation and control the lateral form of the wave during a progressive spreading action, which is accompanied by a lessening of the violence of the disturbance ~~tension~~, until a wave front

of great area is attained ~~with a tension~~ having movement appropriate to the sound conductivity of air. In this way it has been found practicable to transform a satisfactory part of the energy obtained from a moving record, into self-sustaining sound waves in air, but in every instance this method has been accompanied by distortions of the true recorded sounds in the reproducer, and more particularly in the trumpet, giving rise to those characteristic sounds, known as phonograph and horn sounds. These distortions of the true sound are in a measure impressed upon the record in its making, but are more noticeable in the reproduction where a suppression of character and overtones, the loss of "timbre" in instruments and the voice, and the accentuation of notes of certain pitch, so change the recorded number that a faithful reproduction is ~~comparatively unknown~~ not obtained.

It is an object of the present invention to regenerate the recorded sounds directly from the record, without the interposition of a confined body of air or the employment of a restrictive transformer, such as a horn and without

The "sound regenerator", in the case of the present invention, comprises a tympanum of relatively great area freely exposed to the air, in which the sounds are to be propagated, ~~as such,~~ and a mechanical transmission which faithfully transmits the vibrations produced by the record, to the tympanum, in such manner that the tympanum excites sound ~~waves of a proper~~ such as tension to be self-sustaining in air, to a body of air of sufficient bulk to receive as

sound waves a satisfactory amount of the available energy receivable from the record without undue wear of the record.

The invention consists in providing a tympanum of novel construction, which is capable of responding to the high frequency vibrations employed in the reproduction of sounds and imparting these vibrations to a large body of air; in providing a suitable mounting for this tympanum to permit it to exercise its function, and in providing a vibration transmission for receiving the vibratory movement from the record and transmitting this movement to the tympanum, without change of character and appreciable loss of energy. The invention also comprehends certain combinations of parts and details of construction and location hereinafter particularly described and specifically pointed out in the appended claims.

I have illustrated in the accompanying drawings a sound reproducing machine embodying the several novel features of the invention as they may be employed in regenerating sounds from records made with either laterally or vertically sinuous grooves.

In the drawings,

Figure 1 is a plan view of the machine with the cover raised.

Figure 2 is a vertical section on line 2-2 of Fig. 1, with cover and transmission arm raised.

Figure 3 is a vertical section on line 3-3 of Fig. 1 with cover closed.

Figure 4 is a vertical section on line 2-2 of Fig. 1 with cover closed and transmission arm in playing position.

Figure 5 is a longitudinal section through the transmission arm on line 5-5 of Fig. 4.

Figure 6 is a vertical longitudinal section through the transmission arm on line 6-6 of Fig. 5.

Figure 7 is a vertical section on line 7-7 of Fig. 6.

Figure 8 is an end view of the transmission arm.

Figure 9 is a cross-section on line 9-9 of Fig. 5, and

Figure 10 is a view similar to Fig. 8 of a modified arrangement for vertically sinuous records.

Referring to the drawings, the illustrated machine is mounted within a cabinet having a deck A upon which the motor and sound regenerator are supported. Side walls B downwardly extending from the edges of the deck A are preferably apertured on all sides and provided with open work grills C which afford substantially uninterrupted air paths for the sound waves from the interior of the cabinet in all directions laterally to the surrounding atmosphere. In the machine shown the cabinet is bottomless and provided with legs D at its four corners.

The motor may be of any suitable type, that shown having a frame E, spring drums e, winding gear e', spiral drive gear e'', high pitch spiral table shaft e''' and governor e''''. The frame E of the motor is secured against the under side of the deck A depending therefrom

and the table shaft projects upwardly through the deck A and carries the circular record table F above the deck. The motor frame E is preferably insulated from the deck A by rubber washers not shown.

The sound regenerator has a right-angled tubular support G, the vertical arm g of which has diametrically opposite conical depressions g' which are engaged by pointed screws h' which project inwardly from and are threaded through a ring h of larger internal diameter than the external diameter of the vertical arm g of the right-angled support G. The pointed screws h' engage the depressions g' forming a horizontal axis perpendicular to the horizontal arm g'' of the right-angled support G about which axis the arm g'' can swing in a vertical plane, the vertical arm g the while being inclined within the ring h. The ring h comprises the ring h proper and an annular retaining plate h'' screwed upon the lower face of the ring h, an annular groove at the junction of the ring h and plate h'' receiving the inner edge of a holding plate H in such manner that the ring h and the right-angled support G may be turned about a vertical axis in the holding plate H.

The holding plate H is clamped between two rubber or felt rings i, i', the lower ring i' resting upon the deck A. A ring I is placed upon the top of the upper ring i and screws i'' have their heads seated in the ring I and are screwed down into the deck A. The ring H and the rubber or felt rings i and i' have large holes through which the screws i'' pass, so that these screws do not

come into contact with the ring H and the right-angled support G is therefore entirely insulated from the deck A by the rubber or felt rings. The vertical arm g of the right-angled support G extends downwardly through an aperture in the deck A at a point near the periphery of the record table F. A conical spider J shown as having three arms has its hub j fitted to the lower extremity of the vertical arm g of the right-angled support G, and is secured thereon by a set screw j'. To the ends of the arms of the spider J is secured by screws an annulus consisting of two ponderous rings K,K' of metal, these two rings being clamped together by screws k spaced at short intervals. ~~The spider J is shown having three arms, two of which~~ are screwed tightly to the rings K,K' and the third is as tightly secured to said rings but by adjustable screws k', k'' arranged in such manner that the rings K, K' can be secured at varying distances from the foot of this third leg, there being sufficient spring in the spider legs to permit of an adjustment at this point of one-quarter of an inch or so, if desired. It will be seen that owing to the proximity of the mounting of the vertical arm g of the right-angled support G to the edge of the record table F, the spider J and the rings K,K' will underlie the record table and permit of a very compact arrangement of the working parts within the cabinet.

A tympanum L of light vibratile material has an annular plane peripheral portion 1, the outer edge of which peripheral portion 1 is tightly gripped between the

ponderous rings K,K', and a central conical portion 1' riding from the inner edge of the annular plane peripheral portion. If satisfactory regeneration of sounds from a record is to be had, the whole diameter of the tympanum, that is, the diameter of the aperture in the rings K,K', should exceed nine inches in order that the conditions shall be fulfilled ~~which are called for by the correlation~~ existing between the range of wave frequencies of the sounds which must be regenerated by a machine of this character and the wave tension called for by the sound conductibility of free air. The base of the central conical portion 1' of the tympanum should exceed in area one-half the effective area of the entire tympanum, that is, the area of the aperture in the rings K,K'; or in other words, the diameter of the base of said conical portion should be ~~substantially~~ at least eight-tenths of the diameter of the circular aperture in the supporting rings K,K'. The altitude of the conical portion 1' of the tympanum should be ~~substantially~~ at least one-quarter of the diameter of its base. It is, of course, possible to make some variation from the approximate sizes given without materially altering the result, but if the tympanum is made as shown in the drawings, any great variation from these proportions will be found to affect the character of the reproduction. It is of vital importance that the tympanum be made of crisp, strong material, having considerable rigidity within itself, and it is also of vital importance that the tympanum as a whole be extremely light and have as little inertia a

possible without a weakening effect. The tympanum is shown of conical form with a smooth surface, and this has been found to be very satisfactory. The conical shape is given the tympanum so that shocks or vibrations impressed upon the apex of the cone in a direction toward its base will move the whole cone bodily, the strains being imparted edgewise of the material and no wave motions being set up in the thin material of the cone. The curvature of the walls of the cone preclude the setting up of waves in the material and the intended object, a simultaneous movement of the whole conical portion of the tympanum, is attained. While I prefer to construct the tympanum in the form described and shown with a smooth surface, especially in view of the ease of construction, yet it is possible to form radial corrugations in the conical portion 1' and radial or concentric corrugations in the plane peripheral portion 1 and produce a light, stiff and very satisfactory article for the purpose. It is possible that when the tympanum is provided with corrugations as just suggested, some variation from the proportions above given may be found possible, and perhaps advisable, but such variations from the proportions given will not be great. The tympanum should preferably be constructed of a colloidal substance and should be from 3 to 20 thousandths of an inch in thickness according to the crispness or stiff character of the material used. Compressed fibrous material, such as hot pressed paper or fibre, has been found to act satisfactorily, ~~but I prefer to employ hard rubber or vulcanite, as it~~

is more easily handled, is less affected by weather conditions and lends itself to the production of a more finished commercial product. The hard rubber is pressed to shape while hot from the sheet and allowed to cool in the die. If a polished sheet has been used, the finished tympanum will have a beautifully polished appearance. It will be noted that the arms of the spider J incline downwardly to correspond with the conical shape of the tympanum L and that the apex of the conical portion of the tympanum is pointed upwardly toward the deck A of the cabinet, and that the concave side of the tympanum is open to the surrounding atmosphere through the open bottom of the cabinet, no obstructions being presented to the sound waves issuing from the concave surface of the tympanum. It is probable that various forms of cabinets will be devised for machines of this character, but in practically every case it may be assumed that one side of the tympanum will be directed toward some reflecting surface or portion of the cabinet or machine which will in a measure obstruct the sound waves issuing from the tympanum and in every such case the tympanum should have its convex side directed towards the obstruction and its concave side as open as possible toward the free air. This is suggested because the shape of the tympanum admits of a more intense pressive action in propagating a sound wave when a shock is applied to its apex in a direction toward its base than in the opposite direction.

A cap M is secured to the apex of the conical por-

a cap M is secured to the apex of the conical por-
l'
tion l' of the tympanum L, and this cap should be of more rigid construction than the remainder of the tympanum and should preferably be three-eighths of an inch or more in diameter. I prefer to make the cap M of metal, extremely light but very rigid, and in the form of two cones m, m' screwed tightly together upon opposite sides of the tympanum and gripping with their edges the material of the conical portion of the tympanum. In order that a tight and positive application of the cones forming the cap M to the conical portion of the tympanum may be had, it is preferable to form the cone m' of lesser angle than the conical portion of the tympanum, and the cone m of greater angle than the conical portion of the tympanum, in which case their edges will securely grip the tympanum material when they are secured together. The cap M is applied to the tympanum to receive the shocks which are to be applied to the tympanum as a whole, and convey them to sufficient of the material of the tympanum to insure the movement of the tympanum as a whole. This will be better understood, when it is considered that if the shock were applied to paper or hard rubber at a single small point, the inertia of the tympanum as a whole would be sufficient to resist the attack and the material would be distorted or dented at that point, the effect of the shock upon the tympanum as a whole being entirely lost. The cap M being of hard material such as metal will resist the bending action and distribute the shock to so much of the surface of the material of the tympanum as is capable of successfully resisting the shock, and it will

then be transmitted to the tympanum as a whole. The plane peripheral portion l of the tympanum maintains the place of the conical active portion of the tympanum and yields sufficiently to permit of the required motion of the conical portion, resisting, however, displacement of the conical portion in just that degree necessary to maintain the form and neutral postion of the active conical portion. Were the plane peripheral portion l of considerably greater width or markedly narrower than described, its function would be destroyed to a degree corresponding to the remoteness of the departure from the approximate proportion given and the effective portion of the conical portion of the tympanum would be proportionately lessened.

In the tubular arm g'' of the transmission support G are located two ponderous members or weights N and N'. These members N and N' are shown as insulated from the wall of the arm g'' by a tube o of insulating material, such as soft rubber or felt. One at least of the ponderous members N and N' must be movable relatively to the other and therefore it cannot be rigidly secured to the support G, and the insulating material becomes necessary to avoid rattling. I preferably insulate both of the ponderous members or weights N, N' from the wall of the transmission support G. Pins P projecting from the ponderous member N, and sliding in holes in the other ponderous member N', act as guides and prevent disalinement and angular displacement of the movable ponderous member. Knife edge fulcra n and n' are secured in and project from the ends of the ponderous members N and N', and in

the form of the device shown in Figs. 1 to 9 the fulcra n are arranged horizontally and the fulcra n' are arranged vertically. A lever Q is mounted on the fulcra n' and is capable of movement upon a vertical axis. A style holder q projects from the lever Q downwardly at an incline so that the point of a style q' held in the style holder is considerably removed from the axis of the lever Q and movement given the style q' by the record will effect an oscillation of the lever Q about its vertical axis upon the fulcra n'. The lever Q has arms q'' and q''' projecting from opposite sides thereof, the arm q'' being near the top of the lever Q and the arm q''' being near the bottom of said lever. The reason for this arrangement of the arms upon the lever will presently appear.

A lever R is mounted upon the fulcra n and oscillates upon a horizontal axis. This lever has arms r and r' extending upwardly and downwardly from its opposite sides, the arm r projecting from a point near one end of the lever R, and the arm r' projecting from a point near the other end of the lever R. It will now be seen that a point upon the arm r of the lever R is opposite a similar point on the ~~xxx~~ arm q'' of the lever Q and these two points are connected by rod link S. It will also be seen that a point upon the arm r' of the lever R is opposite a point upon the arm q''' of the lever Q, and these two points are connected by a rod link S'. The rod links S and S' have eye-ends arranged in planes removed 90° from one another, and these eye-ends s are engaged by pivot screws s' upon the arms of the levers Q and R. A parall

elogram is formed by the levers Q and R and the rod links S and S', and in the form just described, which is adapted for a laterally sinuous groove in the record, oscillation of the lever Q about a vertical axis will produce like oscillations of the lever R about a horizontal axis. Springs T preferably mounted upon the pins P press the ponderous members N and N' apart forcing the knife edge-fulcra n and n' tightly against the levers R and Q, and put the parallelogram of levers and links under tension, precluding any rattle or looseness of the levers upon the fulcra or of the eye-ends of the links upon their pivot screws, and as the movable ponderous member of the combination is insulated from the transmission support G, no rattle or displacement of the parts can take place when the record groove oscillates the lever Q, but such oscillation will be faithfully transmitted to the lever R. The ponderous members N and N' have clearance holes s'' for the rod links S and S'.

An arm U projects from the central portion of the lever R, and to its end is rigidly secured a rod V which extends downwardly through the interior of the arm g of the transmission support G, its lower end being rigidly secured to the cap M of the tympanum. The rod V is nicked or thinned at v close to the arm U of the lever R to permit of a slight springing action which compensates for the very slight angular motion of the arm U when the lever R is oscillated. It will now be seen that the oscillation of the lever R about its horizontal axis imparted to it from the lever Q, will effect an endwise

vibration of the rod V which is directly impressed upon the tympanum L. A cap W closes the opening at the angle of the transmission support G and the removal of this cap gives access to the working parts of the rear end of the transmission.

When a vertically sinuous record is employed the lever Q is mounted to oscillate about a horizontal axis, as shown in Fig. 10, no change in the lever R being required.

1. The combination of a direct sound regenerating machine and a cabinet therefor having apertures on all sides affording substantially free paths for the sound waves from the regenerator containing cavity of the cabinet to the surrounding atmosphere; substantially as described.

2. The combination of a direct sound regenerating machine with a bottomless cabinet containing said machine; substantially as described.

3. The combination of a direct sound regenerating machine and a cabinet containing said machine, said cabinet having an aperture leading from the regenerator-containing compartment to the surrounding atmosphere.

4. The combination of a cabinet and a direct sound regenerating machine mounted therein and insulated therefrom; substantially as described.

5. The combination of a cabinet having two compartments and a partition therebetween, of a record table and tansmission arm located in ons of said compartments and a tympanum located in the other of said compartments and connected with said transmission arm; substantially as described.

6. In a direct sound regenerating machine, the combination of a partition, a transmission arm supported on said partition to swing upon one side thereof and extending therethrough and a tympanum supported upon said transmission arm to swing upon the other side of said partition; substantially as described.

7. In a direct sound regenerating machine, the combination of a horizontal partition, a transmission support

mounted upon said partition to swing thereover and extending downwardly therethrough and a tympanum carried upon said support beneath said partition; substantially as described.

6

8. In a direct sound regenerating machine, the combination of a horizontal partition, a record holder mounted to rotate above said partition, a transmission support mounted upon said partition to swing above said record holder and extending downwardly through said partition and a tympanum carried by said support beneath said partition and under said record holder; substantially as described.

9. In a direct sound regenerating machine, the combination of a record holder, and a transmission support mounted to swing toward, from and across said record holder; substantially as described.

10. In a direct sound regenerating machine, the combination of a record holder, a transmission support mounted to swing over said record holder, and a tympanum carried by said support and extending under said record holder; substantially as described.

11. In a direct sound regenerating machine, the combination with a record holder, of a transmission support mounted to swing about vertical and horizontal axes, said support having an arm extended to move above and across said record holder having a free end and a second arm at the free end of which a tympanum carried by said second arm with its axis at an angle to said first arm; substantially as described.

12. In a direct sound regenerating machine, the combination of a bottomless cabinet supported upon legs and a downwardly directed tympanum mounted within said cabinet; substantially as described.

12. In a sound regenerating machine, a vibration transmission comprising two ponderous members, fulcra carried by said members, an articulate parallelogram having opposite sides mounted on said fulcra and means exerting pressure upon said ponderous members to place said parallelogram under tension; substantially as described.

13. In a sound regenerating machine, a vibration transmission comprising two ponderous members, fulcra carried by said members, an articulate parallelogram of non-extensible links and non-flexible levers, the levers of said parallelogram being mounted on said fulcra, and means exerting pressure upon said ponderous members to place said parallelogram under tension; substantially as described.

14. A sound regenerator for directly propagating self-sustaining sound waves in air, consisting of a ponderous support having a circular aperture, a light vibratile tympanum having its outer edge mounted on said support, said tympanum being shaped to provide an annular plane adjacant said support and a conical portion springing from the inner edge of said annular plane, and a cap of non-vibratile material rigidly secured to the apex of said conical portion of said tympanum; substantially as described.

15. A sound regenerator for directly propagating self-sustaining sound waves in air consisting of a ponderous support having a circular aperture, a light tympanum mounted upon said support in said aperture, said tympanum having a central conical portion the base of which exceeds in area one-half the effective area of said tympanum; substantially as described.

16. A sound regenerator for directly propagating self-sustaining sound waves in air, consisting of a ponderous

support having a circular aperture, a light vibratile tympanum exceeding nine inches in diameter having its outer edge mounted on said support, said tympanum being shaped to provide an annular plane adjacent said support and a conical portion springing from the inner edge of said annular plane, and a cap of non-vibratile material rigidly secured to the apex of said conical portion of said tympanum; substantially as described.

17. A sound regenerator for directly propagating self-sustaining sound waves in air consisting of a ponderous support having a circular aperture, a light vibratile tympanum mounted in said aperture and having its outer edge secured upon said support, said tympanum being shaped to provide an annular plane adjacent said support and a conical portion springing from the inner edge of said annular plane, the diameter of the base of said conical portion being substantially eight-tenths of the diameter of the said circular aperture in said support, and a cap of non-vibratile material rigidly secured to the apex of said conical portion of said tympanum; substantially as described.

18. A sound regenerator for directly propagating self-sustaining sound waves in air consisting of a ponderous support having a circular aperture, a light vibratile tympanum mounted in said aperture and having its outer edge secured to said support, said tympanum being shaped to provide an annular plane adjacent said support and a conical portion springing from the inner edge of said annular plane, the altitude of said conical portion being substantially one-quarter of the diameter of its base, and a cap of non-vibratile material rigidly secured to the apex of said conical portion of said tympanum; substantially as described.

20. A sound regenerator for directly propagating self-sustaining sound waves in air consisting of a ponderous support having a circular aperture exceeding nine inches in diameter, a light vibratile tympanum mounted in said aperture and having its outer edge secured to said support, said tympanum being shaped to provide an annular plane adjacent said support and a conical portion springing from the inner edge of said annular plane, the diameter of the base of said conical portion being substantially eight-tenths of the diameter of the said circular aperture in said support and the altitude of said conical portion being substantially one-quarter of the diameter of its base, and a cap of non-vibratile material rigidly secured to the apex of said conical portion of said tympanum; substantially as described.

21. In a sound regenerating machine, a vibration transmission comprising two ponderous members, fulcra carried by said members, an articulate parallelogram of links and levers, the levers of said parallelogram mounted upon said fulcra, pressure exerting means acting between said members and tending through said fulcra to hold said parallelogram under tension, and a style holder carried by one of said levers; substantially as described.

22. In a sound regenerating machine, a vibration transmission comprising two ponderous members, guides for maintaining the relative positions of said members, fulcra carried by said members, an articulate parallelogram of links and levers, the levers of said parallelogram mounted upon said fulcra, pressure exerting means acting between said members and tending through said fulcra to hold said parallelogram under tension, and a style holder carried by one of said levers; substantially as described.

15. 22 19

23. In a sound regenerating machine, a vibration transmission comprising two ponderous members, guides for maintaining the relative positions of said members, fulcra carried by said members, an articulate parallelogram of links and levers, the levers of said parallelogram mounted upon said fulcra, pressure exerting means acting between said members and tending through said fulcra to hold said parallelogram under tension, and a style holder carried by one of said levers; substantially as described.

16. 23 20

24. In a sound regenerating machine, a vibration transmission comprising two ponderous members, a vertical fulcrum on one of said members, a horizontal fulcrum on the other of said members, an articulate parallelogram of links and levers, the levers of said parallelogram mounted upon said fulcra, and pressure exerting means acting between said members and tending through said fulcra to hold said parallelogram under tension; substantially as described.

17 22 21

25. In a sound regenerating machine, a vibration transmission comprising two ponderous members, fulcra carried by said members, an articulate parallelogram of links and levers, the levers of said parallelogram mounted upon said fulcra, pressure exerting means acting between said members and tending through said fulcra to hold said parallelogram under tension, a style-holder carried by one of said levers, a direct sound regenerating tympanum connected to another of said levers and a pivoted support for said transmission and said tympanum; substantially as described.

25 24

26. 16. In a sound regenerating machine, a vibration transmission comprising a support, two ponderous members carried by said support, one of said members being movable upon said support, insulating material between said movable member and said support, fulcra carried by said members, an articulate parallelogram of links and levers, said levers being mounted on said fulcra and pressure exerting means acting between said members and tending through said fulcra to hold said parallelogram under tension; substantially as described.

26

27. In a sound regenerating machine, a tensioned vibration transmission, a style-holder upon one end of said transmission and an untensioned tympanum connected with the opposite end of said transmission; substantially as described.

27

28. The combination of a direct sound regenerating machine and a bottomless cabinet therefor, having apertures on all sides affording substantially free paths for the sound waves from the regenerator-containing cavity of the cabinet to the surrounding atmosphere; substantially as described.

19. 28 23

29. In a direct sound regenerating machine, the combination of a bottomless cabinet having apertures on all sides and a horizontal partition therein, a record holder mounted upon and above said partition, a motor for driving said record holder, a right angle transmission support mounted to swing upon horizontal and vertical axes upon said partition adjacent the periphery of said record holder, one arm of said support adapted to be swung over said record holder, and the other arm of said support extending downwardly through said partition, a vibration transmission ~~support~~ mounted within and insulated from said transmission support and comprising two ponderous members carrying fulcra,

a parallelogram of links and levers, said levers mounted upon said fulcra, pressure exerting means acting between said members and tending through said fulcra to hold said parallelogram under tension, a style-holder carried by one of said levers at the outer end of said transmission support, a spider mounted upon said transmission support below said partition, a ponderous tympanum support carried by said spider, a direct sound regenerating tympanum mounted upon said ponderous tympanum support, said tympanum being of light vibratile material and having a conical form throughout the greater part of its area and a ~~xxxxxxxxx~~ positive connection between the apex of the conical portion of said tympanum and the inner end of the parallelogram of the said vibration transmission; substantially as described.

Insert A3
No. 20 to 27

(X)

90

IN TESTIMONY WHEREOF I affix my signature, in presence of two witnesses.

Witnesses

M. A. Bill
Leon A. Rosenthal

Marcus C. Hopkins

OATH.

Filed 6100

STATE OF NEW YORK,
COUNTY OF NEW YORK. } ss:

MARCUS C. HOPKINS

the above-named petitioner, being duly sworn, deposes and says that he is a citizen of the United States, and resident of Jersey City, County of Hudson and State of New Jersey,

and that he verily believes himself to be the original, first and sole inventor of the improvement in

SOUND REGENERATING MACHINE

described and claimed in the annexed specification; that he does not know and does not believe that the same was ever known or used before his invention or discovery thereof, or patented or described in any printed publication in any country before his invention or discovery thereof, or more than two years prior to this application, or in public use or on sale in the United States for more than two years prior to this application; that said invention has not been patented in any country foreign to the United States on an application filed by him or his legal representatives or assigns more than twelve months prior to this application; and that no application for patent on said improvement has been filed by him or his representatives or assigns in any country foreign to the United States.

Marcus C. Hopkins

Subscribed and sworn to before me this 12th day of July 1913.

Filed 6500

M. A. Bill
(Signature of Notary Public.)

Div. 23 Room 379 — 2-930 — 167 — Paper No. 2-Rej.

Address only "The Commissioner of Patents, Washington, D. C."

All communications respecting this application should give the serial number, date of filing, and title of invention

JHY-Sut.

DEPARTMENT OF THE INTERIOR

UNITED STATES PATENT OFFICE

WASHINGTON Sept. 9, 1913.

Pennie, Davis & Goldsborough,

#35 Nassau St.,

New York, N. Y.

U.S. PATENT OFFICE, SEP 9 1913 MAILED

Please find below a communication from the ***EXAMINER*** *in charge of the application of*

Marcus C. Hopkins, for Sound Regenerating Machine, filed July 14, 1913, serial number 778,826.

E. B. Moore.

Commissioner of Patents.

In the preamble, line 5, a should follow "in".

The matter of the first page of the specification is objected to as lacking in clearness and inaccurate in part. It is not clear what applicant means in the first paragraph, but if he means that a sound box without the aid of a horn will not produce audible sound waves he is clearly wrong. Atention is directed to the common form of phonograph wherein ear-tubes of uniform diameter lead directly from the sound box. What does applicant mean by "self-sustaining sound waves"? The matter of line 15, and to "air" line 16, is objected to as incorrect. What does applicant mean by "high tension disturbances"?

e''' is e'' on figure 1. g'' is g' on figure 8.

Page 8, lines 7 and 8, why are no wave motions set up in the thin material of the cone?

A formal preamble to the claims should be inserted at the end of page 14.

Claims 1, 2 and 3 are rejected on Miller, June 20, 1905, 793,013, (181-3) or Simon, English patent, July 5, 1904, 15060, (181-3) figure 2. Any graphophone or grammphone of which the examiner

is aware is a "direct sound regenerating machine" within the ordinary import of the terms used.

Claim 4 is objectionable as claiming the insulation, matter not shown on the drawing. See rule 50.

Claim 4 is rejected on any cabinet talking machine in view of Aiken, Sept. 5, 1911, 1,002,479, (181-9) or Hough's English patent, April 16, 1907, 8833 (181-2).

Claim 5, line 3 "compartment" should be compartments.

Claim 5 is rejected on Shanks, May 29, 1906, 822,024, (181-3), Amet, June 23, 1896, 562,753, (181-7), Amet , June 23, 1896, 562,694, (181-7), Repp, Sept. 19, 1911, 1,003,655, (181-7) or Lumiere, Mar. 14, 1911, 986,477, (181-11), figure 7,mounted in any conventional cabinet as Skiff, Mar. 15, 1904, 754,508, (181-3), no invention being found in separating the record and diaphragm spaces by a partition, especially in view of Shields, June 12, 1900, 651,515, (181-2) or Welton, French patent, Feb. 1, 1906, 362,926, (181-3).

Claim 9 is rejected on Repp or Lumiere cited; also as met in terms in Dyer, Dec. 31, 1912, 1,049,215,(181-5), Pumphrey, May 14, 1912, 1,026,178,/(181-3) or Macdonald, May 10, 1910, 957,694, (181-3)

Claim 11, line 5, and should follow"arm."

Claim 11 is rejected on Sheble et al, May 3, 1910, 957,004, (181-3), 15 and 10 being the two arms.

Claim 12 is rejected on Rosenthal, English patent, Nov. 17, 1909, 26,738, (181-3)

Claim 15 is rejected on Kraemer, June 9, 1908, 890,142. (181-11).

Claim 16 is rejected on Kraemer; English, June 10, 1913,

1,064,062, (181-11); Edison, Feb. 22, 1910, 950,226, (181-10); Stroh, English patent, Feb. 16, 1901, 3393, (181-10); Brown, English patent, Jan. 16, 1911, 1157, (181-11) or Gaumont & Co. French patent, April 15, 1903, 331,226, (181-10).

Claim 17 is rejected on Kraemer. The size of the diphragm is not a patentable limitation.

Claim 18 is rejected as not sufficiently distinguished from Kraemer.

Claims 19 and 20 are rejected on Gaumont in view of Kraemer. Note the dimensions of the diaphragm in figure 2 of Gaumont. No invention is found in providing Gaumont's device with a contact piece as at 16 in Kraemer.

Claim 21, line 6, "member" should be members.

Claim 22, line 3, "position" should be positions.

Claim 24, line 5, "lever" should be levers.

Claim 27 is rejected on Gleason, Aug. 11, 1908, 896,006, (181-11-, figure 9, Johnson, Sept. 3, 1907, 865,105, (181-11) figure 5, or Gleason, April 16, 1907, 850,883, (181-11).

Claim 28 is rejected on Simon, Rosenthal or Miller, no invention being displayed over these structures.

J. S. Newton
Ex

L.H.S.

U.S. PATENT OFFICE
RECEIVED
DEC 26 1913
DIVISION 23

DIV 23 PAPER NO. 3

A

Div.23, Room 379,
Application of
Marcus C. Hopkins,
Sound Regenerating Machine,
Filed July 14, 1913,
No. 778,826.

New York City, N.Y., Dec. 5, 1913.

To the Commissioner of Patents:

Sir:

Replying to the office action of September 9, 1913, please amend the above entitled case as follows :-

In the preamble, line 5, insert "a" after "in".

In Fig.1 of the drawing, make "e'' " "e''".

In Fig.8 of the drawing, change "g'" to "g'' ".

At the end of page 14 insert:-

Having thus described my invention, what I claim and desire to secure by letters patent, is:-

Insert commas in the following places on page 1: line 2, after "sounds"; line 5, before "as"; line 9, after "trumpet"; line 16, before "and"; line 17, before "and"; line 18, after "piece"; line 19, after "waves"; line 21, after "reproducer"; line 23, a fter "disturbances"; line 24, after "air"; line 26, after "losses"; line 28, after "action"; line 29, after "tension"; and in the following places on page 2;- line 4, after"record"; line 5, after "air"; line 7, after "reproducer" and after "trumpet"; line 8, after "sounds"; line 10, after "making"; line 17, after "record"; line 19, after "transformer"; line 21, after "regenerator"; line 22, after "invention"; line 23, after "air"; line 25, after "record"; line "26, before

on page 3, as follows;- line 4, before "which"; line 6, after "sounds" and line 11. before"without".

Page 2, line 24, insert a semi-colon before "and".

Page 3, insert semi-colons after "air" in line 7 and after "function"in line 8.

Page 1, line 4, after "propagation" insert "in free air, from a record,".

Page 1, line 5, cancel "in air from a record".

Page 1, line 7, cancel "which would not be propagated as sound".

Page 1, line 17, after "and" insert "which".

Page 1, line 18, after "dissipated " insert "in heat or".

Page 1, line 19, after "waves" insert "of small volume and high tension".

Page 1, lines 19 and 20, cancel "or in heat, as is at once apparent" and substitute "at any considerable distance".

Page 1, lines 21 and 22, cancel "it would appear that".

Page 1, line 26, after "and" insert ", therefore,".

Page 2, line 1, substitute "having" for "with".

Page 2, line 17, cancel "comparatively unknown" and substitute "not obtained".

Page 2, line 18, cancel "or" and substitute "and without".

Page 2, line 23, cancel "the", first occurance, and substitute "unconfined".

Page 2, line 24, cancel "as such".

Page 2, line 25, change "vibration" to"vibrations".

Page 2, line 27,substitute"such a" for "a proper". and insert "as" after "tension".

Page 2, last line, change "to" first occurrence, to "in".

Page 3, line 2, after "wear" insert "of the record".

Page 3, line 6, before "imparting" insert "of".

It is believed that the foregoing amendments eliminate the reasons for objection as to lack of clearness and as to inaccuracy.

With reference as to what is meant on page 1 by "self sustaining sound waves", and by "high tension disturbances", it is pointed out that in ordinary phonographs or talking machines, a small diaphragm is mounted in a sound box containing a very small amount of confined air, and all of the energy of the record is projected against this small diaphragm, which is thus violently vibrated, thereby producing air disturbances of so high a tension, that these disturbances cannot, owing to the inertia of air, effect a movement of a sufficient volume of air to produce sound waves, which, after their production, will be self sustaining so as to carry to a considerable distance and produce sounds which correspond in character, timbre, volume and pitch ~~corresponding~~ to the original sounds which made the record, and which, therefore, are the original sounds regenerated.

Inasmuch as these high tension disturbances, which are produced by the small diaphragm in the confined air space of the sound box, cannot, owing to the inertia of air, produce sound waves of large area and of sufficiently low tension suitable for the sound conductivity of air, such sound waves will not be produced as correspond to the sounds which made the record. On the contrary, these high tension disturbances produced by the diaphragm will be squeaky, will have relatively high pitch, and will not be self sustaining so as to carry to any appreciable distance. It is for this reason that the horn or trumpet

is employed to effect a lateral control of these high tension disturbances, resist their transformation into heat and convert them into waves of sufficiently low tension and large volume to enable them to overcome the inertia of the air and thereby become self sustained.

But the use of the horn or trumpet amplifies the distortions produced by the small diaphragm being so violently agitated , and introduces distortions due to vibrations set up in the horn itself. The resultant sound waves are not true reproductions of the original sounds, but are the characteristic sounds known as "phonograph sounds."

In order to obtain faithful reproduction of the original sound waves , that is, to really regenerate the original sounds, applicant has provided a sound regenerating machine which dispenses with the employment of a horn or trumpet for transforming high tension disturbances into waves of lower tension, and in which the vibration of the stylus by the record are mechanically directly transmitted to a diaphragm which is free to vibrate in unconfined air, which has sufficient area to set in motion a large volume of air, which is sufficiently light and rigid to enable it to move in synchronism with the stylus, and the distance of vibration of which is sufficiently short to permit of a relatively slow movement appropriate for the sound conductivity of air, whereby the regenerated sounds will be self sustaining and will be accurate reproductions of the original sounds.

Applicant has thus produced a machine in which the sounds are regenerated directly from the record and in open and unconfined air, without the intervention of a sound box and its confined body of air, and without the intervention of any vibration transforming device, such as a

horn or trumpet.

So far as applicant is aware the machine of this invention is the first which has ever been constructed which will accurately regenerate the original sounds without distortion, without squeaking, without accentuation of notes of certain pitch, without change in intonation and without any appreciable loss of energy, and which in fact will produce faithful reproductions of the original sounds.

With reference to the statement in lines 7 and 8 of page 8 that no wave motions are set up in the material of the cone portion of the diaphragm, it will be noted that the lower end of the rod V is rigidly secured to the cap M which is secured to the apex of the cone L. The vibrations which are imparted to the cone L through the rod V are mechanical movements which are transmitted directly from the stylus by the levers Q and R and the rods S and S'. The cone L is therefore moved bodily to and fro and is not molecularly vibrated, the diaphragm not being under tension, as are the transmission rods just referred to. The examiner, of course, understands that the sides of a cone being straight, will not yield when a blow strikes the apex of the cone in the direction of the axis thereof. If the diaphragm were flat where it is connected to the rod V, there would be a local vibration set up in the immediate vicinity of the connecting rod, but a large part of the diaphragm would not be bodily moved, as is the case with the cone, and the resultant sounds would be very feeble, and would not compare in volume to thesounds which are produced by the cone of the applicant's machine. Applicant has demonstrated this practically by employing both flat and conical diaphragms.

With reference to claims 1, 2 and 3 which have been rejected on the patent to Miller No. 793,013,or on the patent (British) to Simon, it will noted that each of these devices has a small diaphragm located in a sound box provided with a horn and is not a direct sound regenerating machine, in which the regenerated sounds are effected without the intervention of a transforming trumpet or horn , as in applicant's structure.

With machines having sound boxes and horns, it is not material that the cabinet has apertures on all sides, as set forth in claim 1;nor whether it has no bottom as set forth in claim 2. On the other hand it is of great importance that the cabinet,which contains a direct sound regenerating machine having a diaphragm which impresses its vibrations upon unconfined air, shall have an aperture leading to the surrounding atmosphere, as in claim 3; having no bottom as in claim 2, or having apertures on all sides serving for free path for the sound waves from the compartment containing the regenerator to the surrounding atmosphere, as in claim 1. In machines having sound boxes and horns it is only required that the horn communicate with the outside atmosphere.

The references do not disclose any direct sound regenerating machine mounted in a cabinet, so that it is believed that the patent to Aiken, No. 1,002,479, or the British patent to Hough,No. 8833, of 1907, which show insulation between a machine and a table, the machines being of the ordinary sound box type do not apply to claim 4, which combines a direct sound regenerating machine with a cabinet in which the machine is mounted and from which it is insulated.

As to claim 5,the provision of a partition between the record table and the tympanum effects a variety of

functions. It provides a support for the machine, serves as a guard for the protection of the diaphragm , which in a machine of this character must be large, exposed to the open air and is liable to injury. At the same time it serves the commercial purpose of enabling a user of a the machine to readily put on or take off a record without danger of injury to any of the delicate parts. In the ordinary sound box machine the diaphragm is protected, is close to the record and requires no supporting and protecting partition. None of the references discloses a record table and transmission arm in one compartment and a tympanum located in the other compartment, as specified in claim 5. In the French to Welton, No. 362,926 and the patent to Shields, No. 651,515, cited to show a partition separating ~~the record and~~ the record table and the diaphragm, the record and the diaphragm are both in the same chamber. In neither one of these devices is there any partition between the record table and the tympanum, All that these two devices show,with reference to a partition is a trumpet leading from one chamber to the outside thereof.

Cancel "compartment" and substitute "compartments" in line 3 of claim 5. Insert a comma before "of" in line 2 of said claim.

Cancel claim 9.

Claim 10, line 1 insert a comma after"machine". Insert a comma after "support" in line 3.

Claim 11,insert a comma after"machine"line 1, and after "holder", line 2. Line 5 after "and" insert "adapted to carry a stylus, the support having". Same line,before " a tympanum" insert"and" Same line cancel "by" and substitute "at the free end of".

Claim 11, as amended, distinguishes from the patent to Sheble et al, cited, in being restricted to a direct sound regenerating machine, with the diaphragm carried at the free end of the second arm, while in the reference the diaphragm is carried at the junction between the arms and the machine is of the sound box type having a transforming horn.

The British patent to Rosenthal No. 26, 738 is not a direct sound regenerating machine, as specified in claim 12 but is a sound box machine having a horn, which closes an opening in the bottom of the cabinet and the tympanum is not directed downwardly as in applicant's construction. In the reference the diaphragm is not free to vibrate in the open air and direct sound waves unrestricted and without transformation through an opening in the bottom of the cabinet.

Each of the claims 15 to 20 inclusive is drawn to the combinations of elements therein set forth as combined in a sound regenerator for directly propagating self sustaining sound waves in air. Each of the devices of the references is an ordinary reproducer having a small diaphragm operating in a sound box having a small volume of confined air, and requiring, in order to set up self sustaining waves, the intervention of a transforming device, such as a horn or trumpet, to change the high tension vibrations into lower tension waves of greater amplitude. No one of the diaphragms described and illustrated in the said references can be employed to directly propagate and regenerate the original sounds, but ,the sounds produced therewith will be of high pitch and of so great a tension that the disturbances will not set up self sustaining waves in the air , for the reasons hereinbefore given.

For these reasons the references cited against claims 15 to 20 inclusive do not meet the claims. With reference to claims 17 which specifies a tympanum exceeding 9 inches in diameter, it is submitted that the size of the tympanum is what enables it to effect direct regeneration of the sound. When a horn is employed for transforming high tension disturbances, the size of the tympanum is immaterial. Applicant has practically demonstrated that, to effect direct regeneration from the record of the sounds, a light, vibratile tympanum of substantially 9 inches in diameter or greater must be employed in order to obtain faithful reproductions. With respect to claim 15, there is no apex to the diaphragm of Kraemer, No. 390,142, the plate 16, Fig.3, being secured to the flat central portion of the diaphragm, which is not a cone as in applicant's construction, but is a frustum of a cone with a flat top, which is considerably larger than the metal plate 16. With a diaphragm of this kind , the center will yield and produce local disturbances. Furthermore the conoidal portion of the Kraemer device, not terminating in an apex, and the plate 16 not reaching to the conoidal portion , said conoidal portion will not be moved bodily to the same extent as would be the case if the metal plate were secured to an apex, as in applicant's construction.

As has already been pointed out, the Kraemer device is a sound box employing a horn and cannot directly regenerate self sustaining sound waves without the employment of the trumpet, while claims 15 to 20 inclusive are drawn to a direct sound regenerator.

Claim 18 distinguishes from Kraemer in the same manner as does claim 15, the cap being secured to the apex of a cone, while in the Kraemer device the cap is secured to the flat top of the frustum of a cone, the top being

of greater diameter than the cap.

Claims 15, 17, 18, 19 and 20 each distinguishes from Kraemer in the cap being secured to the apex of a cone.

The dimensions of the diaphragm and of the conical portion thereof, as set forth in claims 15 to 20 inclusive, are essential elements in a direct sound regenerator, but they are not essential in sound boxes which employ horns or trumpets as do all of the references which have been cited against these claims. This has been demonstrated by the applicant by actual trial.

For the foregoing reasons it is submitted that claims 15 to 20 inclusive are not met by the references.

Claim 16, line2, change "og" to "of".

Claim 21, line 6, change"member" to "members".

Claim 22, line 3, change"position" to "positions".

Claim 24, line 5, change "lever" to "levers".

Claim 26, last line, change "tention" to "tension".

Claim 27 distinguishes from the references in being drawn to a structure having an untensioned diaphragm, while the devices of the references have tensioned diaphragms as set forth in lines 15 to 18, page 1 of the Gleason patent, No. 850,883. Claim 27 further distinguishes in the untensioned diaphragm being connected at the end of the tensioned transmission, while in the references the diaphragm is connected intermediate of the ends of the tensioned members.

In the Gleason and Johnson patents, the tension serves only to retain the knife edges seated, and the tension serves to resist the vibration of the stylus. In applicant's structure, the tension does not interfere at all with the free vibration of the stylus, but is in a direction parallel with the direction of movement of the stylus. For this reason the tympanum is connected at one end of the

tensioned transmission, in applicant's structure, instead of intermediate of and at right angles to the direction of tension as in the devices of the references.

With reference to claim 28 rejected on Simon, Miller or Rosenthal, it will be noted, as was stated with reference to claims 1 to 3, that the references are all sound box machines which require horns to regenerate the sound waves, and in such structures it is not material whether or not the cabinet is bottomless and has apertures in all of its sides for affording free paths for sound waves to the surrounding atmosphere, as set forth in claim 28, but it is of importance in a direct sound regenerating machine, for the success of such a machine is dependent upon the free vibration of a large diaphragm in unconfined air.

Furthermore, none of the references is provided with a bottomless cabinet nor with apertures on all sides, as set forth in the claims. Simon's machine rests on a table or base, and is not provided with any cabinet. The cabinets of Rosenthal and Miller have no openings on all sides, and each has a bottom provided with an opening which is closed by a horn.

Relative to the criticism in connection with claim 4, that the drawings do not illustrate insulation between the regenerator and the cabinet, attention is directed to Fig.3, in which there is shown insulation i' between the regenerator and the cabinet.

For the foregoing reasons favorable reconsideration of the rejected claims is requested.

Change the ordinals of claim 10 and the claims following.

20. Please add to the claims the following claims :-

24 "30. In a sound regenerating machine, a tympanum, a vibration transmission tensioned in the direction of its vibration independently of the tympanum and connected therewith, and a style holder connected with said transmission.

25 "31. In a sound regenerating machine, an untensioned tympanum, a vibration transmission tensioned in the direction of its vibration and connected with said tympanum, and a style holder connected with said transmission .

26 "31. In a sound regenerating machine, a tympanum, an oscillatory transmission member connected therewith, a style holder for oscillating the transmission member, and means independent of the tympanum for tensioning the transmission member in the direction of its oscillatory movement.

27 23 "32. In a sound regenerating machine, a tympanum, an oscillatory transmission member connected therewith, a style holder for oscillating said member, and means independent of the tympanum for yieldingly imparting a tension to said member in the direction of its oscillatory movement .

28 "33. In a sound regenerating machine, an untensioned tympanum, a transmission member connected therewith and adapted for oscillation, a style holder for oscillating said member, and means for imparting a tension to said member in the direction of its oscillatory movement

24.

cl. 25 follows

"34. In a sound regenerating machine, a tympanum, an oscillatory transmission member connected therewith, a style holder for oscillating said member, and means for tensioning said member without affecting its freedom of movement ."

"35. In a sound regenerating machine, a style holder, a tympanum, and transmission means under tension connecting the style holder and tympanum, the freedom of movement of the style holder being unaffected by said tension."

"36. In a sound regenerating machine, an oscillatory style, a tympanum, and longitudinally rigid transmission means connecting the style and tympanum and arranged to impart to the tympanum vibrations which have less length than the vibrations of the style."

"37. In a sound regenerating machine, an oscillatory style, a tympanum, and tensioned transmission means connecting the style and tympanum and arranged to impart vibrations to the tympanum which have less length than the vibrations of the style."

"38. In a sound regenerating machine, an oscillatory style, a tympanum, and tensioned transmission means connecting the style and tympanum and arranged to impart vibrations to the tympanum having less length than the vibrations of the style, the tension of the transmission being in the direction of its vibration."

"39. In a sound regenerating machine, a tympanum having a free area exceeding nine inches in diameter and having a portion substantially eight-tenths of the diameter of said free area which is rigid in the direction of the axis of the tympanum."

"40. In a sound regenerating machine, a tympanum having a free area exceeding nine inches in diameter and having a central portion substantially eight-tenths of the diameter of said free area."

~~41.~~ In a sound regenerating machine, a tympanum having a free area exceeding nine inches in diameter and having a conical portion substantially eight-tenths of the diameter of said free area, the altitude of said conical portion being substantially one-quarter of the diameter of its base."

"42. In a sound regenerating machine, an oscillatory style, a tympanum having a relatively rigid vibratory portion, and longitudinally rigid transmission means connecting the style and the rigid portion of the tympanum and arranged to impart vibrations thereto having less length than the vibrations of the style."

"43. In a sound regenerating machine, an oscillatory style, a tympanum having a conical vibratory portion, and transmission means connecting the style with said conical portion and arranged to impart thereto vibrations having less length than the vibrations of the style."

"44. In a sound regenerating machine, a style holder, a tympanum having a relatively rigid vibratory portion, and a tensioned transmission connecting the style holder with said rigid portion, the freedom of movement of the style holder being unaffected by the tension of the transmission.

"45. In a sound regenerating machine, a style holder, a tymparum having a conical vibratory portion, and a tensioned transmission connecting the style holder and said conical portion, the freedom of movement of the style holder being unaffected by the tension of the transmission."

~~46.~~ In a sound regenerating machine, a style holder, a tympanum having a rigid vibratory portion, and a tensioned transmission connecting the style holder with said rigid portion, the tension of said transmission being in the direction of its vibration and independant of the tympanum.

"47. In a sound regenerating machine, a style holder, a tympanum having a conical vibratory portion, and a tensioned transmission connecting the style holder with said conical portion, the tension of said transmission being in the direction of its vibration."

"48. In a sound regenerating machine, a style holder, an untensioned tympanum having a rigid vibratory portion, and a tensioned transmission connecting the style holder with said rigid portion."

"49. In a sound regenerating machine, a style holder, an untensioned tympanum having a conical vibratory portion, and a tensioned transmission connecting the style holder with said conical portion."

"50. In a sound regenerating machine, a style, a tympanum, and longitudinally rigid transmission means connecting the style and tympanum and having means for imparting vibrations to the tympanum having no greater length than the vibrations of the style."

"51. In a sound regenerating machine, a style, a tympanum , and tensioned transmission means connecting the style and tympanum and having means for imparting vibrations to the tympanum having no greater length than the vibrations of the style."

"52. In a sound regenerating machine, a style, a tympanum, and tensioned transmission means connecting the style and tympanum and having means for imparting vibrations to the tympanum having no greater length than the vibrations of the style, the tension of said transmission being in the direction of its vibration."

"53. In a sound regenerating machine, a style, a tympanum, and tensioned transmission means connecting the style and tympanum, and having means for imparting vibrations to the tympanum having no greater length than the vibrations of the style, the tension of said transmission being independent of the tympanum."

"54. In a sound regenerating machine, a style, a tympanum, and tensioned transmission means connecting the style and tympanum and having means for imparting vibrations to the tympanum having no greater length than the vibrations of the style, the tension of said transmission being in the direction of its vibrations and independent of the tympanum."

"55. In a sound regenerating machine, a style, an untensioned tympanum, and transmission means connecting the style and tympanum and having means for imparting vibrations to the tympanum having no greater length than the vibrations of the style."

"56. In a sound regenerating machine, a style, an untensioned tympanum, and tensioned transmission means connecting the style and tympanum and having means for imparting vibrations to the tympanum having no greater length than the vibrations of the style."

"57. In a sound regenerating machine, a tympanum having a conical vibratory portion adapted to be vibrated from a record, the tympanum having a vibratile area of sufficient size to effect, without amplification, the regeneration from the record of sound waves of relatively large volume and carrying power."

"58. In a sound regenerating machine, a style, a tympanum and longitudinally rigid transmission means connecting the style and tympanum and having means for impart-

ing vibrations to the tympanum having no greater length than the vibrations of the style, the tympanum having a vibratile area of sufficient size to effect, without amplification, the regeneration of sound waves of relatively large volume and carrying power."

"59. In a sound regenerating machine, a style, a tympanum, and longitudinally rigid transmission means connecting the style and tympanum and having means for imparting vibrations to the tympanum having less length than the vibrations of the style, the tympanum having a vibratile area of sufficient size to effect, without amplification, the regeneration of sound waves of relatively large volume and carrying power."

"60. In a sound regenerating machine, a tympanum having a rigid vibratory portion adapted to be vibrated from a record, the tympanum having a vibratile area of sufficient size to effect, without amplification, the regeneration from the record of sound waves of relatively large volume and carrying power, and longitudinally rigid means connected with said rigid portion for transmitting thereto vibrations of a style."

"61. In a sound regenerating machine, a tympanum having a conical vibratory portion adapted to be vibrated from a record by a style, the tympanum having a vibratile area of sufficient size to effect, without amplification, the regeneration from the record of sound waves of relatively large volume and carrying power, and transmitting means connected with said conical portion and adapted to be actuated by a style."

"62. In a sound regenerating machine, a tympanum having a vibratile area of sufficient size to effect, without amplification, the regeneration from a record of sound waves of relatively large volume and carrying power, and tensioned vibration transmitting means connected to the tympanum and adapted to be actuated by a style, the tension thereof not extending to the tympanum."

"63. In a sound regenerating machine, a tympanum having a vibratile area of sufficient size to effect, without amplification, the regeneration from a record of sound waves of relatively large volume and carrying power, and tensioned vibration transmitting means connected to the tympanum and adapted to be actuated by a style, the tension of the transmission being in the direction of its vibration and not extending to the tympanum.

"64. In a sound regenerating machine, a tympanum having a rigid vibratory portion, the tympanum having a vibratile area of sufficient size to effect, without amplification, the regeneration from a record of sound waves of relatively large volume and carrying power, and tensioned vibration transmitting means connected to said rigid portion and adapted to be actuated by a style, the tension thereof not extending to the tympanum."

"65. In a sound regenerating machine, a tympanum having a conical vibratory portion and having a vibratile area of sufficient size to effect, without amplification, the regeneration from a record of sound waves of relatively large volume and carrying power, and tensioned vibration transmitting means connected to said conical portion and adapted to be actuated by a style."

"66. In a sound regenerating machine, a style holder having an axis which, when the style carried thereby is in operative contact with the record, is substantially perpendicular to the record."

"67. In a sound regenerating machine, a style holder having an axis which, when the style carried thereby is in operative contact with the record, is substantially perpendicular to the record, the style holder having means for holding the style at an inclination to the axis."

Claims 29 to 33 and 38, 46, 47, 52, 54 and 63 distinguish from the references in the tension of the transmission being in the direction of the vibration thereof. By this construction the freedom of movement of the transmission by the style is not affected. In the devices of the Gleason and Johnson, cited as showing tensioned transmission the tension is in a direction transverse to the vibrations of the style. It will be understodd that in such constructions the tension of the transmission resists free movement of the style.

Claims 34, 35, 44, 45, 46 ~~xxx xx xx xx~~ inclusive distinguish from the references in the feature of the tension of the transmission means not interferring with the free movement of the style. As above stated, the tension of the Gleason and Johnson devices does interfere with the free movement of the style.

Claims 30, 33, 48, 49, and 56 distinguish from the references in the combination with a tension transmission of an untensioned tympanum. In the references having tensioned transmission, the tympanum is tensioned thereby.

Claims 31, 32, 46, 53, 54, 62, 63 and 64 distinguish from the references in the tensioned transmission which does not extend to the tympanum. This is also true of claim 29.

Claims 36, 37, 38, 42, 43 distinguish from the references in the arrangement by which the tympanum has a less length of vibration than the style. In the references the leverage is the other way, the style holder being pivoted with the style at the shorter end of the lever, whereby the length of vibration of the diaphragm is greater

than the length of vibration of the style. This makes great wear on the record and distorts the sound waves.

With small diaphragms, such as are used in sound boxes, a large amount of vibration is imparted to the diaphragm to compensate for the small amount of air moved. Such a large movement of the diaphragm produces high tension disturbances due to the rapid movement of the diaphragm in its traveling the distance which it is required to travel during each vibration. The inertia of the air prevents its partaking bodily of these high tension disturbances so it becomes necessary to confine them and transform them, by means of a trumpet, into waves of less tension and larger volume to which the air can respond and thereby produce waves of large volume and carrying power and which are self sustaining.

Applicant eliminates the production of high tension disturbances which require transformation by a horn, and employs a diaphragm having a vibratile area of sufficient size and small range of movement to effect, when vibrated, the regeneration directly, without amplification, and without the use of a horn or sound box, waves which are self sustaining by reason of their large volume and carrying power. The employment of a large diaphragm moved but a small distance in each vibration reduces the distortions, and permits the style to exert great leverage in vibrating the diaphragm, thereby reducing the wear on the record.

What is meant by "high tension disturbances" may be illustrated as follows:- If a paddle be moved flatwise rapidly back and forth in water, at a rate of speed such that the inertia of the water will not permit it to respond, only violent local disturbances will be produced which will not carry to any considerable distance. On the other hand if the paddle be larger and of considerable area and be

moved back and forth slowly enough for the water to respond, waves of large volume and carrying power will be produced. These two instances, of the use of the small paddle moved rapidly to and fro for a considerable distance and thereby producing only local disturbances, not capable of generating waves of large volume and carrying power; and the use of a large paddle moved a less distance in the same length of time, and therefore more slowly, and generating waves of large volume and great carrying power, are analagous respectively to the small violently agitated diaphragm of the ordinary sound box and horn phonograph, and applicant's structure, which employs a large relatively slow moving and slightly vibrated diaphragm, which vibrates in unconfined air, thus generating sound waves which are"self sustaining", and which eliminates the sound box and horn and the distortions which accompany their use.

Claims 50 to 56 inclusive and 58, 59 and 60 distinguish from the references in the transmission means which imparts vibrations to the tympanum of no greater length than the vibrations of the style.

Claims 39, 40,41, 57 61 and 65 distinguish from the references in the conical tympanum having a vibratile area of sufficient size to effect, without amplification, the regeneration from the record of sound waves of large volume and carrying power. Each of the references having a conical diaphragm, is of the sound box type having a small tympanum with a range of vibrations greater than that of the stylus and which requires a sound box and horn to transform the high tension disturbances produced into waves to which the air can respond.

Claims 36, 42, 50, 58, 59 and 60 distinguish from the references in the transmission means being longitudinally rigid. This feature is of great importance in direct sound regenerating machines, where the reduction in length of vibration of the tympanum, relative to the stylus, is effected, as specified in the first five of these claims. By having a longitudinally rigid transmission, the vibrations from the style are transmitted to the diaphragm without loss by means of loose joints or by absorption, as would occur with a longitudinally flexible transmission.

Claims 66 and 67 distinguish from the references in the axis of the style holder being substantially perpendicular to the record, when the style is in the operative position on the record. In the references, the axes are either parallel with the surface of the record, or disposed at an inclination thereto. By having the axis substantially perpendicular, the style travels in a plane transversely in the record groove, which is the proper movement, instead of moving in a curve transversely in the record, as it does in the devices of the references.

For the foregoing reasons favorable reconsideration of the rejected claims, and favorable consideration of the new claims is requested.

Annexed hereto find supplemental Oath .

Respectfully submitted,

Pennie Davis Goldsborough

Attorneys for Marcus C. Hopkins.

SUPPLEMENTAL OATH.

State of New York, :
: ss.
County of New York.:

Marcus C. Hopkins, whose application for letters patent for an improvement in Sound Regenerating Machines, serial number 778,826, was filed in the United States Patent office on or about the 14th day of July, 1913, being duly sworn deposes and says that the subject matter of the foregoing amendment was part of his invention, was invented before he filed his original application, above identified, for such invention, was not known or used before his invention, was not patented or described in a printed publication in any country more than two years before his application, was not patented in a foreign country on an application filed more than twelve months before his application, was not in public use or on sale in this country for more than two years before the date of his application, and has not been abandoned.

Marcus C. Hopkins.

Subscribed to and sworn before me this 22 day of December, 1913.

M. A. Bill

Notary Public for and in
Kings County, New York.
Certificate filed in N.Y. Co.
Notary No. 48.

Div. 23 Room 379
Address only
"The Commissioner of Patents,
Washington, D. C.,"
and not any official by name.

2

Paper No. 4
All communications respecting this application should give the serial number, date of filing, title of invention, and name of the applicant.

DEPARTMENT OF THE INTERIOR

UNITED STATES PATENT OFFICE

LCE-Su WASHINGTON Feb. 7, 1914.

Pennie, Davis and Goldsborough,
35 Nassau Street,
New York, N. Y.

U. S. PATENT OFFICE, FEB - 1914 MAILED.

Please find below a communication from the **EXAMINER** *in charge of the application of*

Marcus C. Hopkins, for Sound Regenerating Machine, filed July 14, 1913, Serial No. 778,826.

Thomas Ewing
Commissioner of Patents.

c 6-8631

In response to amendment of Dec. 24, 1913.

"e'''" has been changed on Fig. 1 to e''', instead of as directed on page 1 of the above noted amendment.

Page 1, lines 15 and 16, "the ----air" is objected to as not true as broadly as stated, for the reasons of record. What authority has applicant for the use of "high tension" and "low tension" in connection with sound waves?

Claim 1 is rejected on Miller or Simon of record for the reasons of record, as not distinguishing therefrom. "Direct sound regenerating machine" is held to be too vague and indefinite to distinguish from the ordinary talking machine which is broadly such a machine. Nor is invention found in mounting Lumiere of record in a cabinet with provision for sound outlet on all sides, if such is desired.

Claim 2 is rejected on the references and the reasons of record; also as involving no invention in mounting Lumiere in a bottomless cabinet.

Claim 3 is rejected on the references and reasons of record; and also on Lumiere mounted in any conventional cabinet as Skiff et al., of record.

Claims 4 and 5 are rejected on the references for the reasons of record.

Claim 6 is rejected as specifying only

Johnson, 1,015,321, Jan. 23, 1912, (181-3), note 12,

with the end partition extended to separate the record compartment from a sound conduit compartment, as in Shields or Welton of record, or in

German patent, 220,412, Mar. 26, 1910, (181-3).

Claim 7 is rejected as specifying no more than the device in

Persichetti, French patent, 397,609, May 13, 1909, (181-3), with a diaphragm at the mouth of the horn as in

Szek et al., English patent, 8,011, Apr. 3, 1906, (181-27).

Claims 8 and 9 are rejected on Persichetti and Szek, no invention being found in flaring the mouth of the horn in the former as in the latter.

Claim 10 is objectionable in that it is not positively expressed that the second arm has a free end. Claim 10 is rejected on Johnson above cited. 4 and 7 are the two arms. It is patentably immaterial whether 12 is carried by 7 or 8.

Claim 11 is rejected on Rosenthal of record.

Claims 12 and 13 are allowed.

Claim 14 is rejected as no invention is found in interposing any of the common non-vibratile members employed in this art between the diaphragm and stylus bar as in

Kraemer,	883,490,	Apr. 21,	1908,	(181-11),
Montgomery.	652,800,	July 3,	1900,	" "
Hill,	668,183,	Feb. 19,	1901,	(181-10), or
Berliner,	534,543,	" "	1895,	(181-3)

between the diaphragm and stylus bar of any such structures as in Gaumont, English, Edison, Browne, or Stroh, all of record.

Claim 15 is rejected on the references and for the reasons of record.

Claim 16 is rejected on the references and reasons of rejection of claim 14. The size of the diaphragm is held not a patentable limitation. Note, however, that Lumiere discloses a diaphragm exceeding nine inches in diameter.

Claims 17, 18 and 19 are rejected upon Gaumont of record, in connection with the considerations above given.

Claims 20 to 25 inclusive are allowed.

Claim 26 is rejected on the references of record. As the tension means acts in the plane of the bar and in the direction of the fulcrum, it is believed it will not tension the diaphragm in these several structures. This claim is also rejected on

English, 940,795, Nov. 23, 1909, (181-11), note spring 22.

Claim 27 is rejected on the references of record and also on the additional grounds of rejection of claims 1 and 2.

Claim 28, line 5, "angle" should be -angled-. This claim is otherwise allowable.

Claims 29 to 33 inclusive, 46, 54, and 63 are allowable, as at present advised.

Claims 34, 35, 44 and 45 are objectionable as inaccurately descriptive in the statement that the freedom of movement of the stylo holder is unaffected by the tension of the transmission. The friction of the moving parts will obviously be increased with the pressure.

Claims 34, 35 and 44 are rejected on the grounds of rejection of claim 26.

Claims 36 and 55 are rejected on any of the following references:

Edison,	703,774,	July 1, 1902,	(181-10),		
Betzold,	633,226,	Sept. 19,1899,	(181-11),		
Jones,	750,460,	Jan. 26, 1904,	"	"	Figs. 1 to 3,
Schwartz,	875,853,	" 7, 1908,	"	"	or
German patent,	183,685,	Apr. 25, 1907,	"	"	

Claims 37, 51, 53 and 56 are rejected on the references last cited in view of the references cited against claim 26.

Claim 38 is rejected as no invention is found in tensioning the transmission in any of the references cited against claim 36, in view of the cited art. Thus no invention is found in tensioning Jones' stylus bar as in

Berens, 890,754, June 16, 1908, (181-11).

Claims 39, 40 and 41 are rejected on Gaumont or English, 1,064,062, in view of Lumiere, the selection of the particular dimensions being held not a matter of invention in the absence of a showing of novel results arising from the particular dimensions and such as could not be obtained by the ratio of dimensions of the references.

Claims 42 and 43 are rejected on Gaumont or English last cited in view of the references cited against claim 36.

Claim 45 is rejected on any of the references cited against claim 26 in view of any conical diaphragm in the art.

Claim 47 is rejected on any conical diaphragm as in Caumont or English, 1,064,062, in view of any such tension means as in Berens.

Claims 48 and 49 are rejected on any conical diaphragm mounted in the references cited against claim 26.

Claim 50 is rejected on any of the references cited against claim 36 or

Edison, 705,829, July 29, 1902, (181-11).

Claim 52 is rejected on any of the references cited against claim 36, in view of any such tension means as in Berens.

Claim 57 is rejected on Lumiere; also on any conical diaphragm cited in view of Lumiere.

Claim 58 is rejected on the grounds of rejection of claim 57, the longitudinally rigid transmission means being the common form in this art, as in references cited, and no invention being found in actuating any of the cited diaphragms by such means.

Claim 59 is rejected on the references and the reasons last given, no invention lying in using a reducing lever in view of the art cited against claim 36.

Claim 60 is rejected on any conical diaphragm as English, 1,064,062, in view of Lumiere.

Claim 61 is rejected on the grounds given against claim 57.

Claim 62 is rejected on Lumiere in view of any of the references cited against claim 26.

778,826,--5

Claims 64 is rejected on the grounds of rejection of claim 60 in view of any of the references cited against claim 26.

Claim 65 is rejected on the grounds of rejection of claim 64, or on the grounds of rejection of claim 60, in view of any of the tensioning means cited.

Claims 66 and 67 are rejected on

Shue, 842,028, Jan. 22, 1907, (181-11),
English, 1,001,004, Aug. 22, 1911, " " or
Lyons, English patent, 15,675, June 29, 1910, (181-11).

The claims in this case are many times too numerous for the scope of applicant's invention, and should be reduced to not over twenty.

L.H.S.

H. D. Crossbrook, Exr.

Div. 23 - Room 379

FEB 6 1915

UNITED STATES PATENT OFFICE

Application of MARCUS C. HOPKINS,
Filed July 14, 1913,
Serial No. 778,826
SOUND REGENERATING MACHINE.

New York, February 5, 1915.

The Honorable Commissioner of Patents,
Washington, D.C.

S i r :

In reponse to Office Action of February 7th, 1914, please amend as follows:

On page 1 of the specification, line 5, after "waves" insert substantially corresponding to the original recorded sounds in intensity or amplitude as well as in pitch and timbre; lines 11 and 12, cancel "self-sustaining" and substitute - such regenerated. Lines 15 and 16 cancel "self-sustaining" and substitute - such -. In line 19 strike out the amendment inserted after the word "waves", and which reads " of small volume and high tension". In line 20 cancel "high tension" and substitute - relatively violent -. In line 25, after "conducting" insert - such - and after "disturbances" strike out "of such tension". In the last line strike out "tension" and substitute - violence of the disturbances -.

On page 2, in line 1, change "tension" to - movement -. Cancel the last two lines of page 2, and the first two lines of page 3, and substitute - directly in the free air surrounding it sound waves of an intensity or amplitude substantially corresponding to the original recorded sound waves. In other words, the original sounds

are directly regenerated by the vibrating tympanum without the interposition of a restrictive or sound modifying transformer.

On page 6, in the last line, after "portion" insert - or supporting rim - .

On page 7, in line 7, strike out "called for by the correla", and strike out lines 8, 9 and 10, and line 11 through the period, and substitute - which are required to regenerate the sound waves in the manner above described.

On page 8 in the last line, change the comma before "but" to a period, and strike out the remainder of the line, and the first five lines and line 6, through the period, on page 9.

On page 9, in line 10, strike out "It is prob-" and strike out lines 16 to 28 inclusive, constituting the remainder of the paragraph.

Cancel claims 1 to 4, inclusive, and substitute therefor the following:

1. In a machine for directly regenerating sound from a record of the same, a vibratile conical tympanum, and a mechanical transmission through which the vibrations produced by the record are transmitted to the tympanum, the tympanum being of sufficient area to impart to the surrounding free air, when the tympanum is so vibrated, sound waves substantially corresponding in intensity to the recorded sound waves; substantially as described.

2. In a machine for directly regenerating sound from a record of the same, a vibratile conical tympanum, a mechanical transmission through which the vibrations produced by the record are transmitted to the tympanum, the tympanum being of sufficient area to impart to the surrounding free air, when the tympanum is so vibrated,

sound waves substantially corresponding in intensity to the recorded sound waves, and an open-work cabinet enclosing the tympanum but affording substantially free access of the surrounding air thereto; substantially as described.

Change the number of claims 5, 6, 7, 8, 9 and 10 to 3, 4, 5, 6, 7 and 8, respectively. Cancel claim 11 and change the numbers of claims 12 and 13 to 9 and 10.

In claim 8, old claim 10, in line 5, after "arm" insert - having a free end -.

Cancel claims 14 to 19, inclusive, and substitute therefor the following :

7. ~~11.~~ In a machine for directly regenerating sound from a record of the same, a tympanum support having a circular aperture, a light vibratile tympanum having its outer edge rigidly mounted in said support, said tympanum being shaped to provide an annular sustaining rim adjacent said support, and a conical portion springing from the inner edge of said annular rim, a cap of non-vibratile material rigidly secured to the apex of said conical portion of said tympanum, and a mechanical transmission through which the vibrations produced by the record are transmitted to the tympanum, the tympanum being of sufficient area to impart to the surrounding free air, when the tympanum is so vibrated, sound waves substantially corresponding in intensity to the recorded sound waves; substantially as described.

8. ~~12.~~ In a machine for directly regenerating sound from a record of the same, a ponderous tympanum support having a circular aperture, a light tympanum mounted upon said support in said aperture, said tympanum having a central conical portion, the base of which exceeds in area one half the effective area of the said tympanum.

and a mechanical transmission, through which the vibrations produced by the record are transmitted to the tympanum, the tympanum being of sufficient area to impart to the surrounding free air, when the tympanum is so vibrated, sound waves substantially corresponding in intensity to the recorded sound waves; substantially as described.

9. ~~12.~~ In a machine for directly regenerating sound from a record of the same, a ponderous tympanum support having a circular aperture, a light vibratile tympanum exceeding nine inches in diameter, having its outer edge rigidly mounted on said support, said tympanum being shaped to provide an annular rim adjacent said support, and a conical portion springing from the inner edge of said annular rim, a cap of non-vibratile material rigidly secured to the apex of said conical portion of said tympanum, and a mechanical transmission through which the vibrations produced by the record are transmitted to the tympanum, whereby the tympanum imparts to the surrounding free air sound waves substantially corresponding in intensity to the recorded sound waves; substantially as described.

10. ~~14.~~ In a machine for directly regenerating sound from a record of the same, a ponderous tympanum support having a circular aperture exceeding nine inches in diameter, a light vibratile tympanum mounted in said aperture and having its outer edge rigidly secured upon said support, said tympanum being shaped to provide an annular rim adjacent said support, and a conical portion springing from the inner edge of said annular rim, the diameter of the base of said conical portion being not less than eight-tenths of the diameter of the said circular aperture in said support, a cap of non-vibratile material rigidly secured to the apex of said conical portion of said tympanum, and a mechanical transmission through which the vibrations

produced by the record are transmitted to the tympanum, the tympanum being of sufficient area to impart to the surrounding free air, when the tympanum is so vibrated, sound waves substantially corresponding in intensity to the recorded sound waves; substantially as described.

11. ~~18.~~ In a machine for directly regenerating sound from a record of the same, a ponderous tympanum support having a circular aperture, a light vibratile tympanum mounted in said aperture, and having its outer edge secured to said support, said tympanum being shaped to provide ~~an annular rim adjacent said support, and a conical por-~~ tion springing from the inner edge of said annular rim, the altitude of said conical portion being substantially one fourth of the diameter of its base, a cap of non-vibratile material rigidly secured to the apex of said conical portion of said tympanum, and a mechanical transmission through which the vibrations produced by the record are transmitted to the tympanum, the tympanum being of sufficient area to impart to the surrounding free air, when the tympanum is so vibrated, sound waves substantially corresponding in intensity to the recorded sound waves; substantially as described.

12. ~~16.~~ In a machine for directly regenerating sound from a record of the same, a ponderous tympanum support having a circular aperture exceeding nine inches in diameter, a light vibratile tympanum mounted in said aperture, and having its outer edge secured to said support, said tympanum being shaped to provide an annular rim adjacent said support, and a conical portion springing from the inner edge of said annular rim, the diameter of the base of said conical portion being not less than eight-tenths

of the diameter of said circular aperture in said support, and the altitude of said conical portion being substantially one quarter of the diameter of its base, a cap of non-vibratile material rigidly secured to the apex of said conical portion of said tympanum, and a mechanical transmission through which the vibrations produced by the record are transmitted to the tympanum, whereby the tympanum imparts to the surrounding free air sound waves substantially corresponding in intensity to the recorded sound waves; substantially as described.

Change the numbers of allowed claims 20, 21, 22, 23, 24 and 25 to 17, 18, 19, 20, 21 and 22 respectively.

Cancel claims 26 and 27. Change the number of claim 28 to 23, and in line 5 change "angle" to - angled -.

Change the numbers of allowed claims 29, 30, 31, 32 and 33 to 24, 25, 26, 27 and 28.

Cancel claims 34, 35, 36, 37 and 38. Change the numbers of claims 39, 40 and 41 to 29, 30 and 31. Cancel claims 42, 43, 44 and 45. Change the number of allowed claim 46 to 32. Cancel claims 47 to 53 inclusive. Change the number of allowed claim 54 to 33.

Cancel claims 55 to 62 inclusive. Change the number of allowed claim 63 to 34. Cancel the remaining claims and substitute:

28. ~~31~~ ~~35.~~ In a sound regenerating machine, a tensioned vibration transmission, a style-holder upon one end of said transmission and an untensioned tympanum connected with the opposite end of said transmission, the tension of the transmission being in the direction of its vibration; substantially as described.

REMARKS

The specification has been amended, and many of the claims have been cancelled, without prejudice, to reduce the number of claims, in deference to the Examiner's suggestion. Other claims have been redrawn to express more clearly the essential novelty of applicant's invention.

New claims 1 and 2 will, perhaps, bear upon their faces the distinguishments relied upon, but they will hereinafter be discussed in connection with the redrawn claims numbered 11 to 16.

Reconsideration of claims now numbered 3 to 8, inclusive, is respectfully requested.

Claim 3 is rejected on Shanks and Amet, No. 562, 753 and No. 562,694; Rep No. 1,002,655, and Lumiere, in view of Skiff, Shields and Weeton. We do not find in any one of these patents a cabinet having two compartments, one of which contains a record tablet and the other a tympanum with a transmission arm extending from one compartment to the other. We are at a loss to understand why the Examiner says there is no invention in this arrangement. As pointed out, the cabinet, having a partition between the record tablet and the tympanum, effects a variety of functions, which are enumerated in the argument filed December 24, 1913. In the absence of such a construction in the prior art, we respectfully submit that the claims should be allowed.

Claim 4 contains the limitation that the transmission arm swings on one side of the partition and the tympanum is mounted upon the transmission arm and swings upon the other side of the partition. We do not understand how the patent to Johnson has any bearing upon this claim. Where

is the partition upon which the transmission arm is supported and through which it extends? In the German patent the tympanum, which is in the small reproducer, is immediately above the record tablet, and we do not see any partition through which the transmission arm extends, or, indeed, any transmission arm at all.

With respect to claim 5, we do not see that Persichetti shows any partition at all, much less a transmission arm extending downwardly through such a partition and carrying a tympanum there beneath, and the same remark applies to Szek British patent.

With respect to claims 6 and 7, we ask for further application of the references or an allowance. We do not understand what relation the flaring of the mouth of the horn in Persichetti would have to these claims, which call for a particular cabinet structure and arrangement, including a transmission arm swinging over the record support and a tympanum carried by the arm and extending under the record support. So far as we can see the references cited against this group of claims have no relation to the invention herein disclosed. The differences are so great that there can be no objection to defining them but it seems to us that they are defined in the claims as now presented.

Claim 8 falls with the group just discussed, and the Examiner is asked to specifically apply the Johnson reference.

We respectfully solicit a careful consideration of the new claims 11 to 16 inclusive, which have been redrawn, following somewhat the form of new claims 1 and 2, to define a tympanum of such area as to produce directly regenerated sound waves substantially corresponding in intensity or amplitude to the recorded sound waves. That is

to say, a tympanum adapted to regenerate by its own move ments when vibrated by the record, the original sounds, without the interposition of any horn or other confining transformer. The Examiner will recognize, we believe, that such a tympanum has long been sought for by those most skilled in the art, and this is evidenced by the patents cited, such as Shanks, Amet and Lumiere. Those patented devices were certainly failures, and, so far as we are aware, no one before the present applicant succeeded in producing such a tympanum. That the applicant has fully succeeded we can prove to the Examiner by demonstration, if he so desires. It is suggested that size is not a patentable limitation, and that in any case Lumiere disclosed a diaphragm more than nine inches in diameter. The fact is that the problem which the applicant endeavored to solve does not exist until the tympanum is made of very large diameter, that is, of diameter large enough to regenerate the original sounds. When work is attempted on such a large diameter it is found that the diaphragm vibrates at different rates and different intensities in different parts, so that it is divided into nodes of great activity, alternating with portions of little or no activity. Lumiere encountered this difficulty and attempted to solve the problem by the structure disclosed in his patent No. 986,177. We believe it can easily be proved that that attempt was a failure. The Lumiere patent belongs to the Victor Talking Machine Company, but that Company has never put upon the market any machines embodying the invention. However that may be, the applicants claims are carefully distinguished from Lumiere, which is not cited directly as a reference against them. In our opinion the suggestion that there is no invention

in the form of regenerating tympanum devised by the applicant, is entirely refuted by the Lumiere patent. If the small reproducer diaphragms of conical shape were in themselves sufficient to show those skilled in the art that the difficulties encountered by Lumiere could be overcome by adopting the form of tympanum adopted by the applicant, then Lumiere would have adopted that form. The fact is that the applicant has succeeded where others, and those most skilled in the art, have failed, and under those circumstances deductions which might otherwise be drawn from the earlier different, but now suggestive, patented structures, are overcome by the historical fact. We do not believe that the Examiner is justified in rejecting the applicant's tympanum claims unless he can find in the prior art a structure which in itself corresponds to those claims.

With respect to old claims 29, 40 and 41, now numbered 29, 30 and 31, we ask the Examiner to take into consideration the foregoing remarks. We believe that it will now be apparent to the Examiner that the selection of the particular dimensions is of the essense of the invention and attains novel results arising from the particular dimensions and such as could not be obtained by the devices shown in the references. If the Examiner desires to hear the results, we can arrange to make a demonstration for him here in New York, paying his traveling expenses for that purpose, or perhaps we can arrange to have one of the machines taken to the Patent Office.

An early and favorable reconsideration is respectfully solicited.

Pennie Davis Edelsberg
Attorneys for Applicant.

Div. 23 Room 379

Address only
The Commissioner of Patents,
Washington, D. C.,
and not any official by name.

2-259

Paper No. 6

All communications respecting this application should give the serial number, date of filing, title of invention, and name of the applicant.

DEPARTMENT OF THE INTERIOR

UNITED STATES PATENT OFFICE

LCE-Su WASHINGTON Feb. 23, 1915.

U. S. PATENT OFFICE
FEB 23 1915
MAILED

Pennie, Davis and Goldsborough,
35 Nassau Street,
New York, N. Y.

Please find below a communication from the EXAMINER in charge of the application of
Marcus C. Hopkins, for Sound Regenerating Machine, filed July 14, 1913, Serial No. 778,826.

Thomas Ewing
Commissioner of Patents.

In response to amendment of Feb. 6, 1915.

Page 7, line 7, "which are" should be canceled as duplicated in the following amendment.

It is doubtful to the examiner if a structure as disclosed by applicant will by itself produce sound waves corresponding in intensity to the recorded sound waves, as such requires that the entire energy represented by the recorded waves be transmitted without loss of energy to the diaphragm and that the diaphragm offer substantially no resistance to the movement so transmitted. If applicant insists on claims embodying such a limitation, he should satisfy this office by competent affidavits or by demonstration that such is true.

Claim 1 is rejected on Lumiere, of record, in view of the conical diaphragms of record. As such conical diaphragms are designed to be transversely rigid and operate in producing sound analogously to a piston, there would seem to be no apparent limit within a moderate range on the diameter which could be employed. Therefore, to increase the diameter of any such diaphragm, as in the references cited to perform an old function where there is no apparent limit to the diameter that may be employed, is not seen to be a display of invention. In re Pein, 201 O. G., 570.

Claim 2 is rejected on the above references and reasons. No

invention is seen, further, in enclosing Lumiere, or a similar structure, in a cabinet, especially in view of Miller, of record, Fig. 6, or such structures as in

Eckhardt, 903,364, Nov. 10, 1908, (181-3), or
Zappert, English, 17,827, July 31, 1909, (181-3), 1 sheet.

Claim 3 is rejected on the references and for the reasons of record. It is not seen that applicant's partition effects any different function from the partition in any cabinet that separates the record and needle compartment from the sound emitting compartment, as in

English, 947,227, Jan. 25, 1910, (181-3),

or from the partitions in Shields or Welton, of record. Therefore, to mount any of the long arm transmission devices of record in a cabinet with such a separating wall is thought but a matter of wise selection and adaptation, and not of invention.

Claim 4 is rejected on the references and for the reasons of record. In Johnson, 12 is a tympanum and 4 a transmitting arm. There would seem to be no invention in mounting Johnson in a cabinet, as in the German structure cited. So, also, e in Welton is a tympanum.

Claim 5 is rejected on the references and for the reasons of record. In Persichetti, a, f, is clearly a partition, and if his transmitting arm h were provided with a diaphragm at the mouth, as in Szek, or with a diaphragm, as in Johnson or Welton, the structure would meet the terms of this claim.

Claims 6 and 7 are rejected on the references and reasons of record and above given. If the mouth of h were flared, as in Szek, it would underlie e. See Fig. 2. The claims fail to bring out applicant's invention, being so broad and indefinite as to be met in widely different structures not involving invention.

Claim 8 is rejected on Johnson, for the reasons of record.

Claims 9 and 10 are allowed.

Claims 11, 13, 14, 15 and 16 are rejected on the grounds of

rejection of claim 1. The interposition of the cap of non-vibratile material in Lumiere, or any other old type of diaphragm substituted in Lumiere, is not seen to involve invention, in view of the common use of such in the art, for the same purpose as it is employed by applicant.

Claim 12 is rejected on the grounds of rejection of claim 1.

Claims 17 to 28 inclusive are allowed.

Claims 29, 30 and 31 are rejected on Lumiere, in view of the conical diaphragms of record, for the reasons above given.

Claims 32 to 35 inclusive are allowed.

Claim 7, line 3, "support" should be -holder-.

L.H.S.

H. W. Grove

Div. 23 - Room 379

#7

FEB 23 1916 U.S. PATENT OFFICE

UNITED STATES PATENT OFFICE

Application of MARCUS C. HOPKINS,
Serial No. 778,826,
Filed July 14, 1913,
SOUND REGENERATING MACHINE.

New York, February 22, 1916.

The Honorable Commissioner of Patents,
Washington, D.C.

S i r :

In response to Office Action of February 23, 1915, please amend as follows:

In the specification, page 7 line 16, change "substantially" to -at least-, and in line 19 change "substantially" to -at least-.

Page 8, line 20, strike out "that" at the beginning of the line.

Page 7, line 7, cancel "which are".

In the second line of claim 1 and the second line of claim 2, after the word "same" insert -without an amplifying horn or chamber- and make the same insertion in the second line of claim 11, claim 12, claim 13, claim 14, claim 15 and claim 16.

In claim 7, change "support" to -holder- in line 3.

R E M A R K S

In the last Office Action the Examiner expressed doubt whether the structure disclosed by applicant will itself produce sound waves corresponding in intensity

to the recorded sound waves "as such requires that the entire energy represented by the recorded waves be transmitted without loss of energy to the diaphragm and that the diaphragm offers substantial non-resistance to the movement to be transmitted" and called for affidavits or a demonstration. A demonstration of the machine was made to the Principal Examiner and his assistant last week, and we believe they were satisfied that the machine would produce, without an amplifying horn or chamber, sound waves substantially corresponding in intensity to the original recorded sound waves. Of course, the Assistant Examiner who wrote the last Office Action was mistaken in supposing that there is any necessary relation between the energy represented by the recorded waves and the energy delivered to the air by the diaphragm. Only a minute part of the energy of the recorded waves is gathered in by the recording trumpet and made use of to actuate the recording device. The energy put upon the air by the vibrating diaphragm is not at all the same energy that existed in the recorded waves, but is the energy of the motor which drives the record tablet in the reproducing machine.

We have amended claims 1 and 2 and claims 11 to 16, inclusive, to emphasize the fact that the machine has no horn or amplifying chamber. We do not believe that the Examiner will suggest that this is a negative limitation, and its purpose is consistent with the purpose which we have continually followed, that is, to distinguish the present machine from the ordinary machine in which the regenerator comprises a reproducer and a trumpet. In the opening part of the specification, we tried to make it clear that in ordinary machines, the reproducer, or sound

box, is incapable of generating sound waves of such a character as will persist in the air to any substantial extent. The character of the sound made by an ordinary phonograph sound box disconnected from the amplifying horn or chamber, is well known to the Examiner, and is, of course, easily distinguished in his mind from the sound produced by the sound box acting together with the amplifying horn or chamber. It has been demonstrated to the Examiner that the applicant's machine, without any amplifying horn or chamber, will produce a volume of sound which corresponds to the sound produced by the conjoint action of the sound box and amplifying chamber in an ordinary phonograph. In other words, the applicant's machine does, with its large diaphragm, what the old machines do with the combined diaphragm and amplifying horn or chamber, and in so doing the applicant's machine overcomes the limitations which necessarily reside in the use of a horn or chamber. This accomplishment is a perfectly definite thing which anyone can understand, which has often been tried before, and which is done by the applicant for the first time. We have done everything we possibly could do to define this distinction in the claims, and it seems to us that they do define it. The additional words inserted in the claims have not been inserted with the intent or purpose of changing their scope, nor is it intended that they shall in any way result in prolonging the prosecution of the case. They are merely an earnest of our purpose to distinguish definitely from the old machines in which an amplifying horn or chamber is used.

We hardly know what we can say in regard to that paragraph of the Examiner's letter which suggests that the applicant's accomplishment does not involve invention.

As we understand it, the argument is that Lumiere proposed to use a large diaphragm, but not a conical diaphragm; that small conical diaphragms are old in sound boxes, and that consequently there is no invention in using a large conical diapgragm. It seems to us that this proposition need only be stated to refute itself. The fact is that, although small conical diaphragms were old in sound boxes, Lumiere, who is one of the most skilled men in the art, not only did not know that a large conical diaphragm would accomplish his purpose, but was unable to accomplish that purpose at all. The Lumiere patent is owned by the Victor Talking Machine Company and it is well known to those skilled in the art that the suggestions of Lumiere were abortive and never resulted in an operative machine. The applicant's claims clearly differentiate from the Lumiere patent and that is all that is necessary. On the question of invention the Lumiere patent is pertinent to the present discussion only because it shows that prior to the applicant, the art did not know how to accomplish the applicant's result

This ground of rejection was applied by the Assistant Examiner to claims 1, 2, 11 to 16 inclusive and 29, 30 and 31, and we do not believe that the present Examiner will insist upon it with respect to any one of those claims.

With respect to claim 2, the suggestion is that there is no invention in enclosing Lumiere by a cabinet of the character specified in claim 2, in view of Miller, Eckhardt or Zappert. In the first place, claim 2 distinguishes from Lumiere so enclosed, and in the second place the other references do not show a phonograph in which the sound producing means could be enclosed in an open-work

cabinet affording substantial free access of the surrounding air thereto. These other references show horn machines, the very essence of which is that they should be open only on one side. Claim 2 defines an arrangement in which a direct reproducer is surrounded by an open-work cabinet so that the sound may be given off in every direction. There is nothing of the sort in the prior art.

With respect to claims 3 to 8, inclusive, the grounds of rejection are not well understood. Many patents have been cited against these claims and the Examiner has applied them in different ways in successive actions. It will, perhaps, be best to discuss each of the claims separately, referring to all of the references cited against them.

Claim 3, which was originally claim 5, was, in the first Office Action, rejected on Shanks, two Emet patents, Repp or Lumiere, mounted in any conventional cabinet as Skiff, "no invention being found in separating the record and diaphragm spaces by a partition", especially in view of Shields or Welton. As we understand it, the Shanks, Emet, Repp and Lumiere patents were cited to show devices in which the sound was reproduced without the use of an amplifier, by a sounding device connected to the needle holder by a transmission arm. It is not suggested that any one of these patents disclosed the combination of claim 3, wherein the record table is located in one compartment, and the sounding device in another, the transmission arm extending through the partition. In Skiff, the record table and the regenerator, comprising a sound box and an amplifying horn, are enclosed in a single

compartment, which is precisely what the applicant does not do. His idea is to have the record table in one compartment which may easily be opened to remove and replace the record, to have the sounding device in another compartment which is permanently closed, and to so arrange the transmitting arm that it can swing over the record and yet extend through the partition from the record table to the sounding device. In Shields the record holder and sound box are enclosed in the same compartment. There is no transmission arm proper, unless it be considered that the stylus 14 is a transmission arm, in which case it results that the record holder, the transmission arm and the sound box, are all in the same casing. There is no amplifier, because the phonograph illustrated is one of that type which was provided with a branched tube, the terminals of which were to be placed in the ears of the listener. In Welton the record table, transmission arm and sound box are in one compartment, through the wall of which the tone arm extends, an amplifying horn being attached to the tone arm outside of the casing. There is here no cabinet with two compartments, and we are unable to imagine in what respect the Examiner supposed that it has any bearing on claim 3.

In the second Office Action this claim was rejected on the references of record without any application of those references. In the last Office Action the claim was rejected on the references of record, together with the patent to English No. 947,227, which shows the ordinary Victrola type of machine with encased horn. It is true that in this machine, as in all machines of the Victrola

type, there are two compartments, one containing the record disk, the transmission arm and the sound box, together with the tone arm, and the other containing the amplifying chamber. It seems to us that claim 3 definitely distinguishes from such an arrangement, in that it specifies a transmission arm extending from one compartment to another with a tympanum located in one compartment and connected with the transmission arm. It would be a great mistake for the Examiner to assume that it was an easy thing to devise and construct a transmission arm capable of carrying the vibrations from the record groove to the outer edge of the record and through a partition to the tympanum. Thst was a very difficult thing to do, and in our judgment warrants the allowance of claim 3.

Claim 4 was originally claim 6, and was allowed in the first Office Action. In the second Office Action it was rejected on Johnson No. 1,015,321, together with Shields or Welton or the German patent No. 220,412. The Johnson patent shows merely a usual type of tone arm and the mechanism of the phonograph, excepting the motor, is entirely unenclosed The Shield and Welton patents have already been considered. The German patent is practically the same as Welton, excepting that the record table is covered by movable cover d. We do not understand how this is to be applied to the claim. In the last Office Action the Examiner says, referring to the Johnson patent, that "12 is a tynpanum and 4 a transmitting arm." That is certainly putting an extraordinary construction upon the language of claim 4, but let us apply that interpretation. If 4 is the transmission arm, then what is the partition upon which it is supported and through which it extends, and how can the tympanum 4 swing?

The Examiner apparently recognized that the Johnson reference is lacking in the cabinet structure claimed, and says that there would be no invention in mounting Johnson in the cabinet of the German patent. We do not understand how this mounting is to be made so that the claim will read upon it, but even if that can be done, it would be to reject the claim on references which lack the very thing claimed. The Examiner also suggests that in Welton e is the tympanum, but in this case he is no better off than in the Johnson patent. There is no partition upon which the transmission arm is mounted and through which it extends.

Claim 5, which was originally claim 7, was allowed in the first Office Action. In the second Office Action it was rejected on the combination of the French patent No. 397,609 and the British patent No. 8011 of 1906. In the French patent the tympanum is the ordinary sound box diaphragm and there is a horn which extends downwardly through a bracket arm f which cannot by any stretch of the imagination be considered a partition. Even if it were a partition, the claim would not be met. It is not pretended that the British patent meets the claim, and by combining the two the Examiner has added the very thing which characterizes the claim. Furthermore, the combination suggested by the Examiner would still not have any transmission arm extending through a partition.

Claim 6 originally claim 8, was allowed in the first Action and rejected in the second on the same references as claim 5, originally claim 7, and the same remarks apply to this claim. We may point out that it is one thing to bend a horn or tone arm, and another thing

to produce a transmission arm which will change the direction of the vibrations, as is necessary in claims 5 and 6. Really, the only difference between the action on claim 5 and the action on claim 6, is that claim 6 includes the further limitation that the tympanum is beneath the support and since this is not found in either of the references, the Examiner proposes to modify them so as to include it. Why should he not, having already injected into the references the characteristic element of the claim, which they did not disclose? Claim 7, originally claim 9, is rejected on the same references, and nothing need be said about it. Claim 8, originally claim 11, was rejected in the first action on Shelbe No. 957,004, and has been amended. In the second Office Action, as claim 10, it was rejected on Johnson, and in the last Office Action this rejection was repeated. To sustain this rejection the Examiner says "4 and 7 are the two arms", whereas the fact is that 4 and 7 are one arm; but even considering them as two arms, the tympanum is not carried by the arm 7.

It seems to us that the real explanation of the somewhat extraordinary application of references just discussed is found in the last Office Action, where the Examiner says:

> The claims fail to bring out applicant's invention, being so broad and indefinite as to be met in wisely different structures not involving invention".

We have carefully considered this suggestion, and it seems to us that the claims are not open to that criticism. If they are, we would be glad to amend them, but after re-

If the Examiner thinks otherwise, we would be glad t know it and have him say specifically wherein the claims are indefinite.

Although we understand that the Assistant Examiner who will act upon the case in response to this amendment is not the Assistant Examiner who has heretofore acted upon the case, yet we would like, if possible, to get a final action at this time.

Respectfully submitted,

Pennie Davis & Goldsborough

Attorneys for Applicant.

Div. 23 Room 379 — 2-2 — Paper No. 8

Address only "The Commissioner of Patents Washington, D. C." and not any official by name.

All communications respecting this application should give the serial number, date of filing, title of invention, and name of the applicant.

DEPARTMENT OF THE INTERIOR

UNITED STATES PATENT OFFICE

F_E WASHINGTON March 4, 1916.

Pennie, Davis and Goldsborough,
35 Nassau Street,
New York, N. Y.

U. S. PATENT OFF. E.
MAR 4 1916
MAILED

Please find below a communication from the EXAMINER in charge of the application of

Marcus C. Hopkins, for Sound Regenerating Machine, filed July 14, 1913, Serial No. 778,826.

Thomas Ewing
Commissioner of Patents.

In response to amendment of Feb. 23, 1916.

Claims 1, 3, 11 to 16 and 29 to 31 are rejected as indefinite. The specification of the size according to results is believed to be too indefinite. The examiner understands that the base diameter and the altitude must have a definite relative proportion, and that the base diameter must be substantially nine inches in order that satisfactory results can be obtained. To merely specify this size by the result is believed to be too indefinite. The basis of reference which is stated to be the recorded sound waves is believed to be an indefinite reference base, and that such a range would be too great and variable to be readily determined. For instance, a limitation such as from eight to ten inches for the base diameter might be given. The statement in some of the claims that the diameter exceeds nine inches is not believed to be sufficiently definite. If it is immaterial what the size is within a considerable range, then it is a mere question of expediency, or selection of any size one desires for any loudness, and would not involve invention.

Claims 3 to 6 are rejected on the references and reasons of record. It is not believed to require invention to

479

put a partition anywhere one desires. If there is any invention, it is in the adaptation of the partition to the particular device. In other words, the construction by which the partition can be used is what involves the invention, if any, and not merely the idea of using a partition, as the claims now state. Attention is called to the decision in Thatcher Heating Co. vs. Burtis et al., C. D. 1887, 320, (or 39 O. G., 587), in which the U. S. Supreme Court held that there was no invention in the combination involved, no matter how or by what means it was effected; that the invention was in the means employed in making the adaptation.

The case appears otherwise allowable, as now advised.

J.

H. D. Crowbrock, Exr.

DIV. 23

#9

Room 379.

MAR 28 1916 U.S. PATENT

UNITED STATES PATENT OFFICE.

------oOo------

Marcus C. Hopkins,
Filed July 14, 1913,
Serial No. 778,826.

SOUND REGENERATING MACHINES.

------oOo------

Hon. Commissioner of Patents,

Sir:--

In response to the Official action of March 4,1916, please amend as follows:--

Page 6, last line, after "gripped between" insert - and rigidly supported -.

Claims 1 and 2, line 3, after "panum" insert - of large area rigidly supported at its periphery and freely exposed to unconfined air -.

Claims 11 and 12, line 3, after "tympanum" insert - of large area -.

Claim 11, line 4, before "mounted" insert - rigidly -.

Claim 12, line 4, before "mounted" insert - having its outer edge rigidly -.

Claim 13, line 5, before "mounted" insert - rigidly -.

Claim 14, line 3, after "aperture" insert - exceeding nine inches in diameter -. Line 4, before "secured" insert - rigidly -.

Claim 15, line 3, after "tympanum" insert - of large area -. Line 4, before "secured" insert - rigidly -. Line 6, after "support," insert - the inner diameter of said rim exceeding nine inches, -.

Claim 16, line 5, before "secured" insert - rigid-

Claims 29, 30 and 31, line 1, after "tympanum" insert - rigidly supported at its periphery -.

The foregoing amendments are made as the result of an oral interview recently had with the Examiner, at which it was agreed that the said amendments would not only more clearly define the invention, but would also render the material distinctions between the same and the prior art, including a number of patents which show horns or amplifiers of paper or other similar material directly associated with the reproducer needle, clearly apparent. It is essential to the success of applicant's machine that the tympanum be of large area and that the base of the vibratile portion thereof exceed nine inches in diameter, and furthermore that the peripheral edge of the tympanum, exterior of the vibratile portion, be rigidly secured or tightly gripped between the rings of the supporting frame. These definitions of the essential characteristics of the invention have been included in the claims by the amendments aforesaid, and said claims are, therefore, believed to be allowable.

The Examiner's objection that applicant indicates only the lower limit of the diameter of the tympanum and does not include both limits, is believed to be without substantial foundation. Applicant has demonstrated that his invention is not wholly satisfactory when the conical tympanum is made with a basal diameter of less than nine inches. He has also found that tympanums of much larger diameter are eminently successful, but he is not prepared to even indicate any maximum limit in respect of such diameter, nor should a statement of such an upper limit be required. He has produced a highly successful device which is novel and useful, and as the prior art discloses no similar device either structurally or operatively

considered, it is submitted that he has properly defined his invention in the claims, when he has distinguished the device, as so defined in the claims, from the prior art.

For example, in claims 1 and 2, it is stated that the vibratile conical tympanum is of large area rigidly supported at its periphery and freely exposed to unconfined air, so that when the tympanum is vibrated, it imparts to the surrounding free air, sound waves corresponding in intensity to the recorded sound waves. At a recent demonstration before the Examiner and his assistants, at the offices of applicant's attorneys in this city, it was made clearly manifest that the machine embodying the present invention did reproduce sounds or sound waves substantially corresponding in intensity to the recorded sound waves. The demonstrating machine was without any amplifying devices whatever in the form of a horn or sound-box, and the Examiner will recall that the sounds reproduced were clear, resonant, self-sustained and of admirable quality and timbre, and of an intensity which obviously approximated that of the recorded sound waves. It is, therefore, believed that the expression "substantially corresponding in intensity with the recorded sound waves" is correct and perspicuous and can give rise to no uncertainty or ambiguity. Of course, the term substantially implies a certain latitude, which the facts in the case would appear to justify, as all of the reproductions of recorded sounds by applicant's machine clearly indicate to the ordinary ear that they necessarily approximate the recorded sounds not only in intensity, but in timbre and quality.

In the other claims, as amended, the characteristic feature of mounting or supporting the outer edge of the vibratile tympanum rigidly on a support is brought out, and in some of

amendments go to structure and differentiate such structure from the prior art, it is urged that the claims are no longer open to the objection of indefiniteness.

In respect of the prior art patents, not of record, but to which attention has been called, and which show horns or other amplifying devices made of paper or the like and directly associated with the needle or stylus, attention is called to the fact that these devices do not differ in character from the ordinary amplifying horn or sound-box, and are not per se vibratile tumpanae, but mere amplifiers or condensers of sound waves. Furthermore, none of these prior art devices show any equivalent of a tympanum having its outer edge rigidly mounted in a support. In short, the horn-like reproducers are nothing more than the ordinary horn or amplifying megaphone having the stylus directly attached to its wall, so that the stylus sets up a localized vibration, which is confined within the flaring body of the horn and amplified and reproduced as sound waves, not by any vibration of the horn as a whole, but merely by the condensation and amplification of the vibrations of the stylus and the portion of the material of the horn immediately adjacent the stylus connection.

It is respectfully submitted that as amended, the claims clearly define the essential novelty of applicant's invention and should be allowed.

Respectfully submitted,

MARCUS C. HOPKINS,

by Lemuel Davis & Goldsborough

Attorneys.

The Commissioner of Patents,
"Washington, D. C.,"
and not any official by name.

Reference should be made to serial number, date of filing, title of invention, and name of the applicant.

478

DEPARTMENT OF THE INTERIOR
UNITED STATES PATENT OFFICE
WASHINGTON

F_E

pr. 1, 1916.

U. S. PATENT OFFICE.
APR 1 1916
MAILED

Pennie, Davis and Goldsborough,
35 Nassau Street,
New York, N. Y.

Please find below a communication from the **EXAMINER** *in charge of the application of*

Marcus C. Hopkins, for Sound Regenerating Machine, filed July 14, 1913, Serial No. 778,825.

Thomas Ewing
Commissioner of Patents.

c 6—9931

In response to amendment of March 28, 1916.

No reply was made to the rejection of claims 3 to 6, made in the last office action. It is thought that this was an oversight by applicant.

The amendment above mentioned must therefore be held to be an incomplete response to the last office action.

W. D. Grossbeck, Exr.

Room 379.

11

E

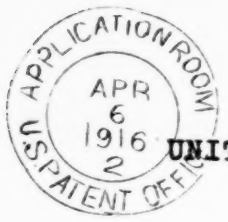

UNITED STATES PATENT OFFICE.

----:0:----

M.C. Hopkins,
Filed July 14, 1913,
Serial No. 778,826..

: SOUND REGENERATING MACHINE.

--------:0:0:--------

Hon. Commissioner of Patents,

Sir:--

In the matter of the above entitled application, please cancel claims 3 to 6 inclusive and re-arrange the numerals of the other claims accordingly.

--

It was intended to cancel these claims by the last amendment, but through an inadvertence the matter was overlooked. The case is now believed to be in condition for allowance, and it is respectfully requested that it be passed to issue.

Respectfully submitted,

M.C. HOPKINS.

By Lewis & Davis & Goldsborough
Attorneys.

ADDRESS ONLY
THE COMMISSIONER OF PATENTS,
WASHINGTON, D. C.

2—181

Serial No.
778,826

BU.

DEPARTMENT OF THE INTERIOR

UNITED STATES PATENT OFFICE

WASHINGTON April. 11th. 1916.

Marcus C. Hopkins. Assor.

Sir: Your APPLICATION for a patent for an IMPROVEMENT in Sound Regenerating Machine.

filed July 14th. 1913. , has been examined and ALLOWED.

The final fee, TWENTY DOLLARS, must be paid not later than SIX MONTHS from the date of this present notice of allowance. If the final fee be not paid within that period, the patent on this application will be withheld, unless renewed with an additional fee of $15, under the provisions of Section 4897, Revised Statutes.

The office delivers patents upon the day of their date, and on which their term begins to run. The printing, photolithographing, and engrossing of the several patent parts, preparatory to final signing and sealing, will require about four weeks, and such work will not be undertaken until after payment of the necessary fee.

When you send the final fee you will also send, DISTINCTLY AND PLAINLY WRITTEN, the name of the INVENTOR, TITLE OF INVENTION, AND SERIAL NUMBER AS ABOVE GIVEN, DATE OF ALLOWANCE (which is the date of this circular), DATE OF FILING, and, if assigned, the NAMES OF THE ASSIGNEES.

If you desire to have the patent issue to ASSIGNEES, an assignment containing a REQUEST to that effect, together with the FEE for recording the same, must be filed in this office on or before the date of payment of final fee.

After issue of the patent uncertified copies of the drawings and specifications may be purchased at the price of FIVE CENTS EACH. The money should accompany the order. Postage stamps will not be received.

Final fees will NOT be received from other than the applicant, his assignee or attorney, or a party in interest as shown by the records of the Patent Office.

Respectfully,

Thomas Ewing
Commissioner of Patents.

Pennie, Davis & Goldsborough.
35 Nassau St.
New York, N. Y.

6—1841

IN REMITTING THE FINAL FEE GIVE THE SERIAL NUMBER AT THE HEAD OF THIS NOTICE.

UNCERTIFIED CHECKS WILL NOT BE ACCEPTED.

2038

23 #12

LS REC'D MAR 22 1918 C.C.U.S. PAT. OFFICE

PETITION

Honorable Commissioner of Patents,

Washington, D. C.

Sir:

Your petitioner, MARCUS C. HOPKINS, a citizen of the United States, residing in the Borough of Manhattan, City, County and State of New York, whose post office address is No. 35 Nassau Street, New York City, N. Y., represents that on July 14, 1913, he filed an application for Letters Patent for an Improvement in SOUND REGENERATING MACHINES, Serial Number 778,826, which application was allowed April 11, 1916, but that he failed to make payment of the final fee within the time allowed by law. He now makes renewed application for Letters Patent for said invention, and prays that the original specification, oath and drawings, may be used as a part of this application.

SIGNED at New York City, New York, on this 21st day of March, 1918.

MARCUS C. HOPKINS,

By Pennie, Davis and Goldsborough
His Attorneys.

182

2036

MAIL ROOM MAR 29 1918 U.S. PATENT OFFICE

#13

Div. 25 Room 379

DRW 23

UNITED STATES PATENT OFFICE

Application of MARCUS C. HOPKINS,

Renewal Serial Number 224,048,

Filed March 22, 1918,

SOUND REGENERATING MACHINE.

New York, March 28, 1918.

Honorable Commissioner of Patents,

Washington, D. C.

Sir:

Prior to the examination on the merits of the above case, please enter the following amendments as hereby directed:

Page 6, erase from "The", line 13, through "which", line 14, and substitute: -Two of the three arms of the said spider-; same page, line 24, correct the spelling of "underly" to underlie; change the last line as amended to read: - which peripheral portion or supporting rim 1 is tightly gripped and rigidly supported between the -.

Page 8, line 20, erase "that".

Page 14, between lines 5 and 6, insert the following:

-It will be noted that the distance between the point of the style g' and the axis of the lever Q is greater than the length of the arm U which projects from the center of the lever R and to which the rod V is connected. By reason of this fact, and of the fact that the levers Q and R, and the rod links S, S' form a parallelogram, the length of vibration of the tympanum is relatively much less than that of the style, and the tympanum thus offers little resistance to the movement of the style.

thereby greatly reducing the wear on the record. To compensate for this small movement of the tympanum, its large area enables it to move a large body of air, so as to obtain sound waves of large volume and great carrying power.

In line 2 of each of claims 5 and 6, insert a comma after "members".

Cancel claims 25, 26 and 27.

Add the following claims:

29. In a sound-regenerating machine, a vibratile conical tympanum of large area rigidly supported at its periphery and freely exposed to unconfined air, a sound-vibrated element, and vibration transmission means connecting said element and said tympanum and arranged to impart to the tympanum vibrations which are relatively much shorter than the vibrations imparted to the said element.

30. In a sound-regenerating machine, a vibratile conical tympanum rigidly supported at its periphery and freely exposed to unconfined air, a sound-vibrated element, and vibration transmission means connecting said element and said tympanum arranged to impart to the tympanum vibrations which are relatively much shorter than the vibrations imparted to the said element; the tympanum having an area sufficiently large to effect, without amplification, sound waves of large volume and carrying power.

31. In a sound-regenerating machine, a vibratile conical tympanum of large area, rigidly supported at its periphery and freely exposed to unconfined air, a sound-vibrated element, and tensioned transmission means connecting said element and said tympanum and arranged to impart to

the tympanum vibrations which are relatively much shorter than the vibrations imparted to the record end of the style.

Sigp.

REMARKS

It is desired to acknowledge the courtesy of the several extended interviews recently accorded in the matter of the above case. The added claims are based on claims standing allowed in the case and are assumed for that reason to be allowable. A short explanation has been incorporated in the specification as regards the relative length of the vibrations of the tympanum and the style or the sound vibrated element.

Claims 25, 26 and 27 have been canceled, as those claims will be incorporated, together with others, in a divisional application directed to the tympanum or diaphragm per se.

Respectfully submitted,

Pennie, Davis & Goldstough

Attorneys for Hopkins.

418

Div. 23 Room 217

Paper No. 14

DEPARTMENT OF THE INTERIOR

UNITED STATES PATENT OFFICE

WASHINGTON April 5, 1918

WEB

PATENT OFFICE
APR 5 1918
MAILED

Rennie, Davis & Goldsborough,
35 Nassau St.,
New York

Please find below a communication from the EXAMINER in charge of the application of
Marcus C. Hopkins, Serial No. 224,048, filed March 22, 1918,
Sound Regenerating Machine.

James T. Newton
Commissioner of Patents

Responsive to amendment filed March 22, 1918.

Before this case can be passed to issue it will be necessary for applicant to certify over his own signature that his address as given in the renewal petition is correct, as it does not correspond with the address given in his original petition.

When properly certified the case may then be allowed.

W. D. Crowell,
Examiner

U.S. PATENT OFFICE APPLICATION DIV APR 18 1918

#15
Letter attached

IN THE UNITED STATES PATENT OFFICE

DIV 23

In re application of
Marcus C. Hopkins,
Sound Regenerating Machine,
Filed March 22, 1918,
Serial No. 224,048.

BEFORE THE EXAMINER
Room 217, Div. 23.

HON. COMMISSIONER OF PATENTS,
Washington, D. C.

Sir:

In response to the Official action of April 5, 1918, entry of the following amendments is hereby directed:

In line 2, of each of present claims 1, 2, 7, 8, 9, 10, 11, 12, erase "without an amplifying horn or chamber "

The matter to be erased is incorporated as an amendment in the communication filed February 23, 1916. Upon consideration, it appears that said matter is unnecessary to the claims from which it is erased.

Enter the attached signed statement as to applicant's post office address.

Allowance of the case is asked.

Respectfully submitted,

MARCUS C. HOPKINS,

By Pennie, Davis & Goldsborough
Attorneys.

Washington, D. C.
April 18, 1918.

420

22
2038

Div. 23 Room 379

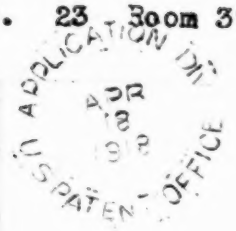

UNITED STATES PATENT OFFICE

Application of MARCUS C. HOPKINS,
Renewal Serial Number 224,048,
Filed March 22, 1918,
SOUND REGENERATING MACHINES.

New York, N.Y., April 6, 1918.

Honorable Commissioner of Patents,
Washington, D. C.

Sir:

I hereby certify that my address as given in the renewal petition in the above entitled application is correct; that I now reside in the Borough of Manhattan, City, County and State of New York, and that my post office address is No. 35 Nassau Street, New York City.

Respectfully,

Marcus C. Hopkins

12-3
2036

#16
G

Room 217 Div. 23.

APPLICATION
APR 20 1918
PATENT OFFICE

Div. 11824

IN THE UNITED STATES PATENT OFFICE.

Application of MARCUS C. HOPKINS

Filed March 22, 1918

Serial No. 224,048

SOUND REGENERATING MACHINE

New York, N. Y., April 19, 1918

Honorable Commissioner of Patents

Washington, D. C.

S i r:

Claim 11, change line 6, as amended, to read,

G1 "an annular rim adjacent said support, the outer diameter of said rim exceeding nine inches, and a conical por."

R E M A R K S.

Claim 11 has been amended to correct an inaccuracy which renders it inconsistent with, e.g., Claim 12. The circular aperture in the support exceeds nine inches in diameter.

Respectfully submitted,

Pennie, Davis & Goldsborough

Attorneys for Hopkins.

422

ADDRESS ONLY
THE COMMISSIONER OF PATENTS,
WASHINGTON, D. C.

AE 2—181 · **Serial No.** 778,826

DEPARTMENT OF THE INTERIOR 224,048

UNITED STATES PATENT OFFICE

WASHINGTON May 1, 1918.

Marcus C. Hopkins, Assor.,

Sir: Your APPLICATION for a patent for an IMPROVEMENT in Sound Regenerating Machine, filed Mar. 22, 1918, has been examined and ALLOWED.

The final fee, TWENTY DOLLARS, must be paid not later than SIX MONTHS from the date of this present notice of allowance. If the final fee be not paid within that period, the patent on this application will be withheld, unless renewed with an additional fee of $15, under the provisions of Section 4897, Revised Statutes.

The office delivers patents upon the day of their date, and on which their term begins to run. The printing, photolithographing, and engrossing of the several patent parts, preparatory to final signing and sealing, will require about four weeks, and such work will not be undertaken until after payment of the necessary fee.

When you send the final fee you will also send, DISTINCTLY AND PLAINLY WRITTEN, the name of the INVENTOR, TITLE OF INVENTION, AND SERIAL NUMBER AS ABOVE GIVEN, DATE OF ALLOWANCE (which is the date of this circular), DATE OF FILING, and, if assigned, the NAMES OF THE ASSIGNEES.

If you desire to have the patent issue to ASSIGNEES, an assignment containing a REQUEST to that effect, together with the FEE for recording the same, must be filed in this office on or before the date of payment of final fee.

After issue of the patent uncertified copies of the drawings and specifications may be purchased at the price of FIVE CENTS EACH. The money should accompany the order. Postage stamps will not be received.

Final fees will NOT be received from other than the applicant, his assignee or attorney, or a party in interest as shown by the records of the Patent Office.

Respectfully,

J. T. Newton

Thomas Ewing

Commissioner of Patents.

Pennie, Davis & Goldsborough

35 Nassau Street,

New York, N. Y.

6—1918

IN REMITTING THE FINAL FEE GIVE THE SERIAL NUMBER AT THE HEAD OF THIS NOTICE.

UNCERTIFIED CHECKS WILL NOT BE ACCEPTED.

MAIL ROOM JUN 3 1913 U.S. PATENT OFFICE

Washington, D.C.,

June 3, 1918.

Hon. Commissioner of Patents,

Washington, D.C.

Sir:-

Final fees are being paid today in the following cases of Marcus C. Hopkins, 778,826, Renewal 224,048, Sound Regenerating Machine; 808,577, Renewal 224,049, Sound Regenerating Machine; and 229,014, Acoustic Device. It is requested that the case first identified be given the lowest patent number.

Very respectfully,

Prouty, Davis, Marvin & Edmonds

$20 REC'D JUN 3 1918 U.S. PAT. OFFICE

2-327.

2036

MEMORANDUM

OF

FEE PAID AT UNITED STATES PATENT OFFICE.

(Be careful to give correct Serial No.)

Serial No. 778,826 ~~Re. 224,048~~ June 1, 1918.

INVENTOR:

MARCUS C. HOPKINS

PATENT TO BE ISSUED TO

LEKTOPHONE CORPORATION

NAME OF INVENTION, AS ALLOWED:

SOUND REGENERATING MACHINE

DATE OF PAYMENT:

June 3, 1918.

FEE:

TWENTY DOLLARS

DATE OF FILING:

March 22, 1918,

DATE OF CIRCULAR OF ALLOWANCE:

May 1, 1918.

The Commissioner of Patents will please apply the accompanying fee as indicated above.

Pennie, Davis & Edmonds
Attorneys

SEND PATENT TO

PENNIE, DAVIS, MARVIN & EDMONDS,

35 Nassau Street,

New York City.

6-1916

JOHN C. PENNIE
WILLIAM H. DAVIS
ARBA B. MARVIN
DEAN S. EDMONDS
F. E. BARROWS
W. B. MORTON
WALTER J. GILL, JR.
G. J. HERSELMAN
CLINTON W. SAGE
E. H. MERCHANT
A. S. McDANIEL
W. H. TAYLOR, JR.
V. T. HOUGHTON
H. T. FISHER
DAVID WEILD

PENNIE, DAVIS, MARVIN AND EDMONDS
COUNSELLORS AT LAW
35 NASSAU STREET

WASHINGTON OFFICES
910 WASHINGTON LOAN & TRUST BLDG.
WASHINGTON, D. C.
NEW YORK CABLE ADDRESS
PENANGOLD NEW YORK
WESTERN UNION CODE
TELEPHONE 1127 RECTOR

NEW YORK August 24, 1920.

B

2036

Honorable Commissioner of Patents,

Washington, D.C.

S[illegible] R :

In comparing our office copy of the file wrapper with the original deed of patent No. 1,271,527 issued on the second day of July, 1918 to Marcus C. Hopkins, for Sound Regenerating Machine, we note the following errors occurring in the printed copy:

Page 1, line 25, "magaphone" appears for - megaphone -;

Page 5, lines 75 and 95; page 6, line 25, "long" appears for - large -.

We are enclosing the original patent deed herewith and request that you kindly issue a certificate of correction covering these inaccuracies.

Very respectfully,

Pennie, Davis, Marvin & Edmonds

ENCLOSURE

Approved

SEP 16 1920

[illegible]
Commissioner of Patents

ADDRESS ONLY
THE COMMISSIONER OF PATENTS
WASHINGTON, D. C.

LETTER No.

DEPARTMENT OF THE INTERIOR
UNITED STATES PATENT OFFICE
WASHINGTON

7 September 1920.

In the matter of
Letters Patent No. 1,271,527,
Marcus C. Hopkins,
Sound-Regenerating Machines,
July 2,1920
Pennie,Davis,Marvin and Edmonds,attorneys.

REPORT OF THE ACTING CHIEF OF THE ISSUE AND GAZETTE DIVISION.

The attorneys return the Letters Patent with a request that a certificate of correction be issued correcting the following errors:

1. Page 1, line 25, "magaphone" should be megaphone
2. Page 5, lines 75 and 95, page 6, line 25 the word "long" should be large

The first error is chargeable to the printer. The second error is caused through the incorrect entry of a portion of amendment "D" paper 9, filed March 28,1916.

Respectfully,

John Hams

Acting Chief of Issue and Gazette Division

To The Commissioner of Patents. have been checked and are found

The errors referred to ~~appear~~ to have occurred in the manner alleged by the Chief of the Issue and Gazette Division.

Respectfully,

H. D. Emerson

Exr. Div. 23

October 6, 1920.

Messrs. Pennie,Davis,Marvin & Edmonds,
35 Nassau Street,
New York, N. Y.

Sirs:

Herewith please find Letters Patent No. 1,271,527, granted July 2, 1918,upon the application of Marcu C. Hopkins, returned to you with a certificate of correction endorsed thereon in accordance with your request.

Respectfully,

Wm.I.Wyman,
Chief Clerk.

MAIL ROOM NOV 12 1924 U.S. PATENT OFFICE

United States District Court

Southern District of New York.

#17

HONORABLE COMMISSIONER OF PATENTS,
Washington, D. C.

SIR:

In compliance with the Act of February 18, 1922 (~~41~~ 42 Stat. L. 392), you are advised that there was filed on the 10th day of November, 1924, in this court an action, suit, or proceeding No. 830-256, entitled:

Name Lektophone Corporation, Plaintiff,
Address Jersey City, New Jersey.

versus

Name Western Electric Company Inc., Defendant,
Address New York, N.Y.

brought upon the following patents:

	PATENT NO.	DATE OF PATENT	PATENTEE
1	1271,527	July 2nd 1918	Lektophone Company.
2			
3			
4			
5			

In the above-entitled case, on the ..... day of ....., 192 ,
the following patents have been included by ..... (insert amendment, answer, cross bill, or other pleading):

	PATENT NO.	DATE OF PATENT	PATENTEE
1			
2			
3			
4			
5			

In the above-entitled case the following decision has been rendered or decree issued:

In witness whereof I have affixed my hand this 11th day of November, 1924, at New York, N.Y.

Alex Gilchrist Jr.
Clerk of said Court.

MAIL ROOM FEB 13 1925 U.S. PATENT OFFICE

United States District Court

Southern District of New York

#18

HONORABLE COMMISSIONER OF PATENTS,
Washington, D. C.

SIR:

In compliance with the Act of February 18, 1922 (~~41~~ 42 Stat. L. 392), you are advised that there was filed on the 13th day of February, 1925, in this court an action, suit, or proceeding No. E 31-171, entitled:

Name Telephone Corporation, Plaintiff,

Address Jersey City N.J.

versus

Name Vitalis Hummer Jr., Defendant,

Address N.Y. N.Y.

brought upon the following patents:

	PATENT NO.	DATE OF PATENT	PATENTEE
1.	1271527	July 2 1918	Marcus B Hopkins
2.			
3.			
4.			
5.			

In the above-entitled case, on the ..... day of ....., 192

the following patents have been included by ..... (insert amendment, answer, cross bill, or other pleading):

	PATENT NO.	DATE OF PATENT	PATENTEE
1.			
2.			
3.			
4.			
5.			

In the above-entitled case the following decision has been rendered or decree issued:

In witness whereof I have affixed my hand this 14th day of February, 1925, at New York N.Y.

Alexander Gilchrist Jr
Clerk of said Court

MAIL ROOM MAY 26 1925

United States District Court

Eastern District of New-York

#19

HONORABLE COMMISSIONER OF PATENTS,
Washington, D. C.

SIR:

In compliance with the Act of February 18, 1922 (42 Stat. L. ...), you are advised that there was filed on the 3rd day of March, 1925, in this court an action, suit, or proceeding No. 2075, entitled:

Name Lektophone Corp, Plaintiff,
Address Jersey City, N J

versus

Name Sylo Lighting Fixture Co, Defendant,
Address 166 Flatbush Ave., Brooklyn New York

brought upon the following patents:

	PATENT NO.	DATE OF PATENT	PATENTEE
1.	1271527	July 2, 1918	Plaintiff as Assignee
2.	1271529	" "	" " "
3.			
4.			
5.			

In the above-entitled case, on the ... day of ..., 192..., the following patents have been included by ... (insert amendment, answer, cross bill, or other pleading):

	PATENT NO.	DATE OF PATENT	PATENTEE
1.			
2.			
3.			
4.			
5.			

In the above-entitled case the following decision has been rendered or decree issued:

In witness whereof I have affixed my hand this 25th day of May, 1925, at Brooklyn New York

Percy J. Blake

Form 788

#20

MAIL ROOM NOV 3 1925 U.S. PATENT OFFICE

United States District Court

District of NEW JERSEY

HONORABLE COMMISSIONER OF PATENTS,
Washington, D. C.

SIR:

In compliance with the Act of February 18, 1922 (42 ~~Stat.~~ Stat. L. ....., you are advised that there was filed on the 4th day of September, 1925, in this court an action, suit, or proceeding No. E-1431, entitled:

Name Lektophone Corporation, Plaintiff,

Address Jersey City, N. J.

versus

Name De Forest Radio Company, Defendant,

Address 139 Franklin St., Jersey City, N. J.

brought upon the following patents:

	PATENT NO.	DATE OF PATENT	PATENTEE
1	1,271,527	July 14, 1913	Marcus C. Hopkins
2	1,271,529	July 14, 1913	Marcus C. Hopkins
3			
4			
5			

In the above-entitled case, on the ..... day of ....., 192 , the following patents have been included by .....(insert amendment, answer, cross bill, or other pleading):

	PATENT NO.	DATE OF PATENT	PATENTEE
1			
2			
3			
4			
5			

In the above-entitled case the following decision has been rendered or decree issued:

.....

.....

In witness whereof I have affixed my hand this 28th day of October, 1925, at Trenton, N. J.

George T. Cranmer
Clerk of said Court

R. S. Cherries, Deputy

M. C. HOPKINS.

SOUND REGENERATING MACHINE.

APPLICATION FILED JULY 14, 1913. RENEWED MAR. 22, 1918.

1,271,527.

Patented July 2, 1918.

5 SHEETS—SHEET 1.

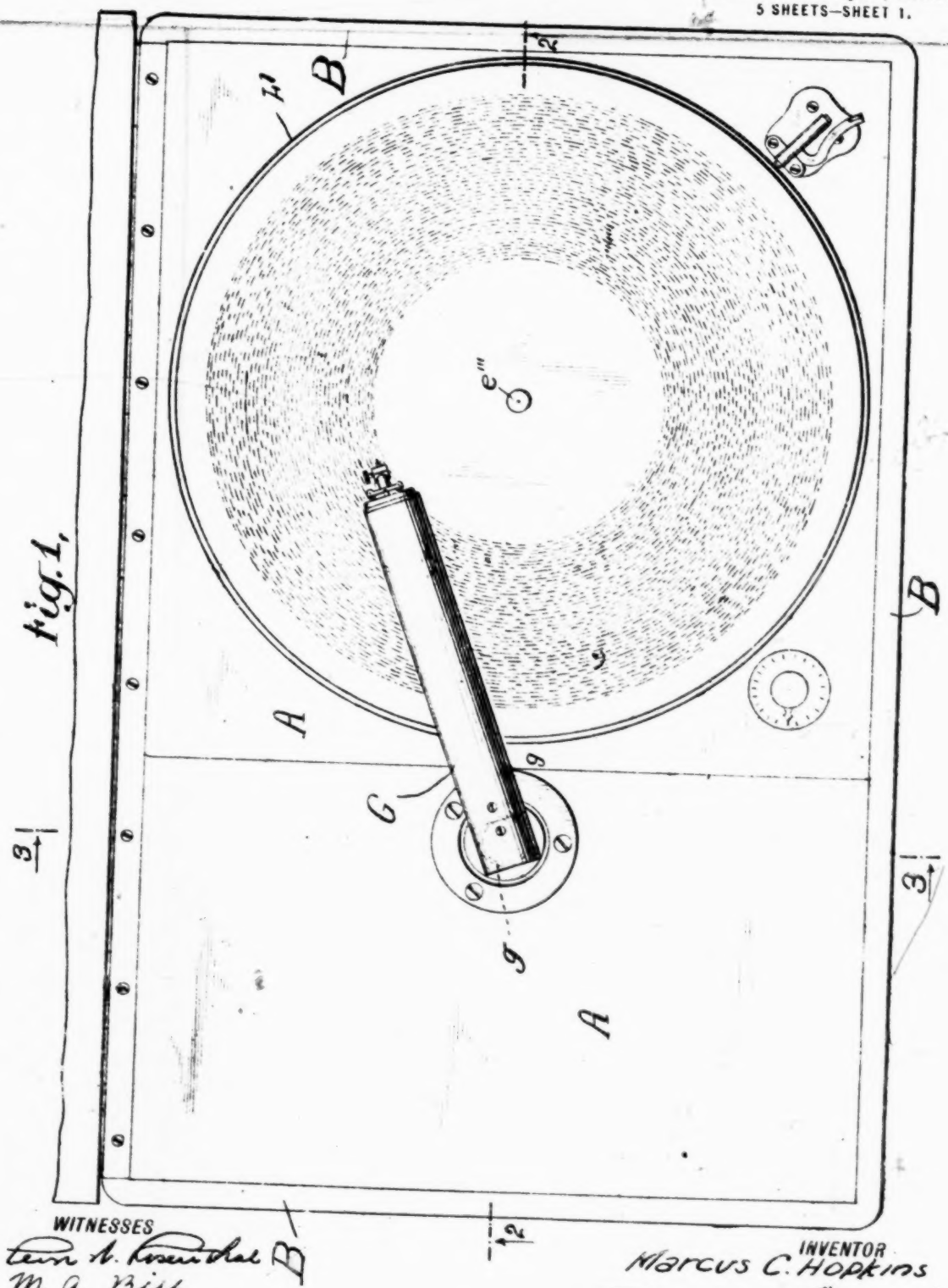

Fig. 1.

WITNESSES

Louis A. Rosenthal

M. A. Bill

INVENTOR

Marcus C. Hopkins

BY

Louis Davis Goldsmith

ATTORNEYS

M. C. HOPKINS.

SOUND REGENERATING MACHINE.

APPLICATION FILED JULY 14, 1913. RENEWED MAR. 22, 1918.

1,271,527. Patented July 2, 1918.

5 SHEETS—SHEET 2.

Fig. 2.

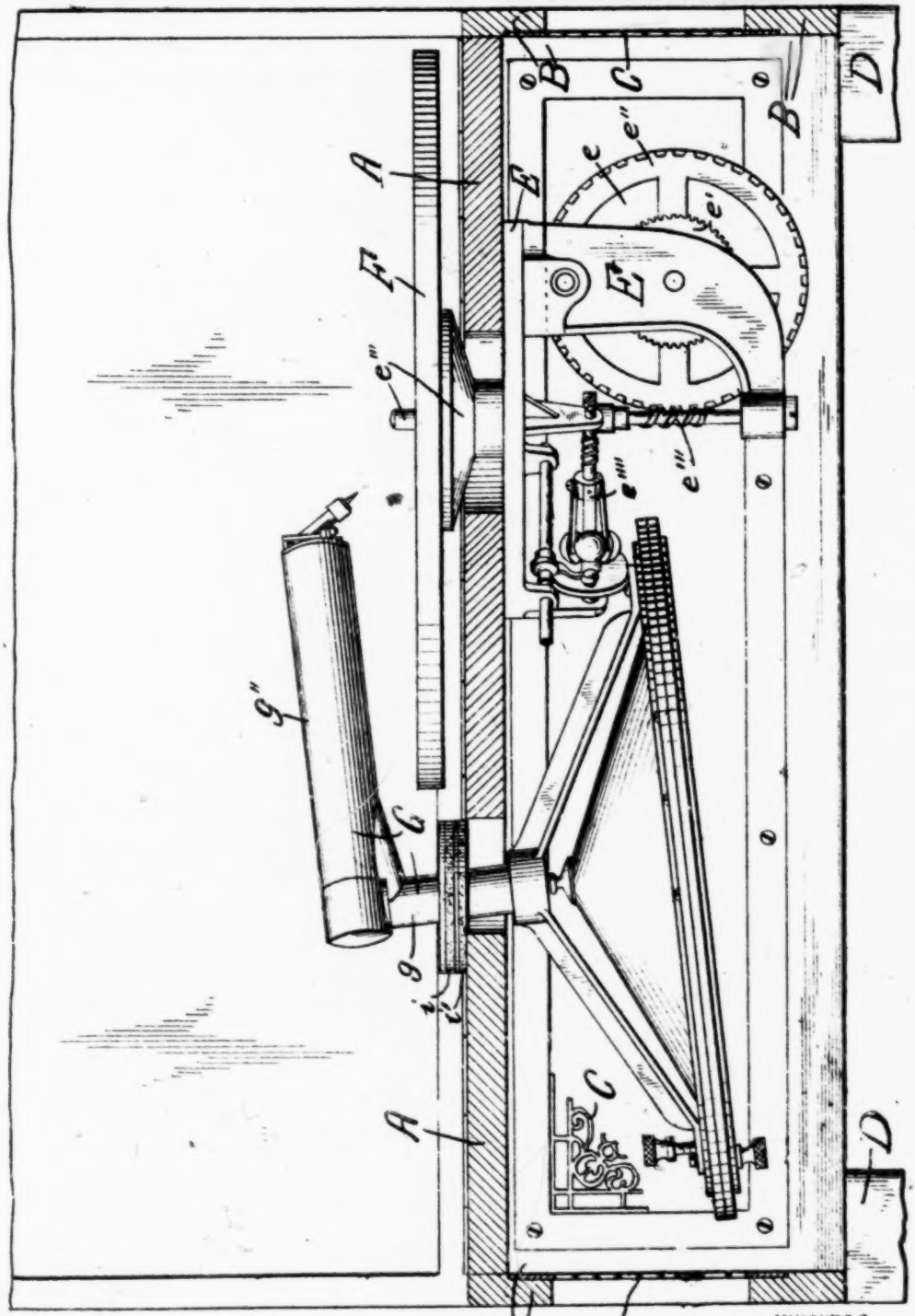

WITNESSES

Leon H. Rosenthal

M. A. Bill

INVENTOR

Marcus C. Hopkins

BY

Pennie Davis & Goldsborough

ATTORNEYS

M. C. HOPKINS.

SOUND REGENERATING MACHINE.

APPLICATION FILED JULY 14, 1913. RENEWED MAR. 22, 1918.

1,271,527.

Patented July 2, 1918.

5 SHEETS—SHEET 3.

Fig. 3.

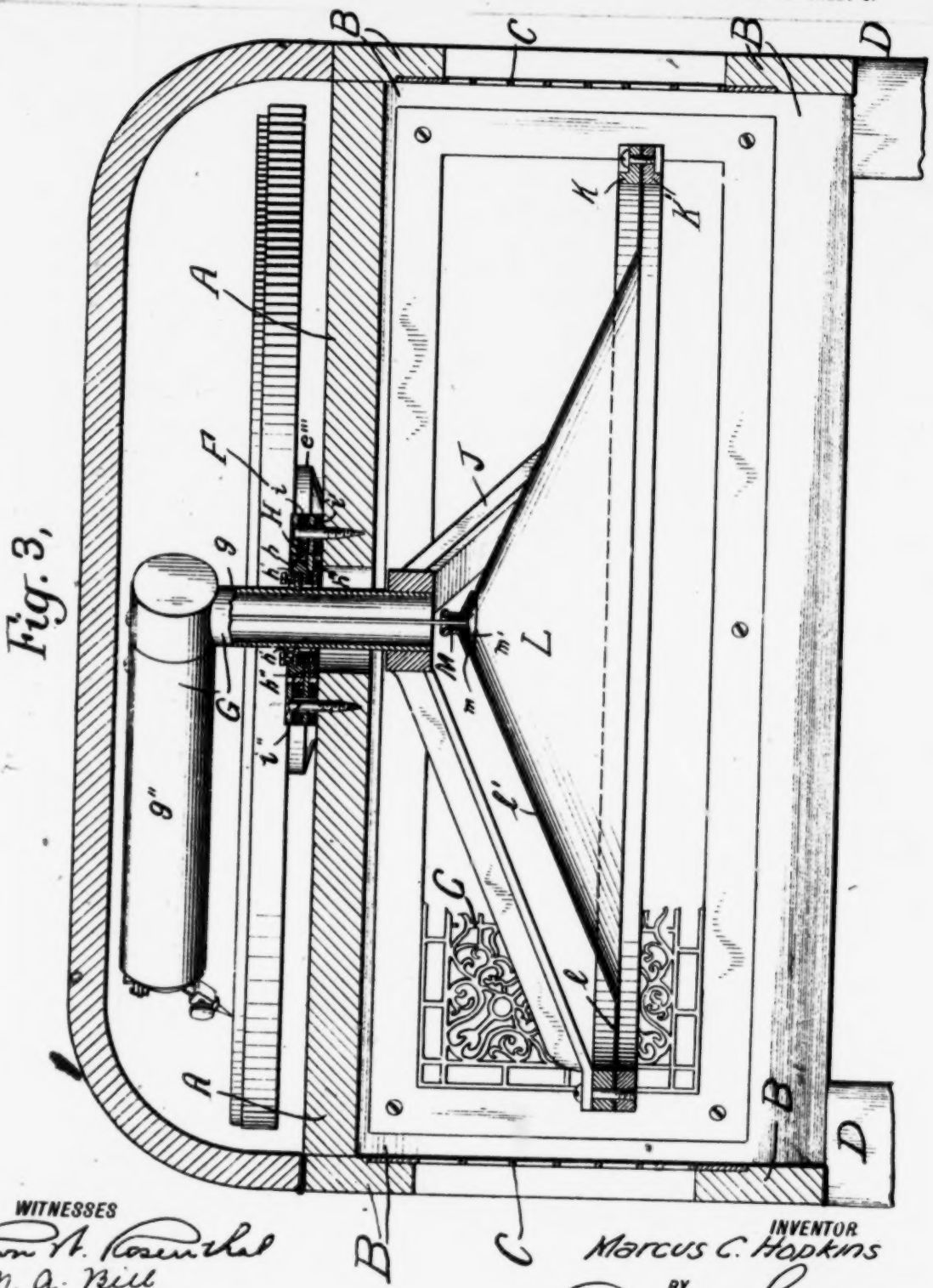

WITNESSES

Lewis A. Rosenthal

M. A. Bill

INVENTOR

Marcus C. Hopkins

BY

Pennie Davis & Edmonds

ATTORNEYS

M. C. HOPKINS.

SOUND REGENERATING MACHINE.

APPLICATION FILED JULY 14, 1913. RENEWED MAR. 22, 1918.

1,271,527.

Patented July 2, 1918.

5 SHEETS—SHEET 4.

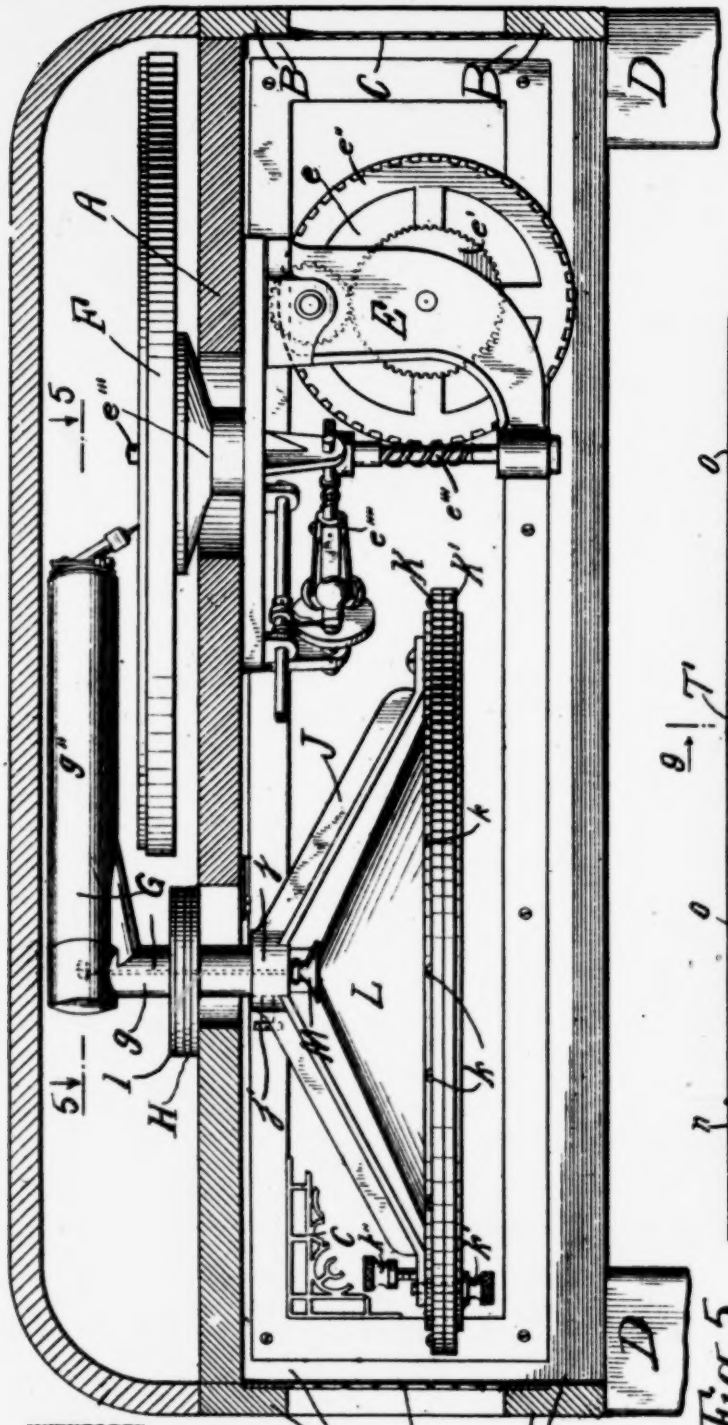

Fig. 4.

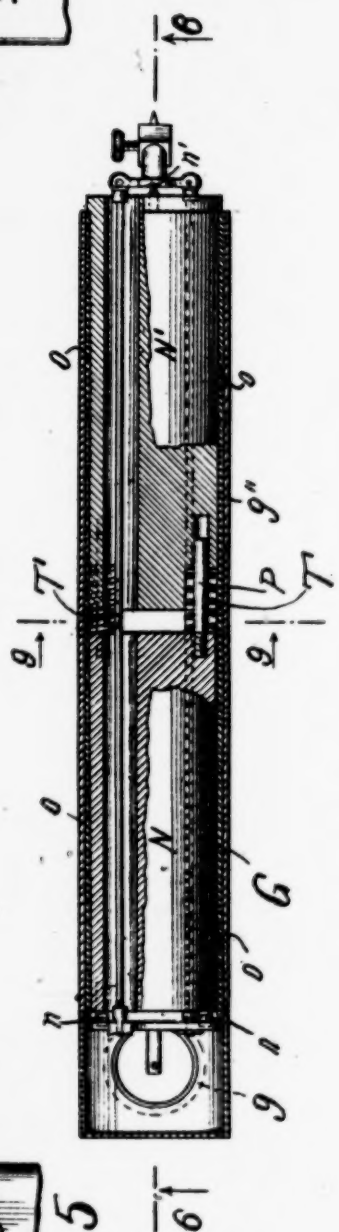

Fig. 5.

WITNESSES

Leon A. Rosenthal

M. A. Rice

INVENTOR.

Marcus C. Hopkins

BY

Pennie Davis & Goldstone

ATTORNEYS

M. C. HOPKINS.

SOUND REGENERATING MACHINE.

APPLICATION FILED JULY 14, 1913. RENEWED MAR. 22, 1918.

1,271,527. Patented July 2, 1918.

5 SHEETS—SHEET 5.

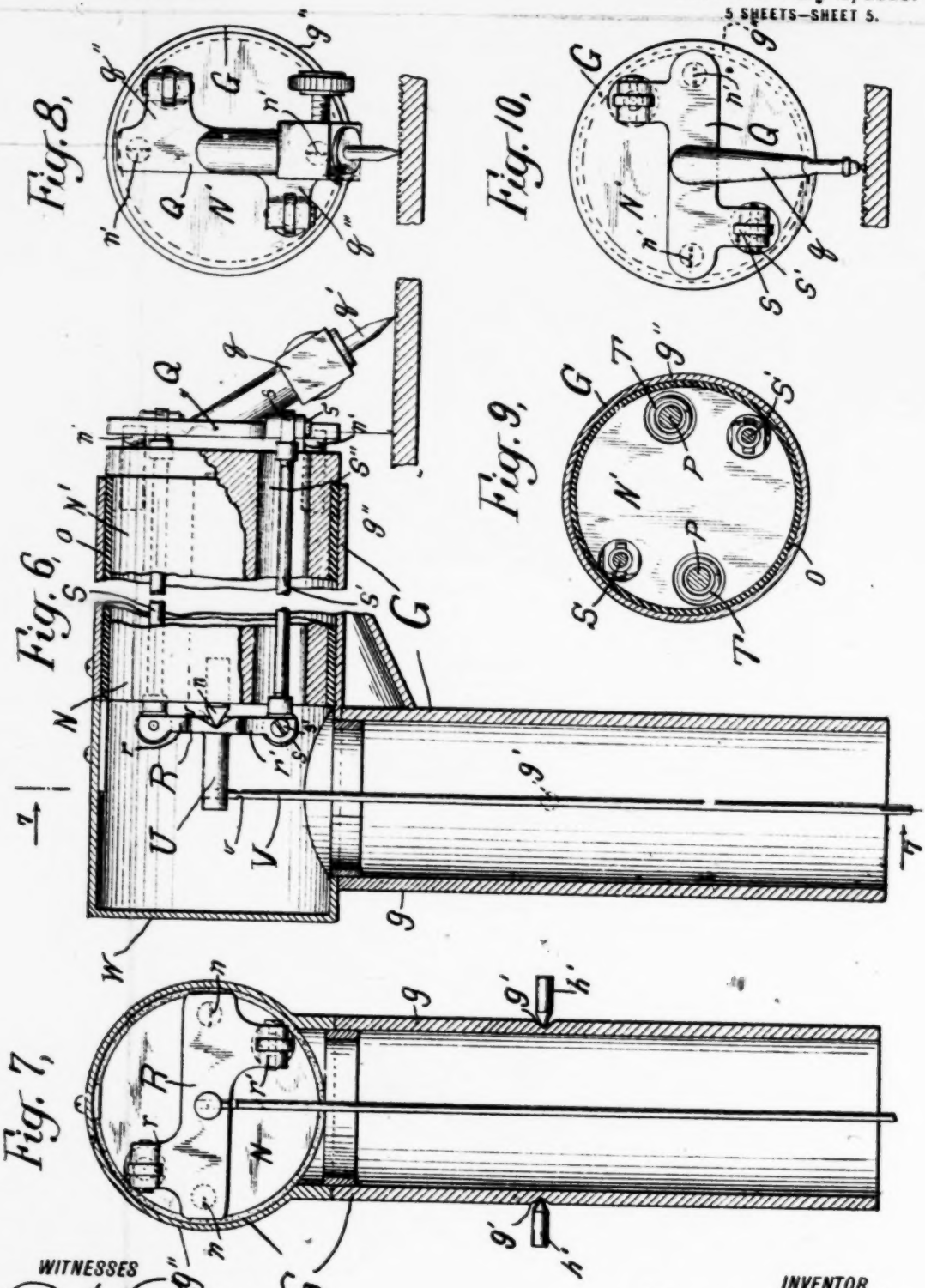

WITNESSES

Leon H. Rosenthal

M. A. Bill

INVENTOR

Marcus C. Hopkins

BY

Pennie Davis & Golasmoney

ATTORNEYS

UNITED STATES PATENT OFFICE.

MARCUS C. HOPKINS, OF JERSEY CITY, NEW JERSEY, ASSIGNOR, BY MESNE ASSIGNMENTS, TO LEKTOPHONE CORPORATION, OF NEW YORK, N. Y., A CORPORATION OF DELAWARE.

SOUND-REGENERATING MACHINE.

1,271,527. Specification of Letters Patent. Patented July 2, 1918.

Application filed July 14, 1913, Serial No. 778,828. Renewed March 22, 1918. Serial No. 224,048.

To all whom it may concern:

Be it known that I, MARCUS C. HOPKINS, a citizen of the United States, residing at No. 2859 Boulevard, Jersey City, county of Hudson, and State of New Jersey, have invented certain new and useful Improvements in Sound-Regenerating Machines; and I do hereby declare the following to be a full, clear, and exact description of the invention, such as will enable others skilled in the art to which it appertains to make and use the same.

This invention relates to instruments which reproduce sounds, such as the talking machine and the phonograph, and is particularly directed to the attainment of a direct propagation in free air from a record of self-sustaining sound waves substantially corresponding to the original recorded sounds in intensity or amplitude as well as in pitch and timbre, as distinguished from an initial generation of violent air disturbances in a confined space, and a subsequent transformation of such disturbances into self-sustaining sound waves by means of the magaphone or trumpet, commonly employed with most existing machines.

The device employed to propagate such regenerated sound waves in air from a record I herein term a "regenerator," and, this device in the phonograph and talking machine comprises the "reproducer" together with the trumpet. The "reproducer" alone is incapable of generating such sound waves in air, and the violent air disturbances which are produced by its diaphragm, and which issue through its mouth piece, are almost immediately dissipated in heat or in waves, which are not heard at any considerable distance if the horn be removed.

In the case of the "reproducer," all of the energy received from the record issues from its mouth as relatively violent disturbances, which are impressed upon a very small amount of free air, quite incapable of conducting such disturbances without transformation losses, and therefore the trumpet is resorted to to resist transformation into heat and to control the lateral form of the wave during a progressive spreading action, which is accompanied by a lessening of the violence of the disturbances, until a wave front of great area is attained having a movement appropriate to the sound conductivity of air. In this way it has been found practicable to transform a satisfactory part of the energy obtained from a moving record, into self-sustaining sound waves in air, but in every instance this method has been accompanied by distortions of the true recorded sounds in the reproducer, and more particularly in the trumpet, giving rise to those characteristic sounds, known as phonograph and horn sounds. These distortions of the true sounds are in a measure impressed upon the record in its making, but are more noticeable in the reproduction where a suppression of character and overtones, the loss of "timbre" in instruments and the voice, and the accentuation of notes of certain pitch, so change the recorded number that a faithful reproduction is not obtained.

It is an object of the present invention to regenerate the recorded sounds directly from the record, without the interposition of a confined body of air and without the employment of a restrictive transformer, such as a horn.

The "sound regenerator," in the case of the present invention, comprises a tympanum of relatively great area freely exposed to unconfined air, in which the sounds are to be propagated, and a mechanical transmission which faithfully transmits the vibrations produced by the record, to the tympanum, in such manner that the tympanum excites directly in the free air surrounding it sound waves of an intensity or amplitude substantially corresponding to the original recorded sound waves. In other words, the original sounds are directly regenerated by the vibrating tympanum without the interposition of a restrictive or sound modifying transformer.

The invention consists in providing a tympanum of novel construction, which is capable of responding to the high frequency vibrations employed in the reproduction of sounds, and of imparting these vibrations to a large body of air; in providing a suitable mounting for this tympanum to permit it to exercise its function; and in providing a vibration transmission for receiving the vibratory movement from the record and transmitting this movement to the tympanum, without change of character and ap-

preciable loss of energy. The invention also comprehends certain combinations of parts and details of construction and location hereinafter particularly described and specifically pointed out in the appended claims.

I have illustrated in the accompanying drawings a sound reproducing machine embodying the several novel features of the invention as they may be employed in regenerating sounds from records made with either laterally or vertically sinuous grooves.

In the drawings,

Figure 1 is a plan view of the machine with the cover raised.

Fig. 2 is a vertical section on line 2—2 of Fig. 1, with cover and transmission arm raised.

Fig. 3 is a vertical section on line 3—3 of Fig. 1 with cover closed.

Fig. 4 is a vertical section on line 2—2 of Fig. 1 with cover closed and transmission arm in playing position.

Fig. 5 is a longitudinal section through the transmission arm on line 5—5 of Fig. 4.

Fig. 6 is a vertical longitudinal section through the transmission arm on line 6—6 of Fig. 5.

Fig. 7 is a vertical section on line 7—7 of Fig. 6.

Fig. 8 is an end view of the transmission arm.

Fig. 9 is a cross-section on line 9—9 of Fig. 5, and

Fig. 10 is a view similar to Fig. 8 of a modified arrangement for vertically sinuous records.

Referring to the drawings, the illustrated machine is mounted within a cabinet having a deck A upon which the motor and sound regenerator are supported. Side walls B downwardly extending from the edges of the deck A are preferably apertured on all sides and provided with open work grilles C which afford substantially uninterrupted air paths for the sound waves from the interior of the cabinet in all directions laterally to the surrounding atmosphere. In the machine shown the cabinet is bottomless and provided with legs D at its four corners.

The motor may be of any suitable type, that shown having a frame E, spring drums e, winding gear e', spiral drive gear e'', high pitch spiral table shaft e''' and governor e''''. The frame E of the motor is secured against the under side of the deck A depending therefrom and the table shaft projects upwardly through the deck A and carries the circular record table F above the deck. The motor frame E is preferably insulated from the deck A by rubber washers not shown.

The sound regenerator has a right-angled tubular support G, the vertical arm g of which has diametrically opposite conical depressions g' which are engaged by pointed screws h' which project inwardly from and are threaded through a ring h of larger internal diameter than the external diameter of the vertical arm g of the right-angled support G. The pointed screws h' engage the depressions g' forming a horizontal axis perpendicular to the horizontal arm g'' of the right-angled support G about which axis the arm g'' can swing in a vertical plane, the vertical arm g the while being inclined within the ring h. The ring h comprises the ring h proper and an annular retaining plate h'' screwed upon the lower face of the ring h, an annular groove at the junction of the ring h and plate h'' receiving the inner edge of a holding plate H in such manner that the ring h and the right-angled support G may be turned about a vertical axis in the holding plate H.

The holding plate H is clamped between two rubber or felt rings i, i', the lower ring i' resting upon the deck A. A ring I is placed upon the top of the upper ring i and screws i'' have their heads seated in the ring I and are screwed down into the deck A. The ring H and the rubber or felt rings i and i' have large holes through which the screws i'' pass, so that these screws do not come into contact with the ring H and the right-angled support G is therefore entirely insulated from the deck A by the rubber or felt rings. The vertical arm g of the right-angled support G extends downwardly through an aperture in the deck A at a point near the periphery of the record table F. A conical spider J shown as having three arms has its hub j fitted to the lower extremity of the vertical arm g of the right-angled support G, and is secured thereon by a set screw j'. To the ends of the arms of the spider J is secured by screws an annulus consisting of two ponderous rings K, K' of metal, these two rings being clamped together by screws k spaced at short intervals. Two of the three arms of the said spider are screwed tightly to the rings K, K' and the third is not tightly secured to said rings but by adjustable screws k' k'' arranged in such manner that the rings K, K' can be secured at varying distances from the foot of this third leg, there being sufficient spring in the spider legs to permit of an adjustment at this point of one-quarter of an inch or so, if desired. It will be seen that owing to the proximity of the mounting of the vertical arm g of the right-angled support G to the edge of the record table F, the spider J and the rings K, K' will underlie the record table and permit of a very compact arrangement of the working parts within the cabinet.

A tympanum L of light vibratile material has an annular plane peripheral portion l, the outer edge of which peripheral

portion or supporting rim *l* is tightly gripped and rigidly supported between the ponderous rings K, K′, and a central conical portion *l′* rising from the inner edge of the annular plane peripheral portion. If satisfactory regeneration of sounds from a record is to be had, the whole diameter of the tympanum, that is, the diameter of the aperture in the rings K, K′, should exceed nine inches in order that the conditions shall be fulfilled which are required to regenerate the sound waves in the manner above described. The base of the central conical portion *l′* of the tympanum should exceed in area one-half the effective area of the entire tympanum, that is, the area of the aperture in the rings K, K′; or in other words, the diameter of the base of said conical portion should be at least eight-tenths of the diameter of the circular aperture in the supporting rings K, K′. The altitude of the conical portion *l′* of the tympanum should be at least one-quarter of the diameter of its base. It is, of course, possible to make some variation from the approximate sizes given without materially altering the result, but if the tympanum is made as shown in the drawings, any great variation from these proportions will be found to affect the character of the reproduction. It is of vital importance that the tympanum be made of crisp, strong material, having considerable rigidity within itself, and it is also of vital importance that the tympanum as a whole be extremely light and have as little inertia as possible without a weakening effect. The tympanum is shown of conical form with a smooth surface, and this has been found to be very satisfactory. The conical shape is given the tympanum so that shocks or vibrations impressed upon the apex of the cone in a direction toward its base will move the whole cone bodily, the strains being imparted edgewise of the material and no wave motions being set up in the thin material of the cone. The curvature of the walls of the cone preclude the setting up of waves in the material and the intended object, a simultaneous movement of the whole conical portion of the tympanum, is attained. While I prefer to construct the tympanum in the form described and shown with a smooth surface, especially in view of the ease of construction, yet it is possible to form radial corrugations in the conical portion *l′* and radial or concentric corrugations in the plane peripheral portion *l* and produce a light, stiff and very satisfactory article for the purpose. It is possible that when the tympanum is provided with corrugations as just suggested, some variation from the proportions above given may be found possible, and perhaps advisable, but such variations from the proportions given will not be great. The tympanum should preferably be constructed of a colloidal substance and should be from 3 to 20 thousandths of an inch in thickness according to the crispness or stiff character of the material used. Compressed fibrous material, such as hot pressed paper or fiber, has been found to act satisfactorily. It will be noted that the arms of the spider J incline downwardly to correspond with the conical shape of the tympanum L and that the apex of the conical portion of the tympanum is pointed upwardly toward the deck A of the cabinet, and that the concave side of the tympanum is open to the surrounding atmosphere through the open bottom of the cabinet, no obstructions being presented to the sound waves issuing from the concave surface of the tympanum.

A cap M is secured to the apex of the conical portion *l′* of the tympanum L, and this cap should be of more rigid construction than the remainder of the tympanum and should preferably be three-eighths of an inch or more in diameter. I prefer to make the cap M of metal, extremely light but very rigid, and in the form of two cones *m*, *m′* screwed tightly together upon opposite sides of the tympanum and gripping with their edges the material of the conical portion of the tympanum. In order that a tight and positive application of the cones forming the cap M to the conical portion of the tympanum may be had, it is preferable to form the cone *m′* of lesser angle than the conical portion of the tympanum, and the cone *m* of greater angle than the conical portion of the tympanum in which case their edges will securely grip the tympanum material when they are secured together. The cap M is applied to the tympanum to receive the shocks which are to be applied to the tympanum as a whole, and convey them to sufficient of the material of the tympanum to insure the movement of the tympanum as a whole. This will be better understood when it is considered that if the shock were applied to paper or hard rubber at a single small point, the inertia of the tympanum as a whole would be sufficient to resist the attack and the material would be distorted or dented at that point, the effect of the shock upon the tympanum as a whole being entirely lost. The cap M being of hard material such as metal will resist the bending action and distribute the shock to so much of the surface of the material of the tympanum as is capable of successfully resisting the shock, and it will then be transmitted to the tympanum as a whole. The plane peripheral portion *l* of the tympanum maintains the place of the conical active portion of the tympanum and yields sufficiently to permit of the required motion of the conical portion, resisting, however, displacement of the conical portion in just that degree neces-

sary to maintain the form and neutral position of the active conical portion. Were the plane peripheral portion *l* of considerably greater width or markedly narrower than described, its function would be destroyed to a degree corresponding to the remoteness of the daparture from the approximate proportion given and the effective portion of the conical portion of the tympanum would be proportionately lessened.

In the tubular arm *g''* of the transmission support G are located two ponderous members or weights N and N'. These members N and N' are shown as insulated from the wall of the arm *g''* by a tube *o* of insulating material, such as soft rubber or felt. One at least of the ponderous members N and N' must be movable relatively to the other and therefore it cannot be rigidly secured to the support G, and the insulating material becomes necessary to avoid rattling. I preferably insulate both of the ponderous members or weights N, N' from the wall of the transmission support G. Pins P projecting from the ponderous member N, and sliding in holes in the other ponderous member N', act as guides and prevent disalinement and angular displacement of the movable ponderous member. Knife edge fulcra *n* and *n'* are secured in and project from the ends of the ponderous members N and N', and in the form of the device shown in Figs. 1 to 9 the fulcra *n* are arranged horizontally and the fulcra *n'* are arranged vertically. A lever Q is mounted on the fulcra *n'* and is capable of movement upon a vertical axis. A style holder *q* projects from the lever Q downwardly at an incline so that the point of a style *q'* held in the style holder is considerably removed from the axis of the lever Q and movement given the style *q'* by the record will effect an oscillation of the lever Q about its vertical axis upon the fulcra *n'*. The lever Q has arms *q''* and *q'''* projecting from opposite sides thereof, the arm *q''* being near the top of the lever Q and the arm *q'''* being near the bottom of said lever. The reason for this arrangement of the arms upon the lever will presently appear.

A lever R is mounted upon the fulcra *n* and oscillates upon a horizontal axis. This lever has arms *r* and *r'* extending upwardly and downwardly from its opposite sides, the arm *r* projecting from a point near one end of the lever R, and the arm *r'* projecting from a point near the other end of the lever R. It will now be seen that a point upon the arm *r* of the lever R is opposite a similar point on the arm *q''* of the lever Q and these two points are connected by rod link S. It will also be seen that a point upon the arm *r'* of the lever R is opposite a point upon the arm *q'''* of the lever Q, and these two points are connected by a rod link S'. The rod links S and S' have eye-ends arranged in planes removed 90° from one another, and these eye-ends *s* are engaged by pivot screws *s'* upon the arms of the levers Q and R. A parallelogram is formed by the levers Q and R and the rod links S and S', and in the form just described, which is adapted for a laterally sinuous groove in the record, oscillation of the lever Q about a vertical axis will produce like oscillations of the lever R about a horizontal axis. Springs T preferably mounted upon the pins P press the ponderous members N and N' apart forcing the knife edge fulcra *n* and *n'* tightly against the levers R and Q, and put the parallelogram of levers and links under tension, precluding any rattle or looseness of the levers upon the fulcra or of the eye-ends of the links upon their pivot screws, and as the movable ponderous member of the combination is insulated from the transmission support G, no rattle or displacement of the parts can take place when the record groove oscillates the lever Q, but such oscillation will be faithfully transmitted to the lever R. The ponderous members N and N' have clearance holes *s''* for the rod links S and S'.

An arm U projects from the central portion of the lever R and to its end is rigidly secured a rod V which extends downwardly through the interior of the arm *q* of the transmission support G, its lower end being rigidly secured to the cap M of the tympanum. The rod V is nicked or thinned at *v* close to the arm U of the lever R to permit of a slight springing action which compensates for the very slight angular motion of the arm U when the lever R is oscillated. It will now be seen that the oscillation of the lever R about its horizontal axis imparted to it from the lever Q, will effect an endwise vibration of the rod V which is directly impressed upon the tympanum L. A cap W closes the opening at the angle of the transmission support G and the removal of this cap gives access to the working parts of the rear end of the transmission.

It will be noted that the distance between the point of the style *q'* and the axis of the lever Q is greater than the length of the arm U which projects from the center of the lever R and to which the rod V is connected. By reason of this fact, and of the fact that the levers Q and R, and the rod links S, S' form a parellelogram, the length of vibration of the tympanum is relatively much less than that of the style, and the tympanum thus offers little resistance to the movement of the style, thereby greatly reducing the wear on the record. To compensate for this small movement of the tympanum, its large area enables it to move a large body of air, so as to obtain sound waves of large volume and great carrying power.

When a vertically sinuous record is em-

ployed the lever Q is mounted to oscillate about a horizontal axis, as shown in Fig. 10, no change in the lever R being required.

Having thus described my invention, what I claim and desire to secure by Letters Patent, is:—

1. In a machine for directly regenerating sound from a record of the same, a vibratile conical tympanum of large area rigidly supported at its periphery and freely exposed to unconfined air, and a mechanical transmission through which the vibrations produced by the record are transmitted to the tympanum; the tympanum being of sufficient area to impart to the surrounding free air, when the tympanum is so vibrated, sound waves substantially corresponding in intensity to the recorded sound waves; substantially as described.

2. In a machine for directly regenerating sound from a record of the same, a vibratile conical tympanum of large area rigidly supported at its periphery and freely exposed to unconfined air, a mechanical transmission through which the vibrations produced by the record are transmitted to the tympanum, the tympanum being of sufficient area to impart to the surrounding free air, when the tympanum is so vibrated, sound waves substantially corresponding in intensity to the recorded sound waves, and an open-work cabinet inclosing the tympanum but affording substantially free access of the surrounding air thereto; substantially as described.

3. In a direct sound regenerating machine, the combination of a record holder, a transmission support mounted to swing over said record holder, and a tympanum carried by said support and extending under said record holder; substantially as described.

4. In a direct sound regenerating machine, the combination with a record holder, of a transmission support mounted to swing about vertical and horizontal axes, said support having an arm extended to move above and across said record holder and adapted to carry a stylus, the support having a second arm having a free end, and a tympanum carried at the free end of said second arm with its axis at an angle to said first arm; substantially as described.

5. In a sound regenerating machine, a vibration transmission comprising two ponderous members, fulcra carried by said members, an articulate parallelogram having opposite sides mounted on said fulcra and means exerting pressure upon said ponderous members to place said parallelogram under tension; substantially as described.

6. In a sound regenerating machine, a vibration transmission comprising two ponderous members, fulcra carried by said members, an articulate parallelogram of non-extensible links and non-flexible levers, the levers of said parallelogram being mounted on said fulcra, and means exerting pressure upon said ponderous members to place said parallelogram under tension; substantially as described.

7. In a machine for directly regenerating sound from a record of the same, a tympanum support having a circular aperture, a light vibratile tympanum of long area having its outer edge rigidly mounted in said support, said tympanum being shaped to provide an annular sustaining rim adjacent said support, and a conical portion springing from the inner edge of said annular rim, a cap of non-vibratile material rigidly secured to the apex of said conical portion of said tympanum, and a mechanical transmission through which the vibrations produced by the record are transmitted to the tympanum, the tympanum being of sufficient area to impart to the surrounding free air, when the tympanum is so vibrated, sound waves substantially corresponding in intensity to the recorded sound waves; substantially as described.

8. In a machine for directly regenerating sound from a record of the same, a ponderous tympanum support having a circular aperture, a light tympanum of long area having its outer edge rigidly mounted upon said support in said aperture, said tympanum having a central conical portion, the base of which exceeds in area one half the effective area of the said tympanum and a mechanical transmission through which the vibrations produced by the record are transmitted to the tympanum, the tympanum being of sufficient area to impart to the surrounding free air, when the tympanum is so vibrated, sound waves substantially corresponding in intensity to the recorded sound waves; substantially as described.

9. In a machine for directly regenerating sound from a record of the same, a ponderous tympanum support having a circular aperture, a light vibratile tympanum exceeding nine inches in diameter, having its outer edge rigidly mounted on said support, said tympanum being shaped to provide an annular rim adjacent said support, and a conical portion springing from the inner edge of said annular rim, a cap of non-vibratile material rigidly secured to the apex of said conical portion of said tympanum, and a mechanical transmission through which the vibrations produced by the record are transmitted to the tympanum, whereby the tympanum imparts to the surrounding free air sound waves substantially corresponding in intensity to the recorded sound waves; substantially as described.

10. In a machine for directly regenerating sound from a record of the same, a ponderous tympanum support having a circular

aperture exceeding nine inches in diameter, a light vibratile tympanum mounted in said aperture and having its outer edge rigidly secured upon said support, said tympanum being shaped to provide an annular rim adjacent said support, and a conical portion springing from the inner edge of said annular rim, the diameter of the base of said conical portion being not less than eight-tenths of the diameter of the said circular aperture in said support, a cap of non-vibratile material rigidly secured to the apex of said conical portion of said tympanum, and a mechanical transmission through which the vibrations produced by the record are transmitted to the tympanum, the tympanum being of sufficient area to impart to the surrounding free air, when the tympanum is so vibrated, sound waves substantially corresponding in intensity to the recorded sound waves; substantially as described.

11. In a machine for directly regenerating sound from a record of the same, a ponderous tympanum support having a circular aperture, a light vibratile tympanum of long area mounted in said aperture, and having its outer edge rigidly secured to said support, said tympanum being shaped to provide an annular rim adjacent said support, the outer diameter of said rim exceeding nine inches, and a conical portion springing from the inner edge of said annular rim, the altitude of said conical portion being substantially one fourth of the diameter of its base, a cap of non-vibratile material rigidly secured to the apex of said conical portion of said tympanum, and a mechanical transmission through which the vibrations produced by the record are transmitted to the tympanum, the tympanum being of sufficient area to impart to the surrounding free air, when the tympanum is so vibrated, sound waves substantially corresponding in intensity to the recorded sound waves; substantially as described.

12. In a machine for directly regenerating sound from a record of the same, a ponderous tympanum support having a circular aperture exceeding nine inches in diameter, a light vibratile tympanum mounted in said aperture, and having its outer edge rigidly secured to said support, said tympanum being shaped to provide an annular rim adjacent said support, and a conical portion springing from the inner edge of said annular rim, the diameter of the base of said conical portion being not less than eight-tenths of the diameter of said circular aperture in said support, and the altitude of said conical portion being substantially one quarter of the diameter of its base, a cap of non-vibratile material rigidly secured to the apex of said conical portion of said tympanum, and a mechanical transmission through which the vibrations produced by the record are transmitted to the tympanum, whereby the tympanum imparts to the surrounding free air sound waves substantially corresponding in intensity to the recorded sound waves; substantially as described.

13. In a sound regenerating machine, a vibration transmission comprising two ponderous members, fulcra carried by said members, an articulate parallelogram of links and levers, the levers of said parallelogram mounted upon said fulcra, pressure exerting means acting between said members and tending through said fulcra to hold said parallelogram under tension, and a style holder carried by one of said levers; substantially as described.

14. In a sound regenerating machine, a vibration transmission comprising two ponderous members, guides for maintaining the relative positions of said members, fulcra carried by said members, an articulate parallelogram of links and levers, the levers of said parallelogram mounted upon said fulcra, pressure exerting means acting between said members and tending through said fulcra to hold said parallelogram under tension, and a style holder carried by one of said levers; substantially as described.

15. In a sound regenerating machine, a vibration transmission comprising two ponderous members, guides for maintaining the relative positions of said members, fulcra carried by said members, an articulate parallelogram of links and levers, the levers of said parallelogram mounted upon said fulcra, pressure exerting means acting between said members and tending through said fulcra to hold said parallelogram under tension, and a style holder carried by one of said levers; substantially as described.

16. In a sound regenerating machine, a vibration transmission comprising two ponderous members, a vertical fulcrum on one of said members, a horizontal fulcrum on the other of said members, an articulate parallelogram of links and levers, the levers of said parallelogram mounted upon said fulcra, and pressure exerting means acting between said members and tending through said fulcra to hold said parallelogram under tension; substantially as described.

17. In a sound regenerating machine, a vibration transmission comprising two ponderous members, fulcra carried by said members, an articulate parallelogram of links and levers, the levers of said parallelogram mounted upon said fulcra, pressure exerting means acting between said members and tending through said fulcra to hold said parallelogram under tension, a style-holder carried by one of said levers, a direct sound regenerating tympanum connected to another of said levers and a pivoted support for said transmission and said tympanum; substantially as described.

18. In a sound regenerating machine, a vibration transmission comprising a support, two ponderous members carried by said support, one of said members being movable upon said support, insulating material between said movable member and said support, fulcra carried by said members, an articulate parallelogram of links and levers, said levers being mounted on said fulcra and pressure exerting means acting between said members and tending through said fulcra to hold said parallelogram under tension; substantially as described.

19. In a direct sound regenerating machine, the combination of a bottomless cabinet having apertures on all sides and a horizontal partition therein, a record holder mounted upon and above said partition, a motor for driving said record holder, a right angled transmission support mounted to swing upon horizontal and vertical axes upon said partition adjacent the periphery of said record holder, one arm of said support adapted to be swung over said record holder, and the other arm of said support extending downwardly through said partition, a vibration transmission mounted within and insulated from said transmission support and comprising two ponderous members carrying fulcra, a parallelogram of links and levers, said levers mounted upon said fulcra, pressure exerting means acting between said members and tending through said fulcra to hold said parallelogram under tension, a style-holder carried by one of said levers at the outer end of said transmission support, a spider mounted upon said transmission support below said partition, a ponderous tympanum support carried by said spider, a direct sound regenerating tympanum mounted upon said ponderous tympanum support, said tympanum being of light vibratile material and having a conical form throughout the greater part of its area and a positive connection between the apex of the conical portion of said tympanum and the inner end of the parallelogram of the said vibration transmission; substantially as described.

20. In a sound regenerating machine, a tympanum, a vibration transmission tensioned in the direction of its vibration independently of the tympanum and connected therewith, and a style holder connected with said transmission.

21. In a sound regenerating machine, an untensioned tympanum, a vibration transmission tensioned in the direction of its vibration and connected with said tympanum, and a style holder connected with said transmission.

22. In a sound regenerating machine, a tympanum, an oscillatory transmission member connected therewith, a style holder for oscillating the transmission member, and means independent of the tympanum for tensioning the transmission member in the direction of its oscillatory movement.

23. In a sound regenerating machine, a tympanum, an oscillatory transmission member connected therewith, a style holder for oscillating said member, and means independent of the tympanum for yieldingly imparting a tension to said member in the direction of its oscillatory movement.

24. In a sound regenerating machine, an untensioned tympanum, a transmission member connected therewith and adapted for oscillation, a style holder for oscillating said member, and means for imparting a tension to said member in the direction of its oscillatory movement.

25. In a sound regenerating machine, a style holder, a tympanum having a rigid vibratory portion, and a tensioned transmission connecting the style holder with said rigid portion, the tension of said transmission being in the direction of its vibration and independent of the tympanum.

26. In a sound regenerating machine, a style, a tympanum, and tensioned transmission means connecting the style and tympanum and having means for imparting vibrations to the tympanum having no greater length than the vibrations of the style, the tension of said transmission being in the direction of its vibrations and independent of the tympanum.

27. In a sound regenerating machine, a tympanum having a vibratile area of sufficient size to effect, without amplification, the regeneration from a record of sound waves of relatively large volume and carrying power, and tensioned vibration transmitting means connected to the tympanum and adapted to be actuated by a style, the tension of the transmission being in the direction of its vibration and not extending to the tympanum.

28. In a sound regenerating machine, a tensioned vibration transmission, a style-holder upon one end of said transmission and an untensioned tympanum connected with the opposite end of said transmission, the tension of the transmission being in the direction of its vibration; substantially as described.

29. In a sound-regenerating machine, a vibratile conical tympanum of large area rigidly supported at its periphery and freely exposed to unconfined air, a sound-vibrated element, and vibration transmission means connecting said element and said tympanum and arranged to impart to the tympanum vibrations which are relatively much shorter than the vibrations imparted to the said element.

30. In a sound-regenerating machine, a vibratile conical tympanum rigidly supported at its periphery and freely exposed to un-

confined air, a sound-vibrated element, and vibration transmission means connecting said element and said tympanum arranged to impart to the tympanum vibrations which are relatively much shorter than the vibrations imparted to the said element; the tympanum having an area sufficiently large to effect, without amplification, sound waves of large volume and carrying power.

31. In a sound-regenerating machine, a vibratile conical tympanum of large area, rigidly supported at its periphery and freely exposed to unconfined air, a sound-vibrated element, and tensioned transmission means connecting said element and said tympanum and arranged to impart to the tympanum vibrations which are relatively much shorter than the vibrations imparted to the record end of the style.

In testimony whereof I affix my signature in presence of two witnesses.

MARCUS C. HOPKINS.

Witnesses:
M. A. BILL,
LEON W. ROSENTHAL.

Copies of this patent may be obtained for five cents each, by addressing the "Commissioner of Patents, Washington, D. C."

Corrections in Letters Patent No. 1,271,527.

It is hereby certified that in Letters Patent No. 1,271,527, granted July 2, 1918, upon the application of Marcus C. Hopkins, of Jersey City New Jersey, for an improvement in "Sound-Regenerat ng Machines," errors appear in the printed specification requiring correction as follows: Page 1, line 25, for the word "magaphone" read *megaphone;* page 5, lines 75 and 95, claims 7 and 8, and page 6, line 25, claim 11, for the word "long" read *large;* and that the said Letters Patent should be read with these corrections therein that the same may conform to the record of the case in the Patent Office.

Signed and sealed this 28th day of September, A. D., 1920.

[SEAL.]

M. H. COULSTON,
Acting Commissioner of Patents.

Cl. 274—16.

1913

CONTENTS:

1. Application ..... papers.
2. Rejection Sept 9, 13
3. Amdt 4th Exp Oath Dec 24/13
4. Rej Feb 7, 1914
5. Amdt. B Feb 6/15
6. Rej Feb 23, 1915
7. Amdt. C Feb 23/10
8. Rej March 4, 1916
9. Amdt. J. Mar. 28/16
10. Letter April 1, 1916.
11. Amdt E Apl. 6/16
12. Renewal Mar. 22/18
13. Amdt F. 3/29/18
14. Lett Apr. 5 1918
15. Letter Per address 4/18/18
16. Amdt G. 4/18/18
17. Notice of Suit Nov. 12-1924
18. Notice of Suit Feb. 18-1925
19. Notice of Suit May 26-1925
20. Notice of Suit Nov. 3-1925
21.
22.
23.
24.
25.
26.
27.
28.
29.
30.
31.
32.
33.
34.
35.
36.
37.
38.
39.
40.
41.
42.
43.
44.
45.
46.
47.
48.
49.
50.

M. C. HOPKINS.

SOUND REGENERATING MACHINE.

APPLICATION FILED JULY 14, 1913. RENEWED MAR. 22, 1918.

1,271,527. Patented July 2, 1918.

5 SHEETS—SHEET 1.

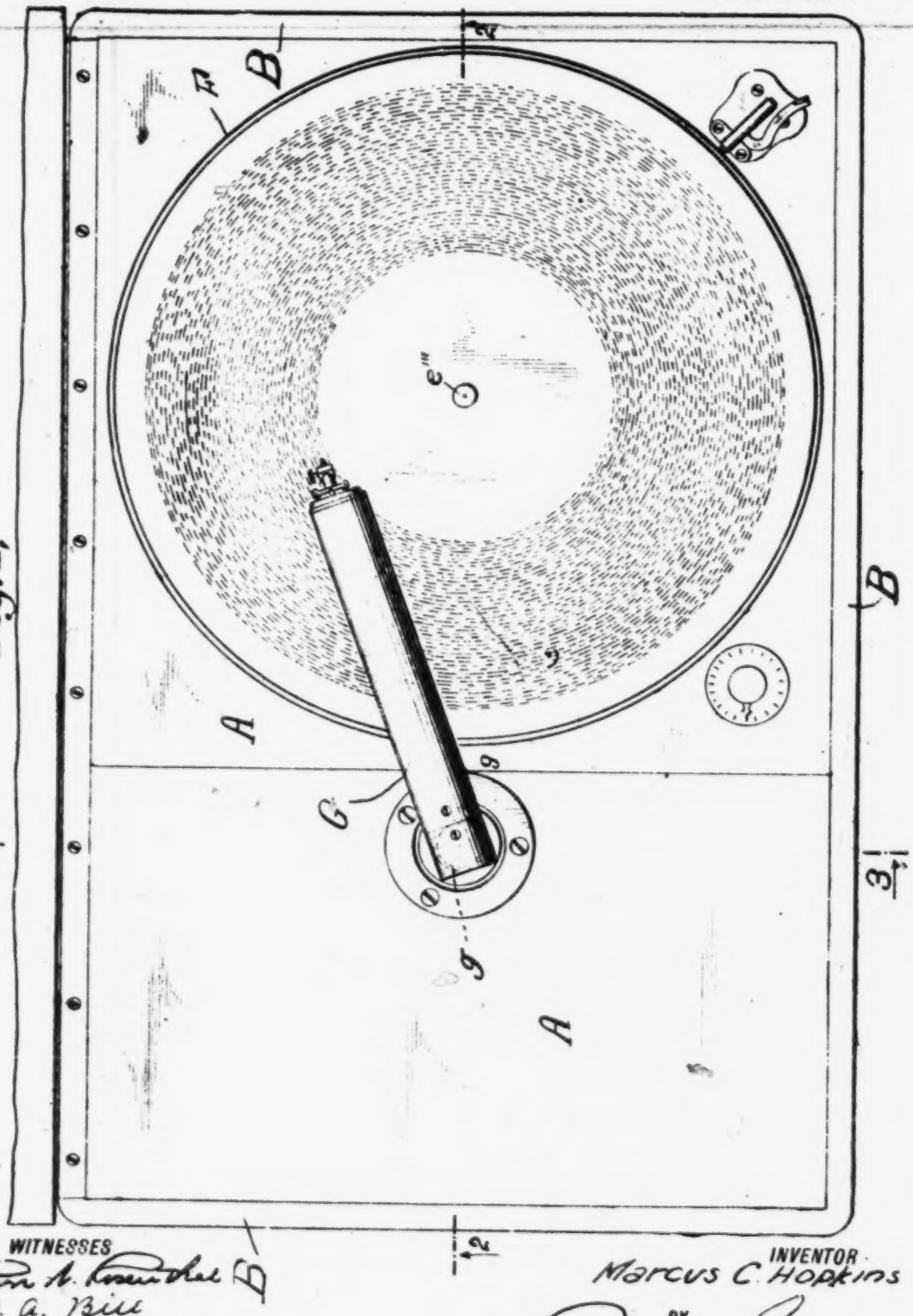

Fig. 1.

WITNESSES

M. A. Bill

INVENTOR

Marcus C. Hopkins

BY

Dennie Davis & Goldsmith

ATTORNEYS

M. C. HOPKINS.

SOUND REGENERATING MACHINE.

APPLICATION FILED JULY 14, 1913. RENEWED MAR. 22, 1918.

1,271,527. Patented July 2, 1918.

5 SHEETS—SHEET 2.

Fig. 2.

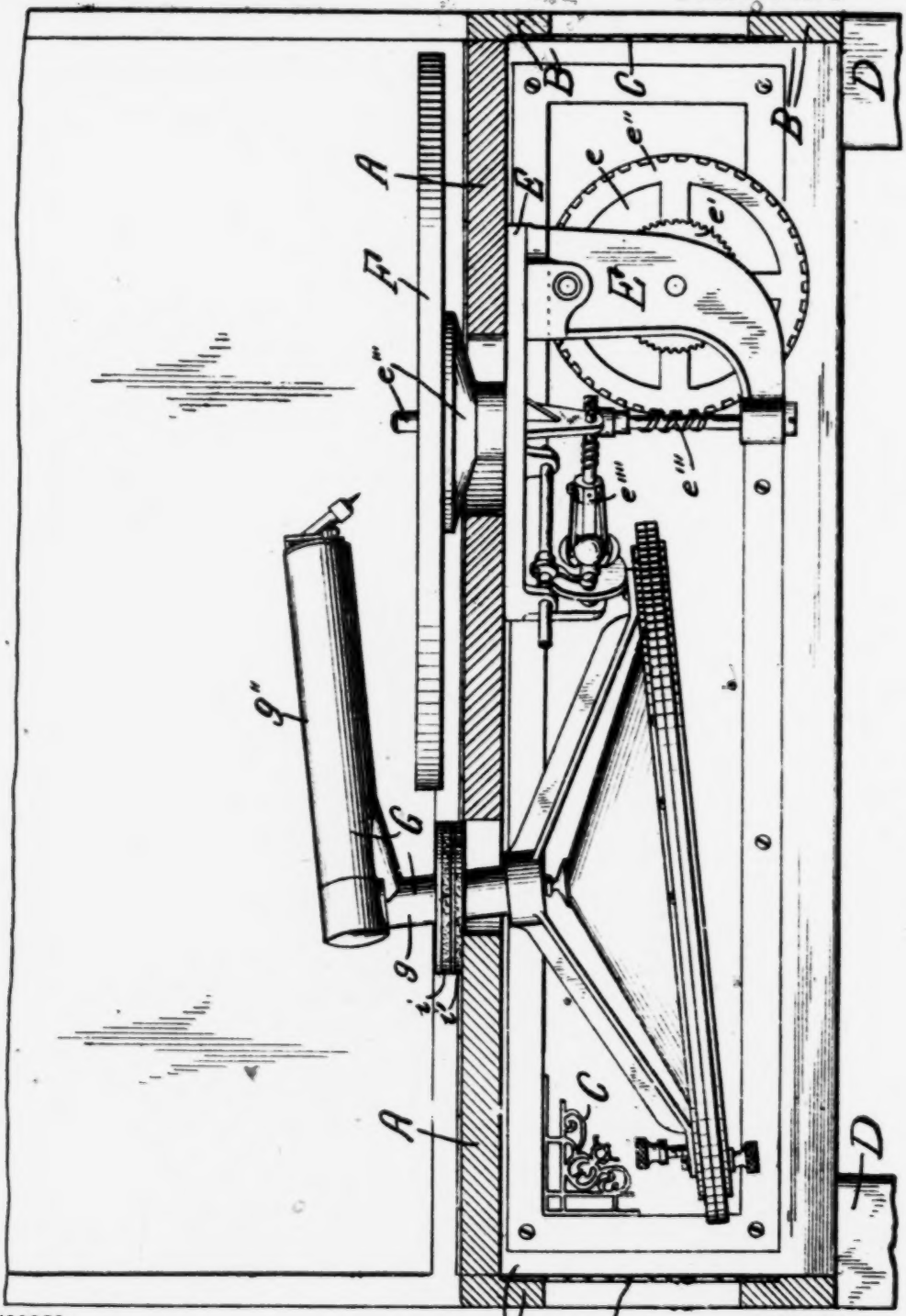

WITNESSES

Leon H. Rosenthal

M. A. Bill

INVENTOR

Marcus C. Hopkins

BY

Pennie Davis & Goldsborough

ATTORNEYS

M. C. HOPKINS.

SOUND REGENERATING MACHINE.

APPLICATION FILED JULY 14, 1913. RENEWED MAR. 22, 1918.

1,271,527. Patented July 2, 1918.

5 SHEETS—SHEET 3.

Fig. 3.

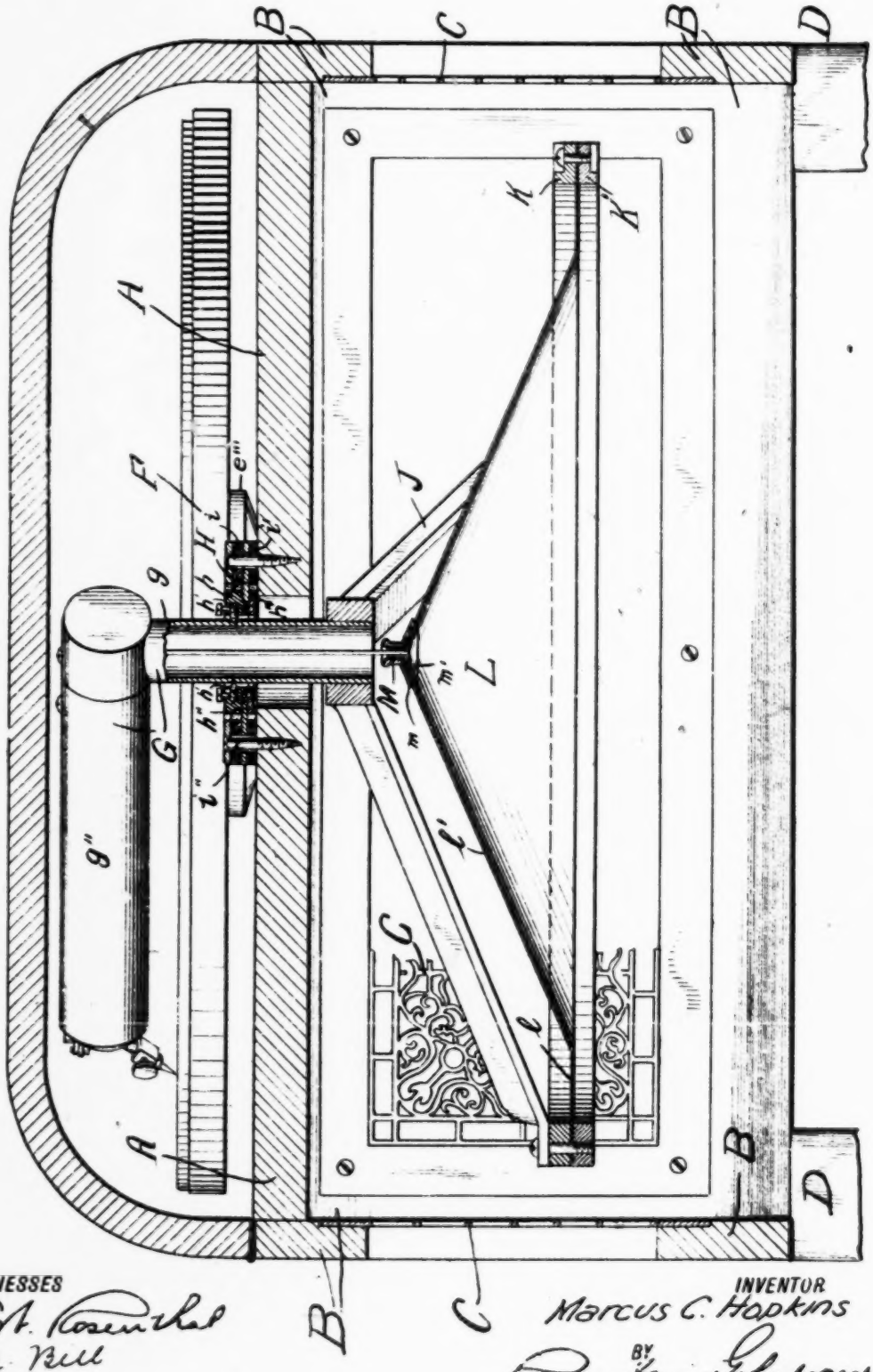

WITNESSES

Leon A. Rosenthal

M. A. Bell

INVENTOR

Marcus C. Hopkins

BY

Pennie Davis & Edmonds

ATTORNEYS

M. C. HOPKINS.

SOUND REGENERATING MACHINE.

APPLICATION FILED JULY 14, 1913. RENEWED MAR. 22, 1918.

1,271,527.

Patented July 2, 1918.

5 SHEETS—SHEET 4.

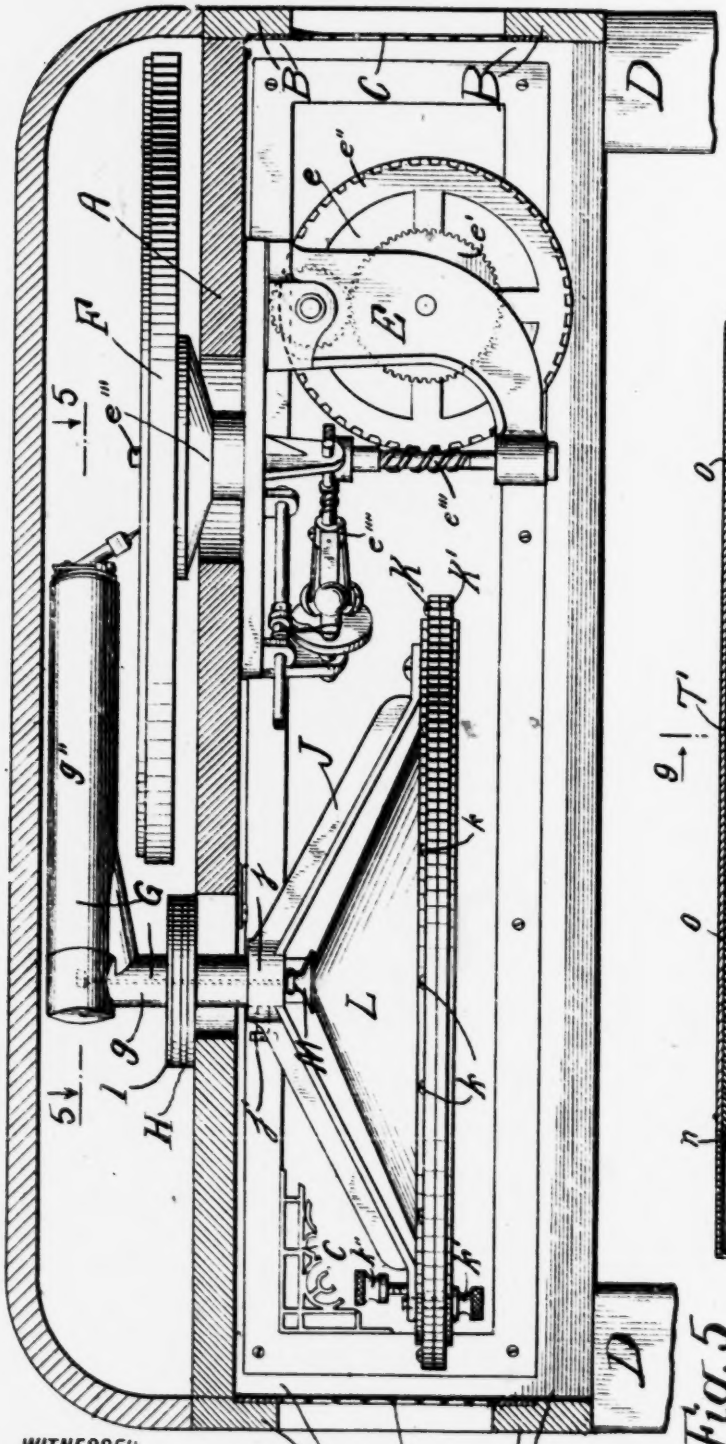

Fig. 4.

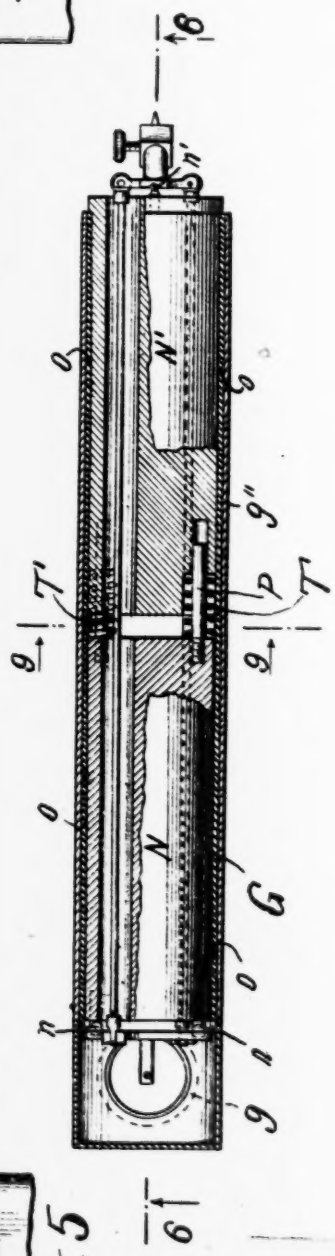

Fig. 5

WITNESSES

Leon A. Rosenthal

M. A. Bell

INVENTOR.

Marcus C. Hopkins

BY

Pennie Davis & Goldstone

ATTORNEYS

M. C. HOPKINS.

SOUND REGENERATING MACHINE.

APPLICATION FILED JULY 14, 1913. RENEWED MAR. 22, 1918.

1,271,527. Patented July 2, 1918.

5 SHEETS—SHEET 5.

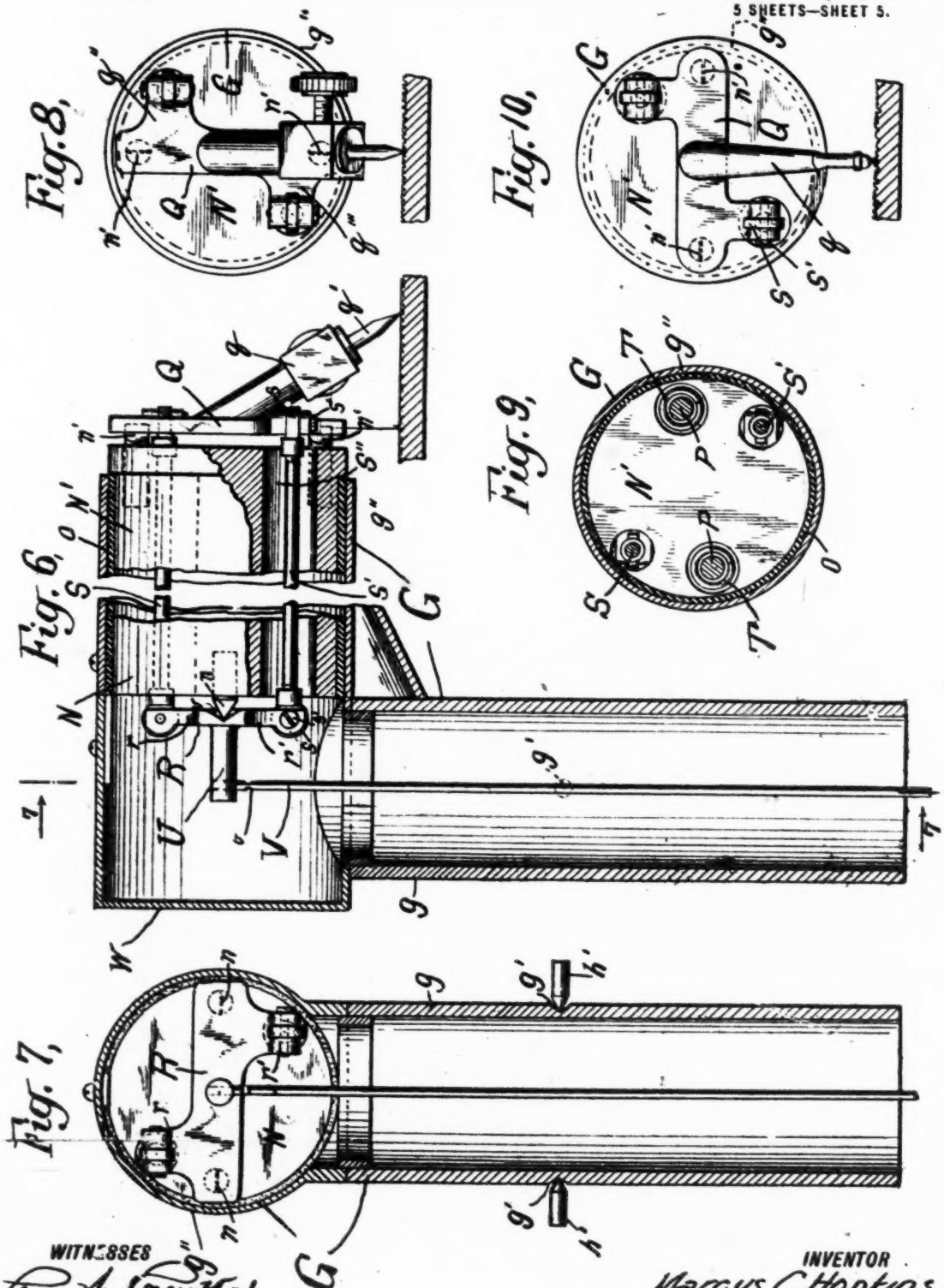

WITNESSES

Leon A. Rosenthal

M. A. Bill

INVENTOR

Marcus C. Hopkins

BY

Pennie Davis & Glastnaugh

ATTORNEYS

Fig. 1,

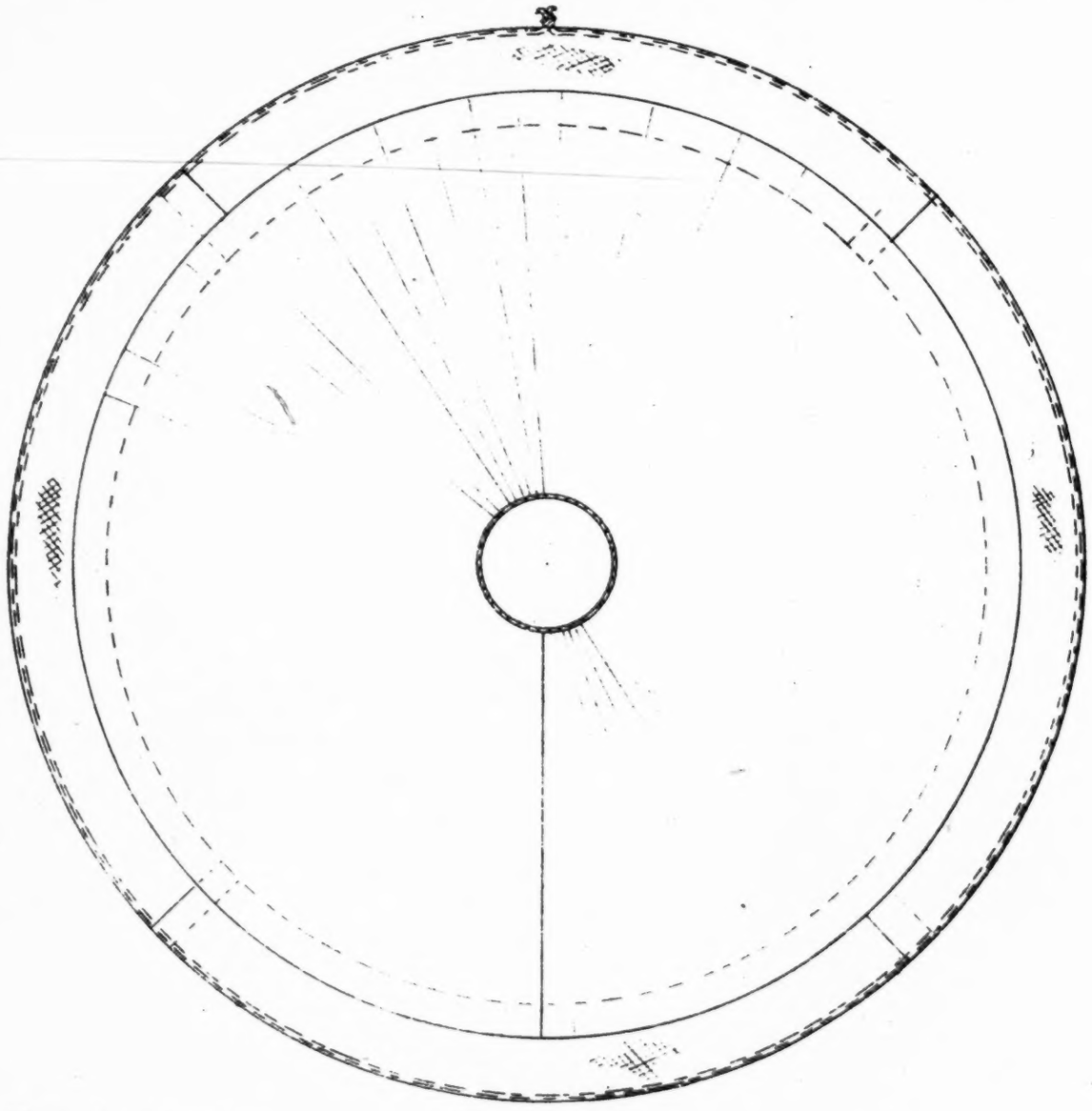

Fig. 3

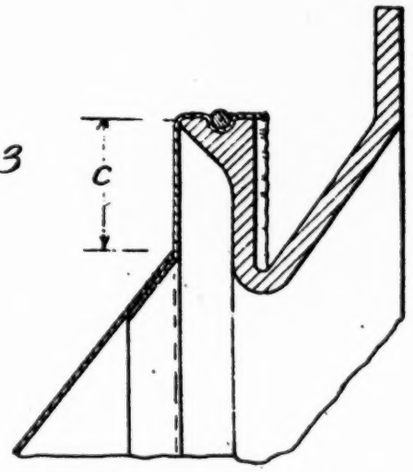

Fig. 2,

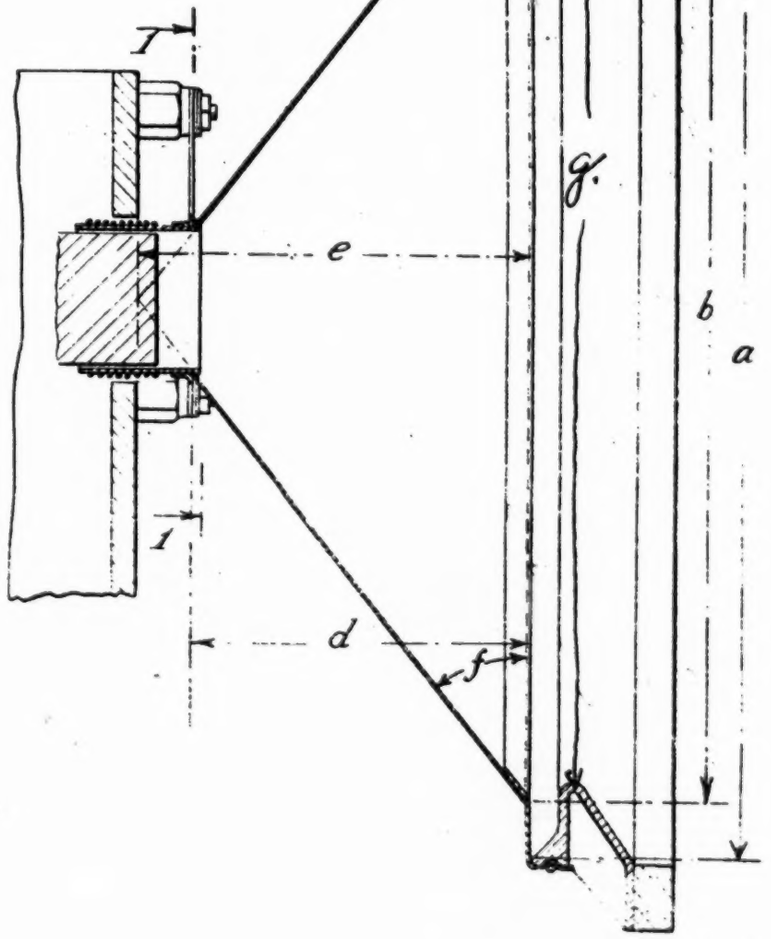

Small Speaker		Large Speaker	
a =	8"	a =	9½"
b =	7"	b =	8½"
c =	½"	c =	½"
d =	2⅜" } variable with atmospheric cond.	d =	3½" } " " " " "
e =	2¾" }	e =	4" }
f =	38°	f =	43°

The angle "f" of a cone whose altitude is one-fourth of diameter of its base is 26 degrees 34 minutes

Arendt Drawing Showing Dimensions of Defendant's Loud Speakers.

Fig. 1,

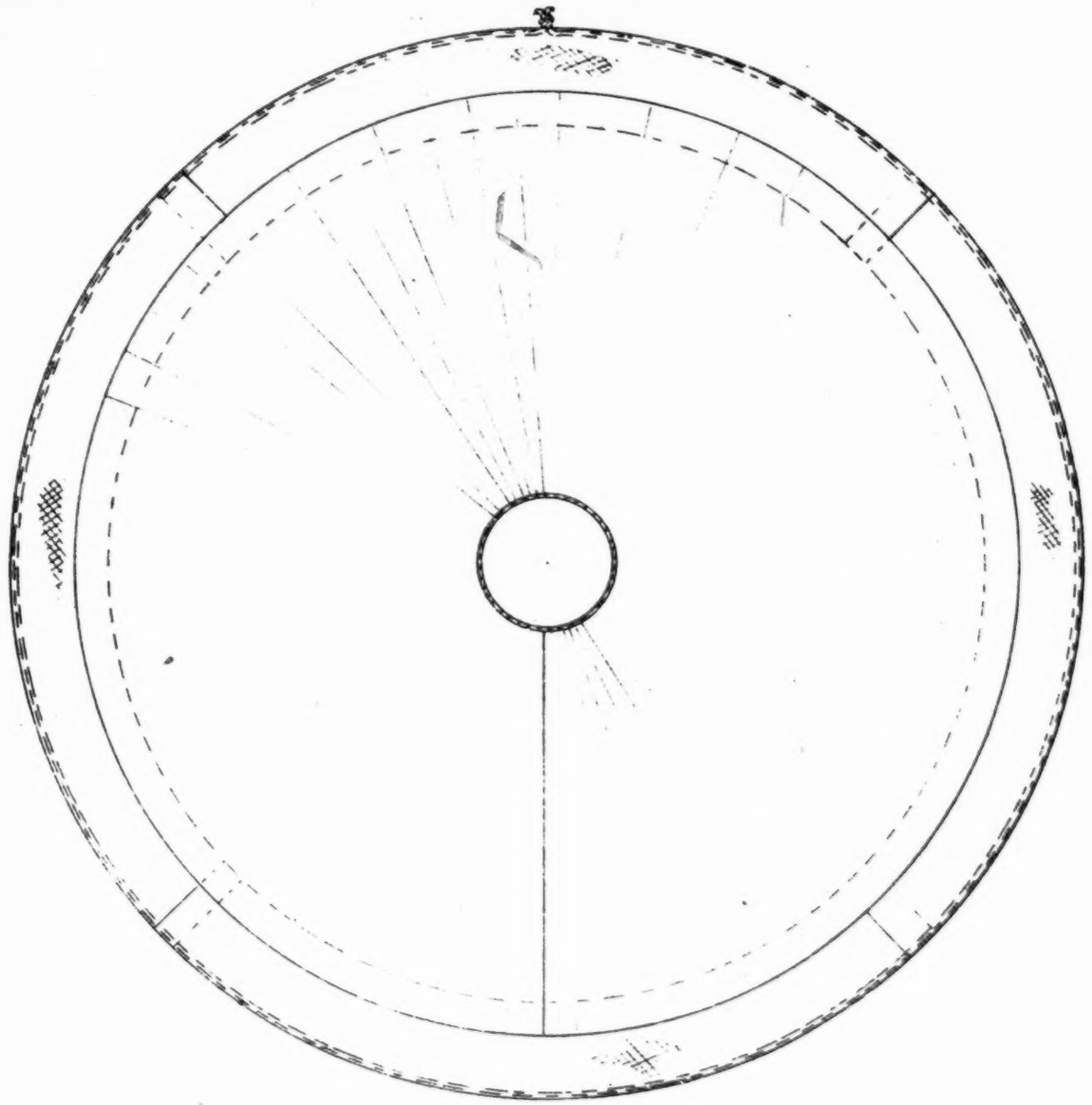

Fig. 3

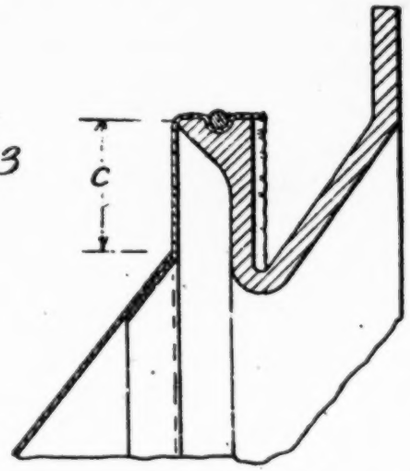

Fig. 2,

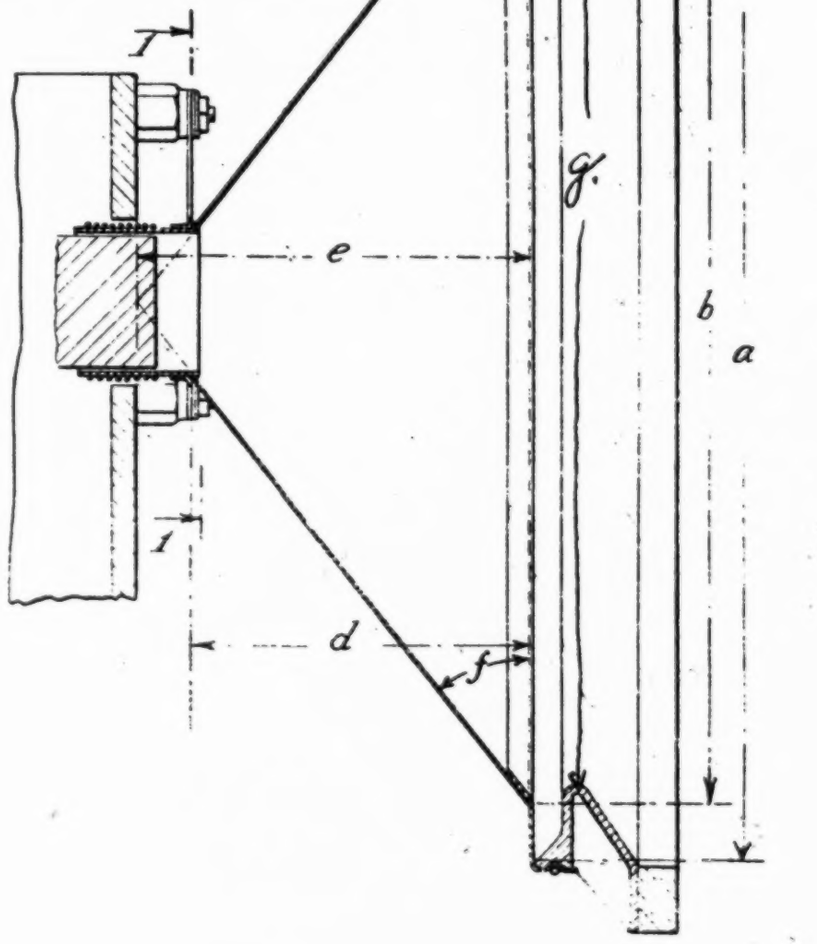

Small Speaker		Large Speaker	
a =	8"	a =	9½"
b =	7"	b =	8½"
c =	½"	c =	½"
d =	2⅜" } variable with atmospheric cond.	d =	3½" } " " " "
e =	2¾" } " " " "	e =	4" } " " " "
f =	38° "	f =	43°
g =	6 25/32 "	g =	8¼"

The angle "f" of a cone whose altitude is one-fourth of diameter of its base is 26 degrees 34 minutes

PROCEEDINGS

of the

RADIO CLUB OF AMERICA

Cone Loud Speakers

A Paper Delivered Before the Radio Club of America on January 27, 1926

By C. L. Farrand

President, Farrand Mfg. Co., Inc.

Volume 3, No. 10 October, 1926

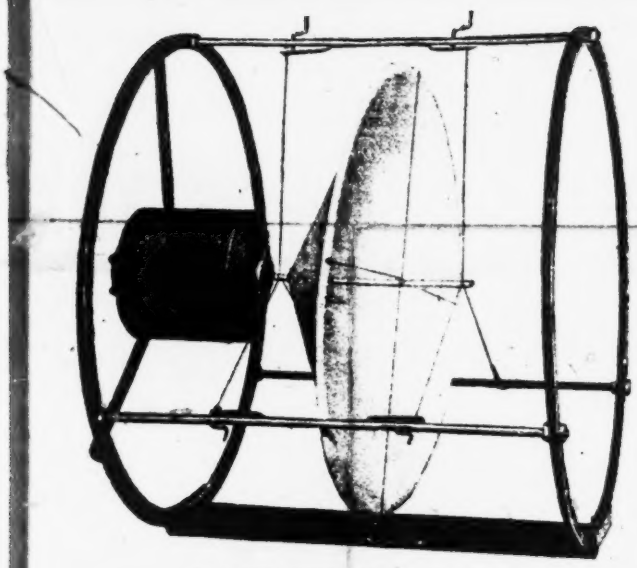

A FREE EDGE CONE DEVICE

In this instance the cone was mounted on a paper straw, and reinforced by silk threads from the straw to its periphery. Bobbin motions as large as one-eighth of an inch were sometimes noticed with this instrument

Cone Loud Speake

A Radio Club of America Paper Whic Tells of the Development of the Con Type Loud Speaker—The Requirements of a Cone to Reproduce Equally the Whole Audio Frequency Range—Where to Look for Distortion When It Occurs

By C. L. FARRAND

President, Farrand Mfg. Co., Inc.

DEVICES used in the process of converting sound into electrical energy cannot always be used for the reverse process—to convert electrical energy into sound, that is. This is especially true in the case of the common carbon microphone. However, the condenser microphone, to cite one concrete example, is a very satisfactory converter of electrical energy into sound, provided the energy is not considerable. If an attempt be made with this device to obtain the same amplitude of sound as the original input (into the transmitter of a broadcasting station, for example), an electrical rupture will occur. This is due to the low efficiency of the device, and to the low insulation resistance made necessary by the very close spacing of the opposite plates of the condenser microphone. The conversion efficiency of these devices is very low, the electrical output being very small.

Certain types of microphones (better styled "pickups") may be reversed, providing the amplitude is already within the working limits.

For the true conversion of sound into electrical energy, or vice versa, three conditions are necessary. First, we must provide a surface in the wave front of the sound wave which will move in accordance with the sound wave; second, adapt this surface to actuate or control an electric or magnetic field; third, arrange the field so it can be utilized for the production of the necessary voice currents.

The construction of the field and its associated circuit presents but a small problem, while the construction of the moving surface and its supports presents many mechanical difficulties. A disc, secured at its edge, as in the form of the present day telephone, has the disadvantages of stresses in the metal permitting the center portion to deflect a relatively large amount while the edge is stationary. This gives rise to mechanical period in the diaphragm itself, which is ultimately imparted to the associated electrical system. In the development of the telephone it became evident that it would be desirous to have the surface of the diaphragm move [illegible]

Cone diaphragms were used in telephones and were sometimes used in connection with horns as loud speakers. The action of the diaphragm of a plunger was to change the volume of the air in the sound box and force a high amplitude sound wave from the orifice into the horn, while the old style diaphragm changed the volume of air in the sound box by flexing. The usual difficulties of sound box resonance were present, and the addition of the horn added certain resonant periods.

THE REQUIREMENTS OF A GOOD HORN

MUCH time and effort have been applied to the development of horn loud speakers for phonograph and radio purposes. Horns of small size have been made which cover only a small portion of the frequency range. A horn, to reproduce music successfully, should cover a frequency range of 50 cycles to 6000 or 8000 cycles. This can be partially accomplished by a horn of large size, *i. e.*, 6 or 8 feet in diameter and of about the same length. Horns of smaller size generally cover the upper range or the middle range, and depend upon internal resonance to develop the lower notes.

In order to approximate a reasonable range, several horns can sometimes be used in combination. One horn would be designed for the upper range while one or two horns would be designed to cover the middle and lower ranges. The results obtained from devices of this kind have been only partially satisfactory, as a great many resonant periods occur, which tend to accentuate or blur certain tones.

The conical diaphragm, when used in telephone sound boxes, presented different problems than when it was freely exposed to the surrounding air. Hopkins made a large step in this direction by evolving a practical conical diaphragm of sufficient size to produce a sound wave of magnitude comparable to the original sound, without the use of a horn. This was successfully used with a phonograph. Large diaphragms of this character will produce a sound wave of magnitude of a normal speaking voice with a small amplitude of motion. To produce the same magnitude of sound with a small diaphragm and horn, requires a much larger amplitude of motion and higher [illegible]

mately the same amplitude as the wave prod by the large diaphragm.

The author, while searching for a suit loud speaker in connection with talking pic work and wireless telephone systems, and w ing to avoid the distortion of the horn, happe upon the Hopkins conical diaphragm, and c bined it with suitable actuating electrical phone mechanisms. The advantages of a phragm of this type for use as a loud spe were investigated and developed. A co diaphragm can be constructed so that it m substantially as a plunger at sound freque By so moving, it acts upon a large area volume of air, and produces a high power wave of large amplitude, with slight motio

It may be generally stated that the cone m as a plunger at sound frequency. This, howe is not exactly the case. A cone of a given will move as a plunger only if the frequen sufficiently low. As the frequency is increa the outer portion of the cone will tend to re stationary, and, at extremely high freque only the inner portion of the cone will m If a cone is built several feet in diameter center portion of the cone will act at the hi frequencies, around 3000 to 5000 cycles, w as the frequency is lowered, the active ar the cone will progressively increase. Thi at the lower tones, a larger portion of the will function. It was noticed in the use of l cones that there was a greater tendency t produce the lower frequencies, or bass notes it seemed that there was a relation betwee diameter of the cone and the length of the w It is not unreasonable to expect that a 10 sound wave can be better produced by a pla which approximates that diameter than by only a small fraction of that size. Such a phragm may be likened to an antenna, and as a radiator. With suitable proportion, it approach an aperiodic radiator. By redu the mass of the diaphragm and the elasticit the suspension, and disassociating it from t mechanical portions of the system, it will proach the true conditions of aperiodicity. is essential that the associated telephone m ment does not upset this condition by ha undue mass or elasticity. The mass and e ticity should be so proportioned that they do appreciably reduce the natural damping of diaphragm. A diaphragm of this character an extremely large resistance to motion, w is due to the actual production of sound a

the conical shape gives extreme rigidity to [illegible]

duced, that is, for efficient radiation, it is desirable to have an antenna length which is an appreciable fraction of the maximum wavelength to be radiated from the antenna system.

THE MOVING COIL SYSTEM

THE moving coil telephone is ideal for the purpose of producing a highly damped ·or, as the mass of the coil can be made very low, and the elasticity is only that of the diaphragm, which is extremely small.

The next in choice is the balanced armature telephone. The latter generally requires a reduction lever to reduce the amplitude motion of the armature to a lower motion for application to the apex of the conical diaphragm. A reduction ratio between 0.8 and 0.4 to 1.0 is generally satisfactory.

The moving coil system, with a large conical diaphragm, was developed commercially by the author in the form of the Phonetron of 1921, and used for both loud speaker and pickup purposes.

Fig. 3 is a photograph of one of the original Phonetrons, while Fig. 1 shows its constructional details. The conical diaphragm was supported at its edge by two clamping rings. To these two clamping rings, and located on the axis of the cone, was secured an electro-magnet, by means of a spider-like support. The electro-magnet was pot-like in shape, made of cast iron or steel with a central core of Norway iron, and provided with a field winding of No. 18 B. & S. wire (suitable for 6-volt operation), and thus produced a uni-directional annular field. A cylindrical bobbin of hard rubber was supported from the apex of the cone so as to move freely in the annular field without touching the metal portions of the magnet. This bobbin was wound with 0.002-inch diameter enameled wire, about 4500 turns, for use directly in the plate circuit of a vacuum tube. Fewer turns, together with a transformer, were sometimes used. The apex of the cone was stiffened by means of thin conical metal reinforcements. When used as a pickup, the construction was similar. The Phonetron pickups were installed in the original WJZ station in Newark, New Jersey, and were used there during the spring of 1922 with excellent results. Unfortunately the receiving equipment at that time did not permit the broadcast listener to appreciate the quality of transmission. A receiver utilizing a practically distortionless amplifier and Phonetron loud speaker was installed in the office of John V. L. Hogan in New York City. Tests were made between this receiving station and WJZ of Newark, and various comparisons of pickups and loud speakers were made. The amplifier used in connection with this early work was a resistance-coupled audio-frequency amplifier wherein only the alternating potential of the plate is supplied to the succeeding grid by means of a balancing battery, which balances the d. c. potential of the plate. This circuit is shown in Fig. 2. This amplifier, I believe, is due to Arnold of the Western Electric Company. It is very satisfactory for experimental purposes where it is desired to have distortionless amplification of all sound frequencies. Four resistance-coupled stages will give an amplification equivalent to about two stages of efficient transformer coupling. The new Radio Corporation and Cunningham power tubes, UX and CX 112, are satisfactory for this type amplifier. The purpose of making the resistance of the first stages larger is to decrease the operating voltage on the tube and to permit a smaller balancing battery which balances the operating voltage of the tube to be used. An amplifier of this kind will amplify from zero cycles to 25,000 cycles without distortion, there being no reactance, either capacitative or inductive, to introduce a frequency function. Figs. 4 and 6 are photographs of a battery balanced amplifier of this type built for laboratory purposes.

CHOOSING PAPER FOR A CONE

IN THE development of the cone loud speaker, many different types of construction were tried. Various materials, including hard rubber, celluloid, wood, metals, paper, etc., were tried for the cone. A fibrous paper, not highly calendered, operates satisfactorily, and presents a good commercial solution. The thickness of the paper should be approximately one mil (.001") for each inch of diameter, providing a soft finish paper is used; the thickness should be less if the paper is hard finish. The harder the finish of the paper, the greater will be found the tendency to depart from the cone shape, and undue stress will be set up in the paper, which will give rise to rattles, due to "tin-can" actions. The proportion of the altitude of the cone to its base can be gauged by the angle of the side of the cone to its axis. This should range between 30 degrees and 60 degrees. These values are approximate, and depend upon the size of the cone, and may be deviated from without affecting operation to any large extent.

The freedom of movement, of course, is hindered somewhat by the flexing of the paper at the edge. This flexing involves a loss of power which can be compared to hysteretic losses. Experiments were conducted to determine the amount of these losses and to lessen them. Sandpapering an annular portion at the edge of the cone, or substituting light flexible paper or other material, and castellating the paper edge, were tried. Where heavy paper was used, the above experiments improved the results, and were manifested by an increased clarity of treble. Complete freedom of the edge was obtained by suspension of the cone on silk thread. The photograph at the top of page 514 is of the free cone device. The cone was mounted on a paper straw, and reinforced by silk threads from the straw to its periphery. On one end of the straw was mounted a bobbin which floated in the annular field produced by the electro-magnet. The complete assembly was supported by threads. There was nothing to retard the axial motion of the bobbin; it floated freely in the sound wave, and motions as large as $\frac{1}{8}$th of an inch were sometimes noticed when used.

As this was done, it was found that the edge of the cone, due to the slowness of curvature, was not inclined to move integrally with the rest of the cone. This was overcome by making a circular trough-like portion at the edge, which reinforced it, and retained the circular form of the cone. A method nearly as effective is to reverse a small portion of the cone at the edge, making a V shape trough instead of the circular trough. The advantages of freeing the edge of the cone are so slight that operation can be equaled by suitable proportion, while the mechanical advantage of a supporting ring at the edge of the paper are apparent. The outer portion of the cone can be conveniently turned inward and the mass of the supporting rings and its supports materially reduced without affecting its operation.

Fig. 5 shows a photograph of a large cone speaker built in experimental form. The mechanism is substantially the same as that of the Phonetron, shown in Fig. 1, and consists of a floating coil supported from the apex of the cone and which floats in the annular, uni-directional magnetic field. The cone of this model was about four feet in diameter, and was made of pieces of wood cemented together. The

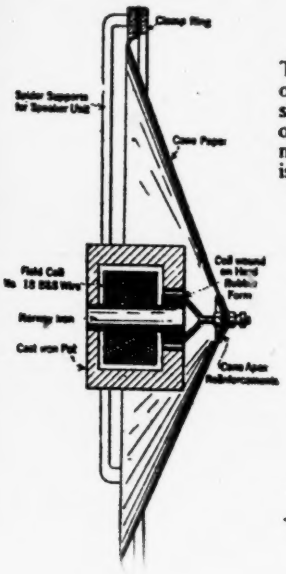

FIG. 1
The construction of the Phonetron, shown at the other lower corner of this page, is made clear by this diagram

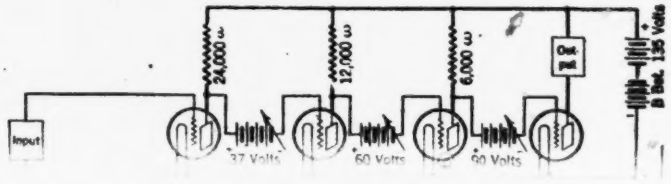

FIG. 3
In 1921, a moving coil system, with a large conical diaphragm, was developed. It was known as the Phonetron

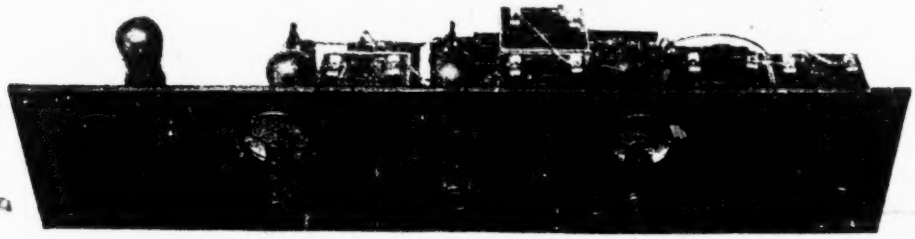

FIG. 4

A battery balanced amplifier as used in the experiments between New York and WJZ of Newark in 1922. It is a resistance-coupled affair wherein only the alternating potential of the plate is supplied to the succeeding grid by means of a balancing battery, which balances the d.c. potential of the plate

periphery of the cone was cemented to a ring of canvas which in turn was cemented to a square plywood board. The action of this device, as in the case of the Phonetron cone speaker, is as follows: The armature coil is drawn inward toward the field magnet when the voice current is in one direction, and forced outward from the magnet when the voice current reverses to the opposite direction. In this way, the force is applied between the apex of the cone and the heavy magnet pot without a system of mechanical levers.

The loud speaker, being the device which produces the sound, is generally blamed for all the deficiences of the receiving system, including those due to poor receiver, vacuum tubes, batteries, and at times, even the deficiencies of the broadcasting.

The better grade of receiver of to-day contains good audio transformers and is capable of producing good quality music with sufficient bass. It is, however, necessary that the batteries have voltage to supply sufficient power to the vacuum tubes. It is also necessary that the vacuum tubes have sufficient power capacity, *i. e.*, sufficient filament emission and normal filament brilliancy. The type UV-201-A and C-301-A tubes, when new and used with a 90-volt B battery, have sufficient emission and, therefore, power capacity, to permit faithful reproduction at only very moderate intensity. However, when the volume is increased with this combination, an accentuation of harmonics occurs, which are evidenced in a faithful speaker by nasal or rattling tones. An unfaithful reproducer will, however,

FIG. 5

A large cone speaker built in experimental form. Its mechanism is not unlike that of the Phonetron shown on the previous page. The cone of this model was about four feet in diameter

smooth these "rough edges" of the sound and give a more pleasing tone; this deceives the listener into believing that the more faithful speaker is faulty, whereas the facts are that the speaker is faithfully reproducing the voice which has been distorted by the vacuum tubes. This condition can be improved by an increase of plate voltage, which will lower the impedance of the tube and affect a greater transfer of the lower frequencies (when used with a transformer of given inductance), and will also permit the increased amplitude of the lower tones to be passed without distortion.

Super-heterodynes and sets of tuned radio frequency type utilizing regeneration have a tendency to change the tonal characteristics of the music or speech, when tuned. R ceiver is tuned to the maximum volume, an a centuation of the bass will be observed. Th may cause all tones to become somewhat drum like in nature with, at times, a complete loss o the treble. The tuning of a receiver should no change the tonal characteristics of the reception excepting that there is, however, a tendency o the human ear to respond more readily to louder sounds. In practically all radio reception of to-day, the magnitude of the treble is greater than the bass. This must not, however, be confused with the accentuation of bass due to regeneration as referred to above, when a partial or complete loss of treble occurs at the tuning point of maximum volume. A good receiver and speaker will reproduce throughout its tuning range the true relative value of bass and treble, the reduced bass on either side of the peak tuning point being due to the failure of the ear to notice the bass until it is sufficiently loud. The intensity of treble will not lessen at the tuning point of maximum volume, but the bass will sound louder.

FIG. 6

Below is shown another view of the balanced amplifier shown at the top of this page, and schematically in Fig. 2

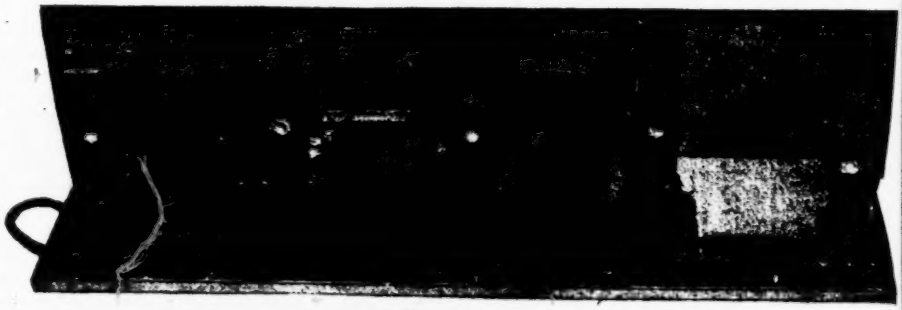

A FRENCH AMATEUR SHORT WAVE STATION

Owned by *La T. S. F. Moderne*, a Parisian radio magazine. Its call is 8AE and when this station was erected, was using 1764-1499 kc. (180-200 meters). This view shows the antenna and counterpoise

FIG. 1
WAVES IN CONE DIAPHRAGM

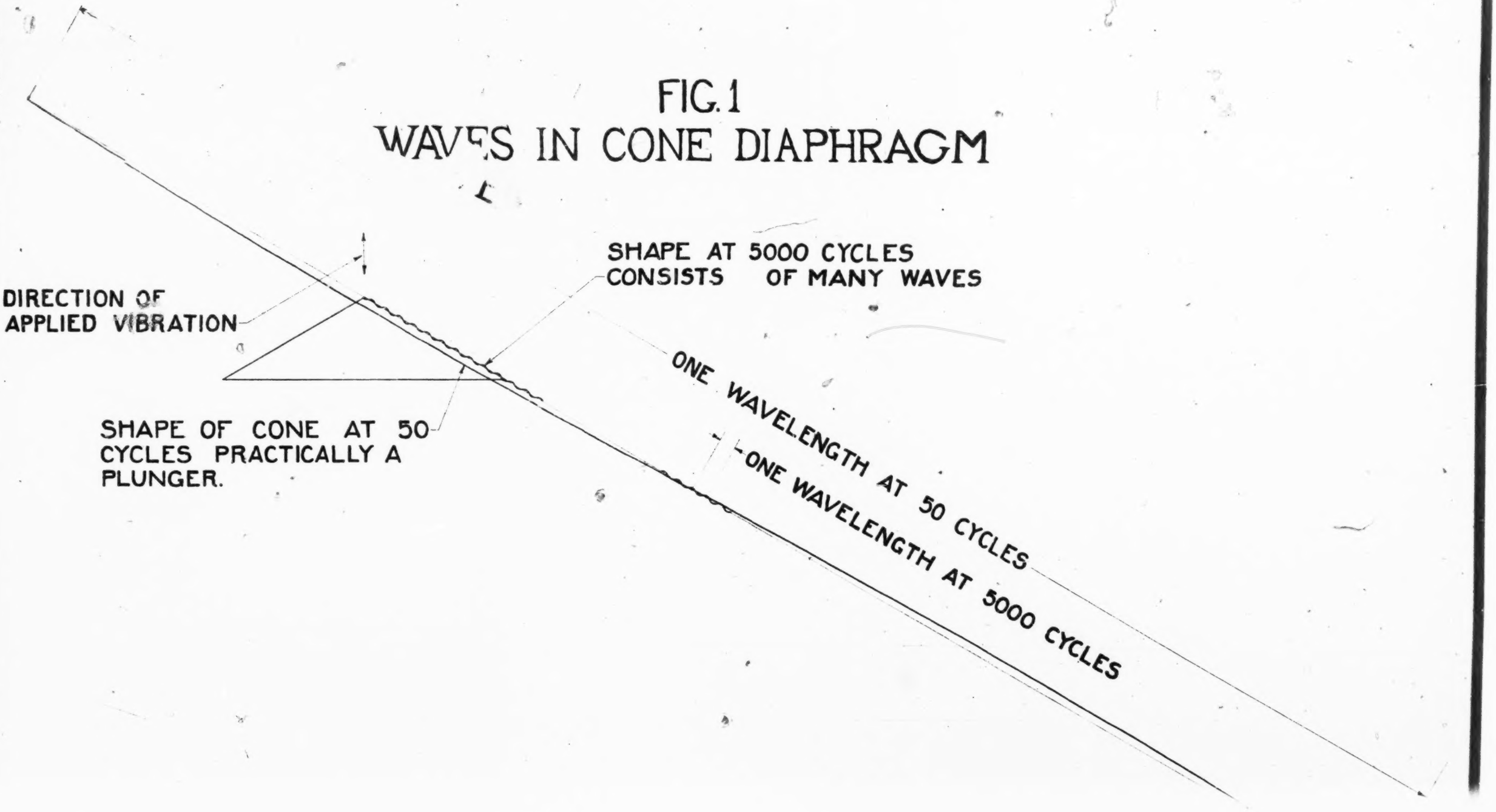

CHLADNI FIGURES

AT PLATE

FIG. 2A

EFUL WAVE

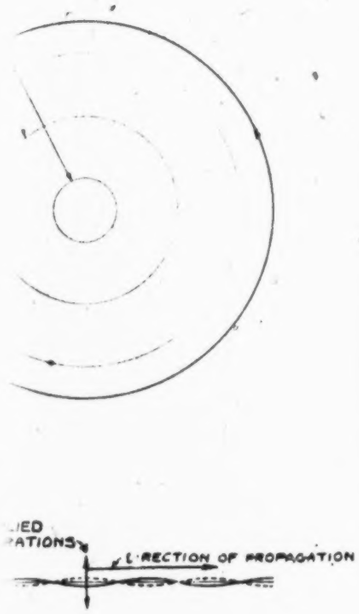

FIG. 2B

ASITIC WAVE

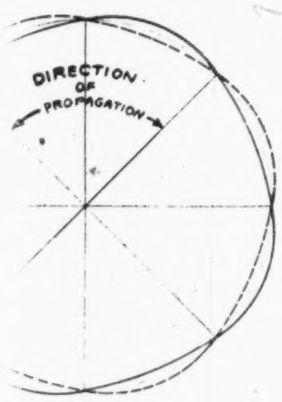

FIG. 2C

POSITE OF USEFUL AND PARASITIC WAVE

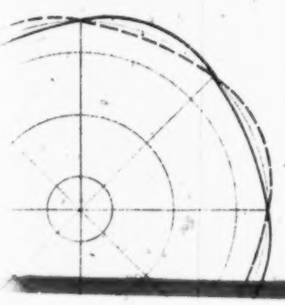

FREE EDGE CONE

FIG. 3A

USEFUL WAVE

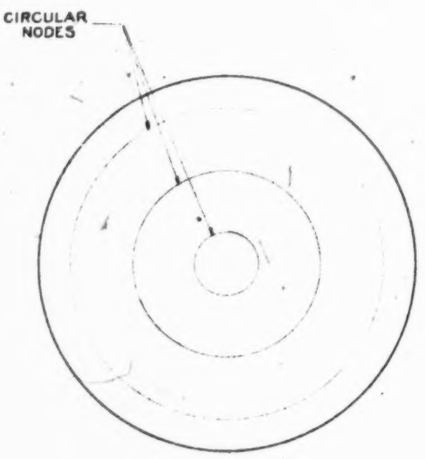

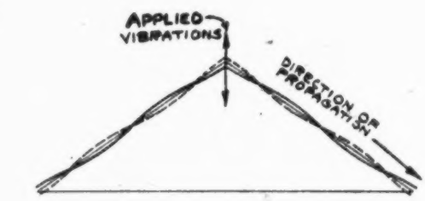

FIG. 3B

PARASITIC WAVE

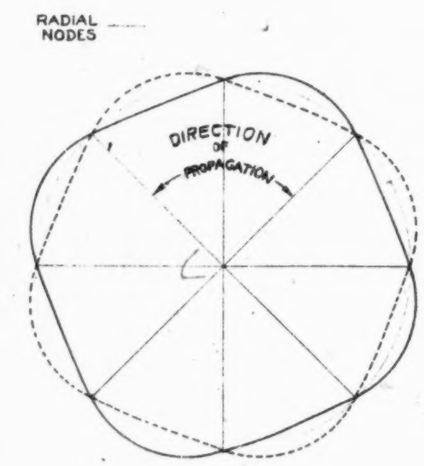

FIG. 3C

COMPOSITE OF USEFUL WAVE AND PARASITIC WAVE

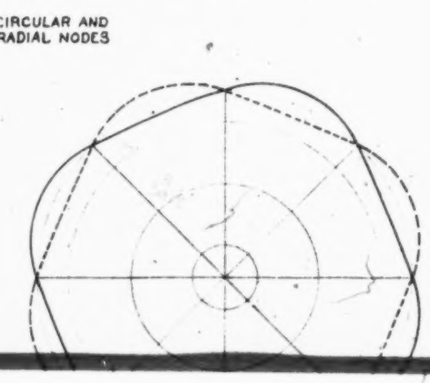

HOPKINS CONE

FIG. 4A

USEFUL WAVE

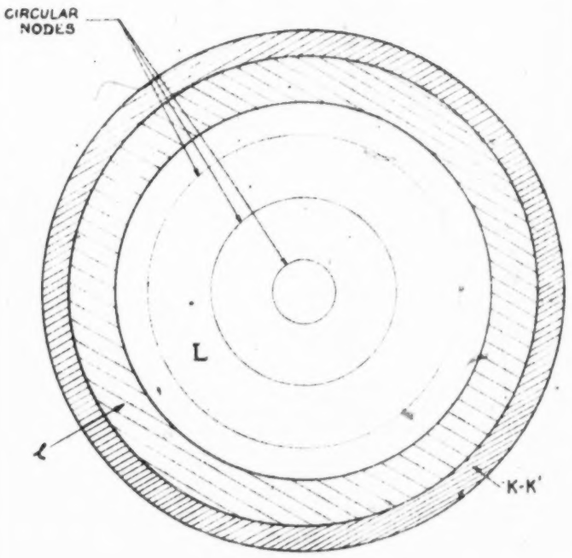

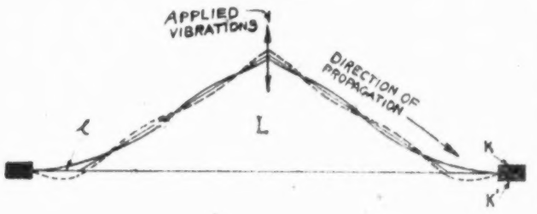

FIG. 4B

PARASITIC WAVE RESTRICTED

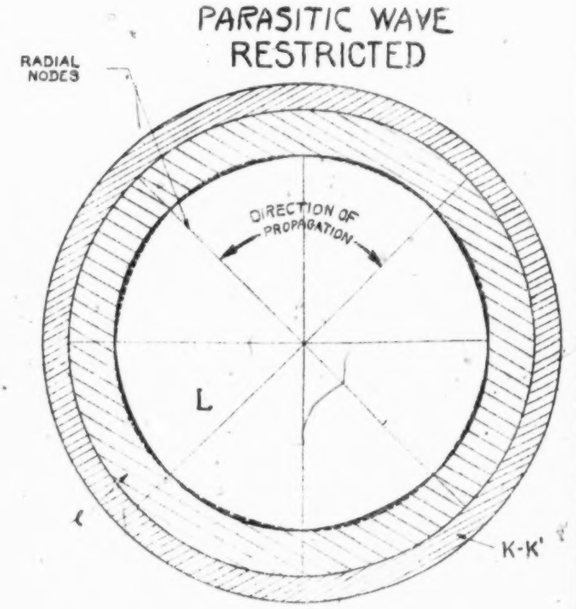

FIG. 4C

COMPOSITE OF USEFUL WAVE WITH PARASITIC WAVE RESTRICTED

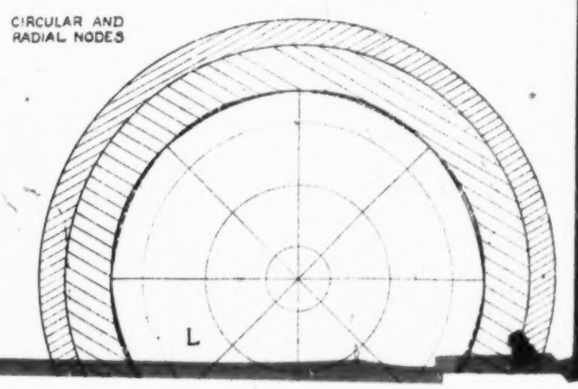

FIG. 2A

USEFUL WAVE

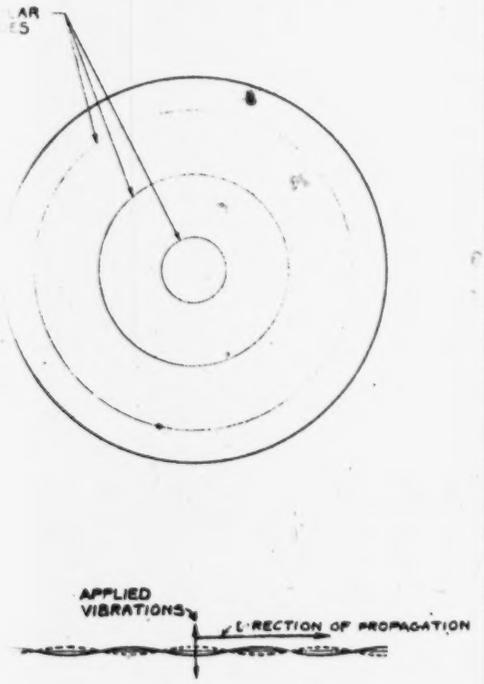

FIG. 2B

PARASITIC WAVE

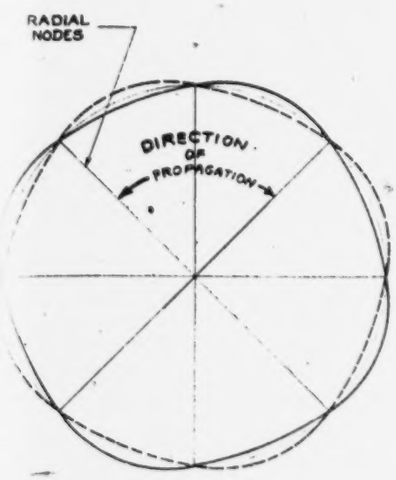

FIG. 2C

COMPOSITE OF USEFUL WAVE AND PARASITIC WAVE

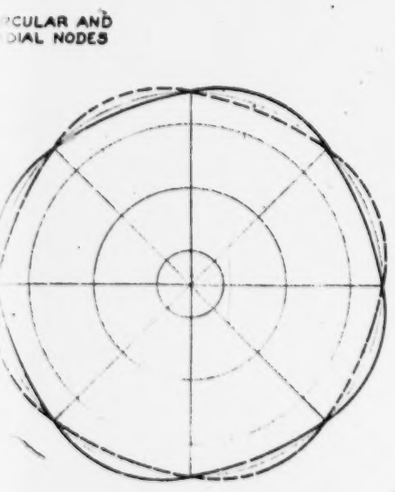

FIG. 3A

USEFUL WAVE

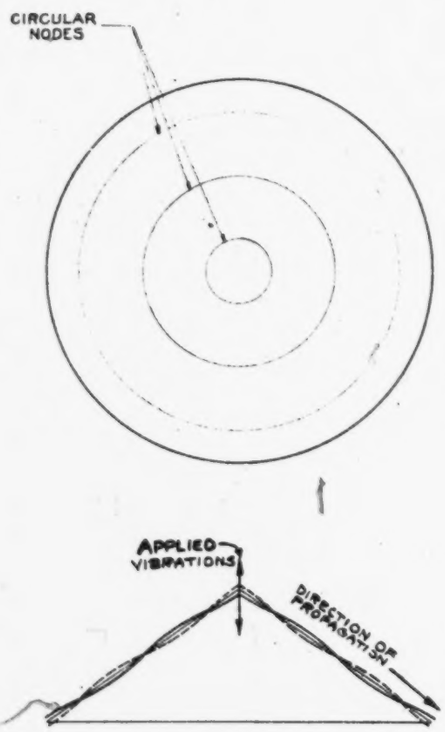

FIG. 3B

PARASITIC WAVE

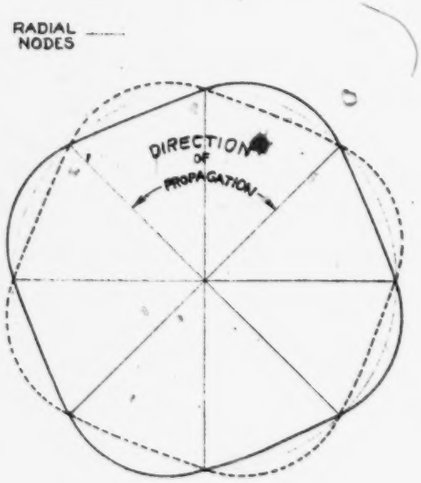

FIG. 3C

COMPOSITE OF USEFUL WAVE AND PARASITIC WAVE

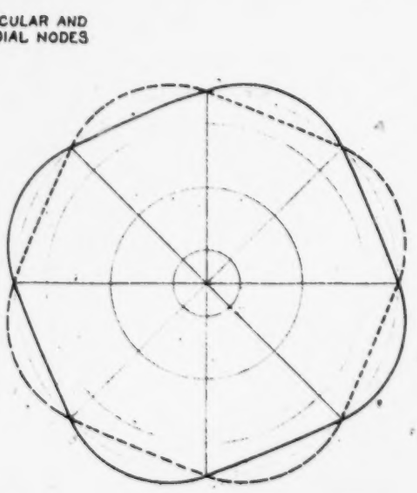

FIG. 4A

USEFUL WAVE

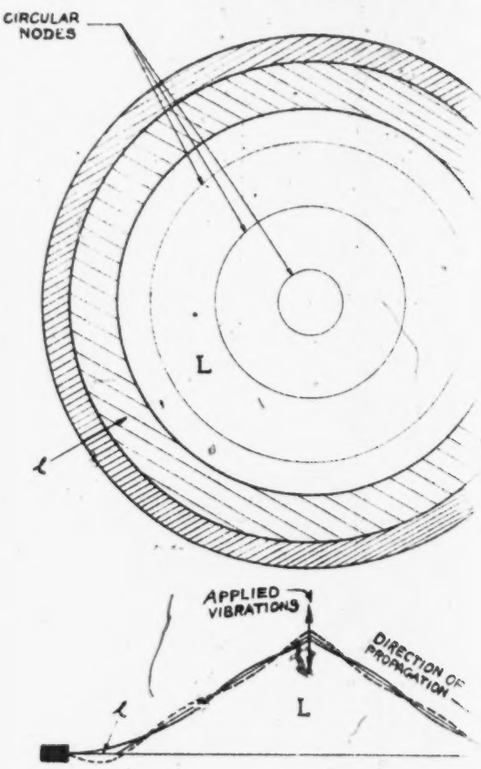

FIG. 4B

PARASITIC WAVE RESTRICTED

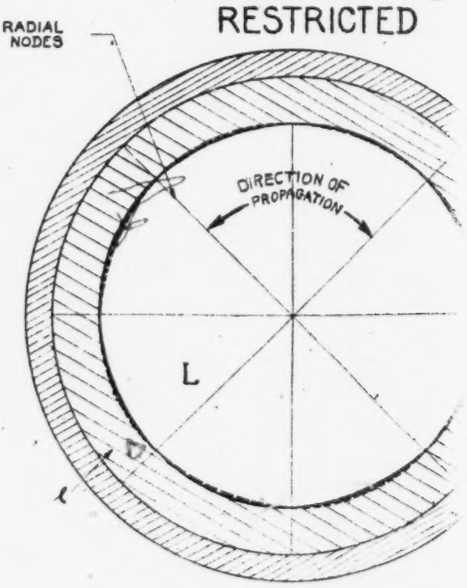

FIG. 4C

COMPOSITE OF USEFUL W/ WITH PARASITIC WAVE REST

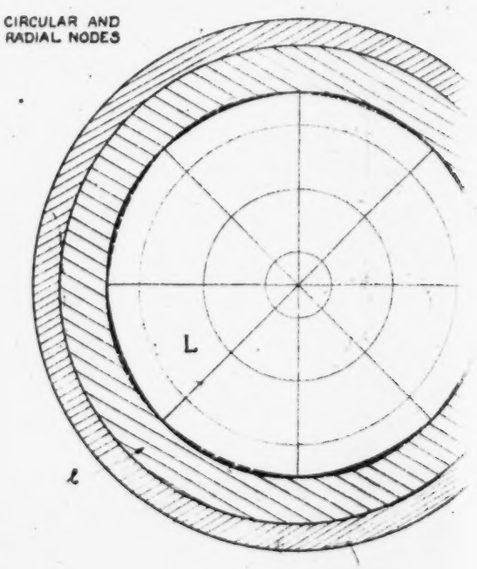

Methods of High Quality Recording and Reproducing of Music and Speech based on Telephone Research

BY J. P. MAXFIELD[1] and H. C. HARRISON[1]
Member, A. I. E. E. Associate Member, A. I. E. E.

Synopsis.—The paper deals with an analysis of the general requirements of recording and reproducing sound, with the nature of the inherent limitations where mechanical records are used, and a detailed description of a solution involving, first, the use of electrical equipment for the purposes of recording and, second, the use of mechanical equipment based on electric transmission methods for reproducing.

Probably the most useful feature of the paper is the complete description of the application of electrical transmission theory to mechanical transmission systems. A detailed analysis is made of the analogies between the electrical and the mechanical systems.

Introduction

THE problem with which this paper is concerned, in its broadest sense, may be stated as that of taking sound from the air, storing it in some permanent way and reproducing it again without appreciable distortion. It is immaterial from the general standpoint whether the means used are mechanical or electrical or a combination of the two. The choice of which method to use will depend largely upon the commercial requirements accompanying the specific purpose for which the reproduction is being made. For instance, it is quite probable that the means chosen for reproduction in residences would differ materially from those used in large ballrooms or in the presentation of synchronized motion pictures.

Before considering the methods and results referred to in the title of this paper, it may be well to make a rough division of the problem. The storing or recording of sound requires, first, a mechanical system which will respond faithfully to the sound waves which are to be recorded. Then, there is required some material in or on which this sound may be recorded and an intervening system which permits the sound waves to make the record in this material. In the usual case, and in that with which we are particularly concerned here, there is a mechanical system which will vibrate in response to the sound which is to be recorded and

1. Both members of the technical staff, Bell Telephone Laboratories.

Abridgment of a paper presented at the Midwinter Convention at the A. I. E. E., New York, N. Y., February 8-11, 1926. Complete copies available upon request.

directly through some mechanical linkage or less directly through an electrical linkage, drive a cutting mechanism which will impress a wax record.

The first consideration, therefore, is the character of the sound which is to be recorded including all of the effects of reverberation and the general questions of studio design. Next to be considered is the manner in which the cutting instrument shall impress this speech or musical record upon the constantly rotating wax disk, which disk is commonly called the wax master. In this connection, there will be discussed also the relative value of the electrical and mechanical linking of the cutting knife with the mechanism which receives the sound waves. Following the discussion of these problems and a brief reference to the state of the prior art, there remains to be considered the reproduction of the sound which is stored in the cuts or grooves of the wax record.

In the case of reproduction also, there is required a mechanical system which will respond to these cuts in the wax and a system which will set up in the air-sound waves essentially identical to those picked up by the first mechanism of the recording system. Between these two systems, a mechanical linkage intervenes in the case under discussion, but reference is made to the relative advantages of this system compared with the use of an electrical linkage.

First to be described, is the character of the sound which is to be recorded and reproduced and the effects of reverberation and transients upon the listener's sensation of this sound.

Studio Characteristics and Transients

Phonographic reproduction may be termed perfect when the components of the reproduced sound reaching the ears of the actual listener have the same relative intensity and phase relation as the sound reaching the ears of an imaginary listener to the original performance would have had. Obviously, it is very difficult, if not impossible, to fulfill all of these requirements with a single channel system, that is, with a system which does not have a separate path from each ear of the listener to the sound source.

The use of two ears, that is, two-channel listening, gives the listener a sense of direction for each of the various sources of sound to which at a given moment he may be listening, and, therefore, he apprehends them in their relative distribution in space. It has been found possible with a single channel system, however, by controlling the acoustic properties of the room in which the sound is being recorded, to simulate to a considerable degree in the reproduced music the effective space relationships of the original. In this case, with a one-channel system, the directional effect is, of course, entirely absent, and the spatial relationship which is apprehended is probably due to the increased apparent reverberation of the instruments situated at the far end of the room as compared with those in the near foreground.

In recording work, therefore, one of the important acoustic characteristics of a room is its time of reverberation. Although it is probable that this is the most comprehensive single factor, experiment has shown that the shape of the room and the distribution and character of the damping surfaces play a part in the excellence of music in such a room.

It has been shown by Sabine[2] that for piano music, studios should have a time of reverberation measured by his method of 1.08 seconds. Experience has indicated that this figure is also very closely correct for other types of music. This figure of Sabine's assumes binaural listening. With single-channel systems, such as most of the present reproduction systems, whether for radio or the phonograph, the ability of the listener to separate the reverberation from the direct music by means of the sense of direction is completely removed and there is thrust upon his attention an apparently excessive amount of room echo. Experiment has shown that a time of reverberation for the recording room ranging from slightly more than ½ to slightly less than ¾ of Sabine's figure affords in the reproduced music the effect of a room with proper acoustics. When this effect is accomplished, the person listening to the reproduced music has the consciousness of the music being played in a continuation of the same room in which he is listening and also has a sense of spatial depth.

Experiment has indicated further that any transients set up by the recording or reproducing system constitute a second cause of apparent increased reverberation. The data obtained thus far are insufficient to permit assignment of quantitative values to the importance of these two factors.

At the present state of the art, the most important requirement of a recording or reproducing system is its frequency characteristic. This involves two factors—intensity versus frequency, and phase distortion versus frequency. The effect of the second of these factors is not thoroughly understood but as it is closely related to the production of transients it has to be considered, as mentioned above. The system to be described is, however, relatively free from violent phase shifts within most of the range covered, but does have some undesirable phase-shift characteristics with small accompanying transients near its limiting cut-off frequencies.

Frequency Requirements

The frequency range which it would be desirable to cover if, it were possible, with relatively uniform intensity for the transmission of speech and all types of music including pipe organ is from about 16 cycles per second to approximately 10,000.

2. Collected papers of W. Sabine.

It may be interesting to examine the record requirements for a band of frequencies this great. For the purpose of this illustration, a lateral cut record will be assumed although in all the factors except the time which the record will run. the arguments apply in a similar manner to the hill-and-dale cut. Since, for mechanical reproduction, the sound at a given pitch is radiated by means of a fixed radiation resistance, it is necessary that the record must be cut with a device the square of whose velocity is proportional to the sound power. Under these conditions, it is seen that for a given intensity of sound the amplitude is inversely proportional to the frequency of the tone, and that a point will be reached somewhere at the low end of the sound spectrum where this amplitude will be great enough to cut from one groove into the adjacent groove, or in case of vertical cut, to cut so deeply that with present materials the wax will tear instead of cut away with a clean surface. This means that there is an inherent maximum amplitude beyond which it is not commercially feasible to go. Similarly the minimum radius of curvature of sine waves of various frequencies cut at constant velocity is inversely proportional to the frequency, so that as higher and higher frequencies are reached the radius of curvature becomes smaller and smaller until finally it becomes too small for the reproducing needle to follow. There is, therefore, an inherent limit at the upper end.

In order to extend these limits, it is necessary in the case of the low end to make the spiral coarser and in the case of the high end to run the record at a higher speed. Both of these changes tend to decrease the time which a record of a given size can be made to play. The only alternative of these methods is to cut the record less loud than is the present standard practise and make the reproducing equipment more sensitive. This could easily be done if it were not for the "record noise" or "surface noise," as it is commonly called. Since this surface noise is already loud enough in comparison with the reproduced music to be somewhat objectionable, no appreciable gain in this direction can be made until the technique of record manufacture has been distinctly improved.

In this connection, there is one other interesting point. It has been suggested that if electric reproduction were used, it would be possible to cut the record with a characteristic other than uniform velocity sensitiveness and correct for the error by an electrical system whose characteristic is the inverse of the characteristic of record. If the change which is made in the recording characteristic tends toward cutting at uniform acceleration sensitiveness, the amplitude varies inversely as the square of the frequency and hence the difficulties at the low end of the scale are greatly enhanced. Similarly, if the records are cut more nearly at constant amplitude, the radius of curvature of the sine waves decreases as the square of the frequency, hence the difficulties are placed at the upper end. In the process which is being described in this paper, these limitations have been met commercially by having a frequency characteristic of the uniform velocity type between the frequencies of 200 and approximately 4000 cycles per second. Below 200 it has been necessary to operate at approximately constant amplitude with a resulting loss in intensity which loss increases as the frequency decreases. Above 4000 it has been necessary to operate at approximately constant acceleration with its consequent slight loss in intensity at the very high overtones. With a characteristic of this type, a range of frequencies from 60 cycles to 6000 can be recorded with reasonable success although the very low and very high range are slightly deficient. (See Fig. 14) With a record having such a frequency characteristic, the inherent limitations are divided between the two ends of the frequency band and where electrical reproduction methods are used, it is possible to employ a reproduction system whose frequency characteristic compensates for that of the record.

It should be pointed out that an attempt to record notes lower than the low cutoff of the above mentioned apparatus would result in recording only those harmonics of the notes which lie above the cut-off. This in no way prevents the listener from hearing the notes, reproduced by means of the harmonics only, as notes with the pitches of the missing fundamentals although it does somewhat change the quality of the tone.[3] If it were not for this ability of the ear to add the fundamental pitch of a note, of which only the harmonics are being reproduced, most of the older phonographs and loud speakers would have been totally useless for the reproduction of speech and music.

Mechanical Versus Electrical Recording

In attacking the recording part of the problem, two ways at once present themselves; first, the direct use of the power, of the sound being recorded, to operate the recording instrument; and second, the use of high quality electric apparatus with vacuum tube amplifiers in order to give more freedom to the artists and better control to the process. The amount of power available to operate the recorder directly from the sound in the recording room is so small as to make it extremely difficult to make records under natural conditions of speaking, singing, or instrumental playing. As the use of high quality electric apparatus with associated amplifiers has a very distinct advantage over the acoustic method, they have been adopted for the recording part of the process. Fig. 1A shows a picture of a group of artists recording by means of the sound power directly, while Fig. 1B shows a record being made by the same artists with the electric process.

3. Physical Criterion for Determining the Pitch of a Musical Tone, H. Fletcher, *Phys. Rev.*, Vol. 23, No. 3, March, 1924.

It will be noticed in Fig. 1A that the artists are grouped very closely about the horn. In the case of the weaker instruments such as violins, it has been possible to use only two of standard construction. The rest of the violins are of the type known as the "Stroh" violin which is a device strung in the manner of a violin but so arranged that the bridge vibrates a

FIG. 1A -PICTURE OF AN ORCHESTRA RECORDING FOR THE ACOUSTIC PROCESS. THIS PICTURE WAS FURNISHED THROUGH THE COURTESY OF THE VICTOR TALKING MACHINE COMPANY, CAMDEN, NEW JERSEY

diaphragm attached to a horn. This horn is directed toward the recording horn, as shown by the player in the foregound.

With such an arrangement of musicians, it is very difficult to arouse the spontaneous enthusiasm which is necessary for the production of really artistic music.

FIG. 1B PICTURE OF THE SAME ORCHESTRA SHOWN IN FIG. 1A, BUT RECORDING FOR THE ELECTRIC PROCESS. THIS PICTURE WAS FURNISHED THROUGH THE COURTESY OF THE VICTOR TALKING MACHINE COMPANY, CAMDEN, NEW JERSEY

In Fig. 1B the musicians are sitting at ease more nearly in their usual arrangement and all are using the instruments which they would use were they playing at a concert. Furthermore, the microphone is now sufficiently far away from the orchestra to receive the sound in much the manner that the ears of a listener in the audience would receive it. In other words, it picks up the sound after it has been properly blended with the reflections from the walls of the room. It is in this way that the so-called "atmosphere" or "room-tone" has been obtained.

In the old process, it sometimes happened that after the instruments had been arranged in such a manner that the relative loudness of the various part had been balanced correctly, it was found that the whole selection was either too loud or too weak. This usually meant a complete rearrangement of the players. With the flexibility introduced by the use of electrical apparatus including amplifiers, the control of loudness is obtained by simple manipulation of the amplifier system and is in no way related to the difficulties of the relative loudness of one instrument to another. The only problem for the studio director in this case is to obtain the proper balance among the various musical instruments and artists. The advantages derived from this added ease of control are also made manifest in that it is much easier and less tiresome for the artists and it is usually possible to make more records in a given time.

MECHANICAL VERSUS ELECTRICAL REPRODUCING

Where the question of reproduction is concerned, the same two alternatives mentioned for recording present themselves, namely, direct use of power derived from the record itself versus the use of electromechanical equipment with an amplifier. In this case, however, the situation is a little different as the power which can be drawn directly from the record is more than sufficient for home use. Since any method of reproducing from mechanical records by electrical means involves the use of a mechanical device for transforming from mechanical to electrical power and a second such device for transforming from electrical back to mechanical power, that is, sound, it is necessary to use two mechanical systems, one at each end of an electrical system. Where the power which can be supplied by the record, is sufficient to produce the necessary sound intensity, as in the case of home use, it is in general simpler to design one single mechanical transmission system than it is to add the unnecessary complications of amplifiers, power supply and associated circuits. In cases where music is to be reproduced in large auditoriums, the power which can be drawn from the record may be insufficient and some form of electric reproduction using amplifiers becomes necessary.

BRIEF DESCRIPTION OF RECORDING SYSTEM

The system used for recording consists of a condenser transmitter, a high quality vacuum tube amplifier and an electromagnetic recorder. Fig. 2 shows the calibration of the condenser transmitter and the associated amplifiers. The condenser transmitter and amplifiers are so designed that the current delivered to the recorder circuit is essentially proportional to the sound pressure at the transmitter diaphragm. The electromagnetic recorder, which will be described later, is designed to work with this type of system.

With the exception of this electromagnetic recorder, apparatus of this type has already been described in the literature.[4] In addition to this equipment which might be called the recording amplifier system, there is a volume indicator for measuring the power which is being delivered to the recorder and also an audible monitoring system. The audible monitoring system consists of an amplifier whose input impedance is high compared with the recorder impedance and a suitable loud speaking receiver. The monitoring amplifier is bridged directly across the recorder and operates the loud speaking receiver so that the operator may listen to the record as it is being made.

In the design of the recording and reproducing systems each part of the system has been made as nearly perfect as possible. Errors of one part have not been designed to compensate for inverse errors in another part. Although this method is the more difficult, its flexibility, particularly as regards the commercial possibilities of future improvements justifies the extra effort.[5] There is, therefore, no distortion in the record whose purpose is to compensate for errors in the reproducing equipment; the only intended distortion in the record being that required by the inherent limitations mentioned above. See Figs. 2, 14 and 20.

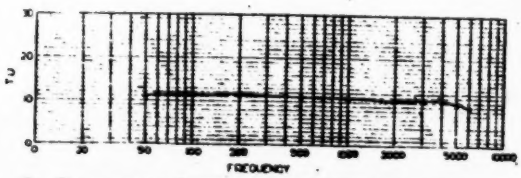

FIG. 2—CALIBRATION OF THE CONDENSER TRANSMITTER AND ASSOCIATED AMPLIFIERS

This curve shows merely the relative frequency sensitiveness of the system, the zero line having been chosen arbitrarily

GENERAL BASIS OF DESIGN

An interesting feature of the development of the mechanical and electromechanical portions of the recording and reproducing system is their quantitative design as mechanical analogs of electric circuits. Both the recording and reproducing systems are good examples of the use of this type of analogy.

The economic need for the solution of many of the problems connected with electric wave transmission over long distances coupled with the consequent development of accurate electric measuring apparatus has led to a rather complete theoretical and practical knowledge of electrical wave transmission. The advance has been so great that the knowledge of electric systems has surpassed our previous engineering knowledge of mechanical wave transmission systems. The result is, therefore, that mechanical transmission systems can be designed more successfully if they are viewed as analogs of electric circuits.

While there are mechanical analogs for nearly every form of electrical circuit imaginable, there is one particular class of electrical circuits whose study has led to ideas of the utmost value in guiding the course of the present development. This class of circuits consists of infinitely repeated similar sections of one or more lumped capacity and inductance elements in series and shunt and are commonly known as filters. The study of filters began with the work of Campbell[6] and a recognition of their importance as frequency selective systems in telephone repeaters, carrier systems, radio, signalling systems, etc., led to their intensive study. In the available literature is to be found a fairly complete statement of their properties and details of their design.[6]

It will be recalled in the case of the telephone circuit that the introduction of inductance coils at regular intervals in the circuit produced a remarkable change in the transmission characteristic. Over a broad band of frequencies the attenuation was reduced and made fairly uniform over that range while beyond a critical frequency called the cut-off frequency the attenuation became very high. In the ideal filters with zero dissipation the transmission characteristics are of the same nature but more clear cut. Structures of this type with infinitely repeated sections will have one or more transmission bands of zero attenuation and one or more bands having infinite attenuation. The impedance characteristics of such a structure measured from certain characteristic points will be pure resistance more or less uniform in the transmission bands, and pure reactance in the attenuation bands. These terminations are

4. Wente, E. C., "Condenser Transmitter as a Uniformly Sensitive Instrument for Measuring Sound Intensity," *Phys. Rev.*, Vol. 10, 1917.

Crandall, I. B., "Air-Damped Vibrating Systems," *Phys. Rev.*, Vol. 11, 1918.

Wente, E. C., "Electrostatic Transmitter," *Phys. Rev.*, Vol. 19, 1922.

Martin, W. H. and Fletcher, H., "High Quality Transmission and Reproduction of Speech and Music," TRANS. A. I. E. E., Vol. 43, 1924, p. 384.

Green, I. W. and Maxfield, J. P., "Public Address Systems," TRANS. A. I. E. E., Vol. 43, 1923, p. 64.

5. Green, I. W. and Maxfield, J. P., "Public Address Systems," TRANS. A. I. E. E., Vol. 42, 1923, p. 64.

6. Campbell, G. A., "On Loaded Lines in Telephonic Transmission," *Phil. Mag.*, March 1903.

Campbell, G. A., U. S. Patents 1,227,113; 1,227,114; "Physical Theory of the Electric Wave Filter," *Bell System Technical Journal*, November 1922.

Zobel, O. J., "Theory and Design of Uniform and Composite Electric Wave Filters," *Bell System Technical Journal*, January 1923.

Peters, L. J., "Theory of Electric Wave Filters Built up of Coupled Circuit Elements," TRANS. A. I. E. E., May 1923.

Carson, J. R. and Zobel, O. J., "Transient Oscillations in Electric Wave Filters," *Bell System Technical Journal*, July 1923.

Zobel, O. J., "Transmission Characteristics of Electric Wave Filters," *Bell System Technical Journal*, October 1924.

Johnson, K. S., and Shea, T. E., "Mutual Inductance in Wave Filters with an Introduction on Filter Design," *Bell System Technical Journal*, January 1925.

Johnson, K. S., "Transmission Circuits for Telephonic Communication," D. Van Nostrand, 1925.

mid-series; that is, the entering element being a series one of half the normal series element; or mid-shunt; that is, the entering element being twice the impedance of the normal shunt element. The corresponding impedances are called the mid-series and mid-shunt characteristic or iterative impedances.

If we retain the first few sections of such a structure

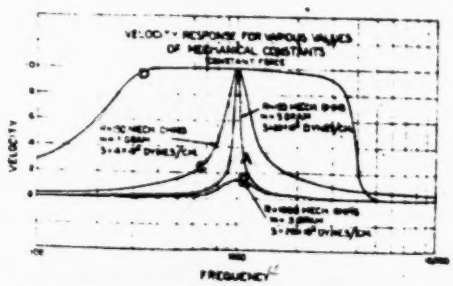

FIG. 9 - VELOCITY RESPONSE FOR VARIOUS VALUES OF MECHANICAL CONSTANTS

and terminate them with a resistance which is equal to the resistance impedance of the infinite line from which they were taken, the characteristics are substantially unchanged. It is understood, of course, that this resistance equals approximately the resistance impedance of the remainder of the infinite line at most of the frequencies in the transmission band in which we are interested.

The presence of small amounts of damping in the various elements also has but slight effect on the general characteristics. These results could in general be readily applied to the various telephone transmission problems because the source and load between which the filter system was inserted generally had or could be made to have a nearly resistance impedance equalling the mid-series or mid-shunt impedance of the filter within the transmission band. The filter and terminating impedances may then be said to be matched. Where adjacent sections in the filter have impedances similar in character but different in absolute magnitude they may be joined by a suitable transformer.

Many early attempts were made to design mechanical transmission systems having a wide frequency range in which highly damped single or multi-resonant systems were employed. In these attempts both of the obvious methods of increasing the damping were used, namely, that of adding a resistance to the system and that of increasing the value of the compliance and decreasing mass in such proportion as to maintain the same natural frequency. The former of these methods reduces the sensitivity of the system at the point where it is most efficient, (See Fig. 9), while the second method increases the response at the points where the system is less sensitive, namely, away from its resonance point. Fig. 9 shows four curves—first, a singly resonant system, Curve *A*; second, the same system with friction added, Curve *B*; third, the same system without the added friction but with an increase in compliance and a decrease in mass such that the natural period remains the same; Curve *C*, and fourth, a band pass type of circuit whose resistance impedance is the same as that of the system shown in Curve *A*. (See Curve *D*.)

The results of filter theory have shown how these resonances should be coordinated so that when a proper resistance termination is used high efficiency and equal sensitivity are obtained over a definite band of frequencies by elimination of response to all frequencies outside the band. With the electrical case of a repeated filter, each section considered by itself resonates at the same frequency but when combined into a short-circuited filter of n sections, there will be n natural frequencies. However, when such a system is terminated with a resistance which equals the nominal characteristic impedance in the transmission band, uniform response in the terminating resistance is obtained over the entire band.

DETAILED ANALYSIS OF MECHANICAL AND ELECTRICAL ANALOGS[7]

Before going on with a detailed treatment of the electrical analogues of the mechanical structures used in the problem of phonographic reproduction, a list of the corresponding quantities used in the two systems will be given, together with the symbols employed.

Mechanical		Electrical	
Force	= F (dynes)	Voltage	= E (volts)
Velocity	= v (cm. sec.)	Current	= i (amperes)
Displacement	= s (cm.)	Charge	= q (coulombs)
Impedance	= z (dyne sec. cm. or mechanical ohms)	Impedance	= Z (ohms)
Resistance	= r (dyne sec., cm.)	Resistance	= R (ohms)
Reactance	= x (dyne sec./cm.)	Reactance	= X (ohms)
Mass	= m (gms)	Inductance	= L (henries)
Compliance	= c (cm. dyne)[8]	Capacity	= C (farads)

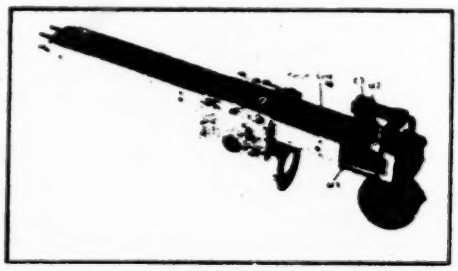

FIG. 10—THIS FIGURE SHOWS AN ELECTROMAGNETIC RECORDER COMPLETE EXCEPT FOR THE BOTTOM OF THE CASE

7. The authors wish to express their appreciation to Mr. E. L. Norton for his courtesy in working out the mathematics of the mechanical and electrical analogs which are shown in this paper.

8. H. W. Nichols, "Theory of Variable Dynamical Electrical Systems," *Phys. Rev.* Vol. 10, 1917.

General Design of Mechanical Systems

In designing mechanical systems of the band pass type, the problem is three fold—first, that of arranging the masses and compliances such that they form repeated filter sections; second, determining the magnitude of these quantities so that with or without transformers the separate sections all have the same cut-off.

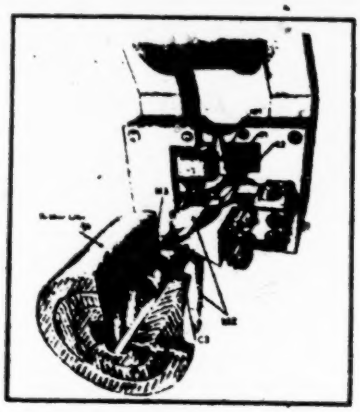

Fig. 11—Detailed Drawing of the Mechanical Filter of an Electromagnetic Recorder. (Lettering Same as in Fig. 12)

frequencies* and characteristic impedances; third, to provide the proper resistance termination. Where the transmitted mechanical power has not been radiated

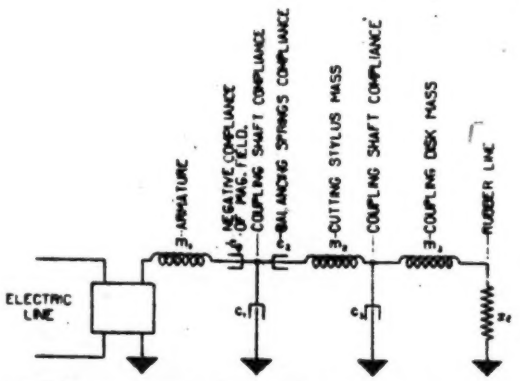

Fig. 12—Equivalent Electric Circuit of the Electromagnetic Recorder

as sound this third part has been one of the most difficult to fulfill.

In designing these systems, practical difficulties arose—first, the difficulty of insuring that the parts vibrated in the desired degrees of freedom only, and second, the difficulty of determining the magnitudes of the various effective masses, compliances and resistances. Before the work to be described could be carried out practically it became necessary to develop a method of measuring mechanical impedances[10]. This method of measurement has been very useful not only in determining the magnitudes of the impedances in the degrees of freedom in which it is desired that they shall operate, but in determining the impedances to motion of the various parts in directions in which they should not be permitted to vibrate. In connection with the measurement of the magnitudes of the parts in the desired degrees of freedom this method enables us to determine the constants of the mechanical networks under their conditions of operation. Experience so far has indicated that when all the degrees of freedom have been taken into account and when the dynamic axes of vibration have been properly chosen, the static and dynamic constants of the parts are the same, and it is then possible to check the parts by simple static measurements. In the early attempts to build these systems very large discrepancies between the static and dynamic characteristics were found.

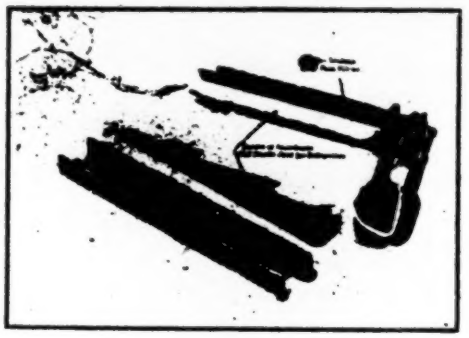

Fig. 13—Electromagnetic Recorder using Lumped Loaded Termination

The method of furnishing dissipation to the lumped loaded line is shown

The Recorder

One of the early practical phonographic applications of electric filter design to mechanical problems was the development of an electromagnetic recorder. The instrument as finally constructed is essentially a properly terminated three-section mechanical filter in which the recording stylus and its holder constitute the series mass in the second section. Since a filter of this type appears at its input end as approximately a pure resistance within the transmission band, the current in the series inductances, that is, in the mechanical

*It is of course permissible to have a section having a higher cut-off than the others provided its characteristic impedance is the same as that of the others over the transmission band of those having the lower cut-off.

10. Kennelly, A. E. and Affel, H. A., "The Mechanics of Telephone Receiver Diaphragms, as Derived from their Motional Impedance Circles," *Proc.* A. A. A. S., Vol. 51, No. 8, November, 1915.

Kennelly, A. E. and Pierce, G. W., "The Impedance of Telephone Receivers as Affected by the Motion of their Diaphragms," *Proc.* A. A. A. S., Vol. 48, No. 6, September, 1912.

case, the velocity of the series masses is proportional to the driving force.

Figs. 10, 11 and 12 show respectively, a complete recorder, a drawing of the mechanical filter of such a recorder and a diagram of the equivalent electric circuit.

Referring to Figures 11 and 12, all of the equivalents can readily be seen with the exception of the terminating resistance and the negative compliance, c_n. The reason for using the type of termination shown lies in the fact that most of the known mechanical resistances have values which are functions of frequency or of amplitude or of both. Also in most cases, the mechanical resistance is accompanied by either a mass or compliance reactance. By using a continuous transmission line (shown completely in Fig. 10 and partially in Fig. 11) which line is sufficiently long so that a wave entering it will be essentially absorbed before it has reached the far end, been reflected and returned to the entering end, it has been possible to use imperfect types of damping for this line and still

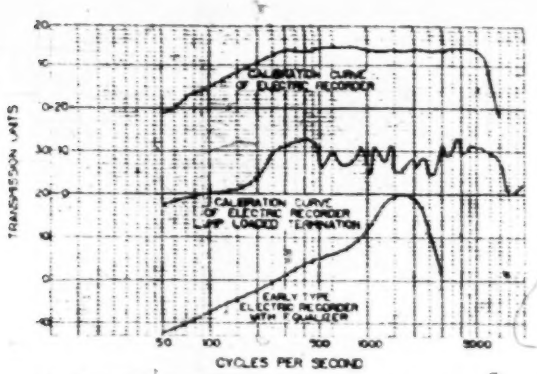

Fig. 14—Calibration Curve of Three Types of Electromagnetic Recorders

obtain over the desired band, an essentially pure resistance at the input end.

Fig. 14 shows calibration curves of three types of recorders. The bottom curve shows an early type of highly damped singly resonant system. The middle curve is a calibration of a low pass mechanical filter type using lumped loading in the resistance line.* The upper curve shows the calibration of the recorder shown in Fig. 10.

The compliance $-c_0$ is a mechanical quantity for which there is no simple electric analog. In a balanced armature type of structure such as that shown in Fig. 11, the action of the field on the armature, when it is at its center point, is balanced. If, however, the armature be deflected, a small distance from this equilibrium, there is exerted by the magnetic field a torque tending to pull the armature further away from its center position. The value of this torque for small amplitudes is proportional to the angular displacement. It is therefore seen that this quantity is of the nature of a compliance but that the back force is in a reverse direction to that required for a positive compliance.

*For a description of this, see the complete paper available in pamphlet form upon request.

Design of the Reproducing Apparatus

As the analogy between the mechanical and electrical filter is more perfectly shown in the case of the reproducing equipment, the detailed quantitative descrip-

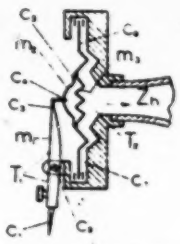

Fig. 15—Diagrammatic Sketch of the Mechanical System of the Phonograph

tion will be given in this connection.* Figs. 15 and 16 show respectively a diagram of the reproducing system and its equivalent electric circuit. From these diagrams it is evident which units in the mechanical system correspond to the various electrical parts. As the series compliances c_3, c_1 and c_4 have been made so large that the low frequency cut-off caused by them lies well below the low frequency cut-off of the horn, an inappreciable error is introduced in using for design

Fig. 16—Electric Equivalent of the System Shown in Fig. 15

purposes formulas of low pass filters[11]. The two formulas which will be used are as follows:

$$f_c = \frac{1}{\pi}\sqrt{\frac{1}{mc}} \qquad (12)$$

Where

f_c = cut-off frequency of a lumped transmission system in cycles per second

11. Campbell, G. A., "On loaded lines in Telephonic Transmission," *Phil. Mag.*, March, 1903.

c = shunt compliance per section in centimeters per dynes

m = series mass per section in grams

$$z_0 = \sqrt{\frac{m}{c}} \quad (13)$$

Where z_0[12] is the value of characteristic impedance over the greater part of the band range.

Equations (12) and (13) which form the basis of the design work contain four variables, f_c, c, m and z_0. It is, therefore, necessary to determine two of them by the physical requirements of the problem after which the other two are determined. The upper cut-off frequency f_c was arbitrarily chosen at 5000 pps. as a compromise between the highest frequency occurring on the record and the increase in surface noise as the cut-off is raised. The choice of the other arbitrarily set variable came after considerable preliminary experimenting and was fixed by the difficulty of obtaining a diaphragm which is light enough and has a large enough area. Hence the effective mass of the diaphragm m_3, (Figs. 15-16) was fixed at 0.186 grams which value can be obtained by careful design. The effective area can be made as large as 13 square centimeters. For convenience let the arbitrary value chosen for $f_c = \bar{f}_c$ and the value of $m = \bar{m}_3$.

Solving Equations (12) and (13) for c and z_0, we get

$$c = \frac{1}{\pi^2 \bar{f}_c^2 \bar{m}_3} \quad (14)$$

$$z_0 = \pi \bar{f}_c \bar{m}_3 \quad (15)$$

also

$$z_0 = \frac{1}{\pi c \bar{f}_c} \quad (16)$$

In order to obtain the low value of mass mentioned, with a large enough area, it was necessary to make the diaphragm of a very stiff light material. An aluminum alloy sheet 0.0017 in. thick was chosen and concentrically corrugated as shown in Figs. 17 and 18. These corrugations are spaced sufficiently close so that the natural periods of the flat surfaces are all above $\bar{f}_c$. To insure that this central stiffened portion should vibrate with approximate plunger action, which is more efficient than diaphragm action, it is driven at six points near its periphery.

Reference to Figs. 15 and 16 and Equation (14) shows that the compliance of the air chamber c_7, of the spider legs c_5 and shunt tip of the needle arm c_2 are determined. Also the mass of the spider m_2 and the effective mass of the needle arm m_1, as viewed at the point where it is attached to the spider, are determined.

The impedance looking into the system from the record is determined by the rate at which it is necessary to radiate energy in order that the reproduction may be loud enough. The power taken from the record is approximately $v^2 z_0$ since z_0 is a resistance over most of the band. Experiment has shown this value of z_0 to be approximately 4500 mechanical ohms.

But substituting in Equation (13) the value of $\bar{m}_3$, and from Equation (14) the value of c_4, we find that the impedance is only 2920 mechanical ohms. It is, therefore, necessary to use a transformer whose impedance ratio is $\frac{4500}{2920}$. From this and a knowledge of filter structures the needle-point compliance can be determined. The value obtained is easily realized with commercial types of needle.

It will be noted that the record is shown in Fig. 16 as a constant current generator, i. e., a generator whose impedance appears high as viewed from the needle point. That this is necessary is obvious when it is remembered that, if the impedance looking back into the record were to equal the impedance of the filter system, the walls of the record would have to yield an amount comparable with one-half the amplitude of the lateral cut. This would cause a breakdown of the record material with consequent damage.

The design of the system is, therefore, complete except for the resistance termination which is supplied by the horn for all frequencies above its low frequency cut-off. The characteristics of the horn will be dealt with later. The resistance within the band looking in at the small end of the horn is $G A_2$ where G = mechanical ohms per square centimeter of an infinite cylindrical tube of the same area, and A_2 = area in square centimeters of the small end of the horn.

Let A_1 = the effective plunger area of the diaphragm (as previously mentioned this is 13 sq. cm.). The impedance looking back at the diaphragm is

$$z_0 = \pi \bar{f}_c \bar{m}_3 = 2920 \text{ mechanical ohms}$$

from Equation (15), and the impedance looking at a horn whose small end area equals A_2 is

$$z_4 = r_0 = A_2 G \quad (17)$$

Substituting

A_2 = 13 sq. cm.

G = .41 ohms per cm.^{2} we get

$z_4 = r_0$ = 533 mechanical ohms

This is entirely insufficient so that the air-chamber transformer becomes necessary.

To calculate the necessary ratio of areas on the two sides of the air-chamber transformer, the following formula is needed. The formula assumes the chamber to be relatively small compared with all wave lengths of the

12. z_0 may be called nominal mid-shunt or mid-series impedance. Their actual values in the transmission band being at any frequency f,

$$\text{mid-series} = z_0 \sqrt{1 - \left(\frac{f}{f_c}\right)^2}$$

$$\text{mid-shunt} \quad \frac{z_0}{\sqrt{1 - \left(\frac{f}{f_c}\right)^2}}$$

sound to be transmitted, that is, the pressure changes throughout the chamber are substantially in phase.

$$\frac{z_0}{z_h} = \frac{A_1^2}{A_2^2} \tag{16}$$

Where

z_0 = the impedance of the primary side of the transformer in mechanical ohms

z_h = the impedance on the secondary side of the transformer in mechanical ohms, *i. e.*, the horn impedance

Solving this equation with the aid of Equations (15) and (17), we get

$$A_2 = \frac{G A_1^2}{\pi f_c m_c} \tag{22}$$

(A more complete description of this part of the

FIG. 18—SECTIONAL DRAWING SHOWING CONSTRUCTION OF THE SYSTEM SHOWN IN FIG. 17

design is given in the complete paper which will be published in the A. I. E. E. TRANSACTIONS for 1926.)

The horn which has been used as a terminating resistance to the mechanical filter structure is a logarithmic one. The general properties of logarithmic horns have been understood for some time.[13]

There are two fundamental constants of such a horn—the first is the area of the large end and the second the rate of taper. The area of the mouth determines the lowest frequency which is radiated satisfactorily. The energy of the frequencies below this is largely reflected if it is permitted to reach the mouth.

From the equations given by Webster,[13] it can be shown that all logarithmic horns have a low frequency cut-off which is determined by the rate of taper. If the rate of taper is so proportioned that its resulting cut-off prevents the lower frequencies from reaching the horn mouth, the horn will then radiate all frequencies reaching its mouth and very little reflection will result.[14] It is, therefore, possible to build a horn having no marked fundamental resonance.

Since the characteristics of [illegible] determined

FIG. 19—SECTIONAL VIEW OF THE FOLDED HORN SHOWING THE AIR PASSAGE

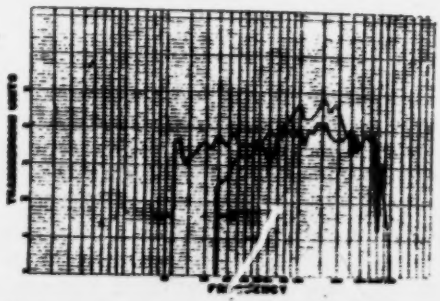

FIG. 20—RESPONSE FREQUENCY CHARACTERISTIC OF TWO PHONOGRAPHS. CURVE *A* SHOWS THE CHARACTERISTIC OF THE BAND PASS FILTER TYPE DESCRIBED. CURVE *B* SHOWS THE CHARACTERISTIC OF ONE OF THE BEST COMMERCIAL MACHINES PREVIOUSLY ON THE MARKET

by the area of its mouth and by its rate of taper the length of the horn is determined by the area of the small end. This area is determined in turn by the mechanical impedance and effective area of the system

13. Webster, A. G., "Acoustical Impedance and Theory of Horns and Phonograph," *Proc.* Nat. Acad. of Sci., 1919.

14. The authors wish to express their appreciation in this connection of the work of Mr. P. B. Flanders who carried out the mathematical investigation of these relationships and to Mr. A. L. Thuras who checked experimentally the mathematical theory.

which it is terminating, as shown in Equation (22). It is seen, therefore, that the length of the horn should not be considered as a fundamental constant. A paper describing the design of horns based on these principles is being prepared.

An interesting feature of the horn which has been built commercially is its method of folding. The sketch in Fig. 19 shows a shadow picture of the horn. It will be noticed that the sound passage is folded only in its thin direction, which permits the radius of the turns to be small and thereby makes the folding compact.

Fig. 20 shows the frequency characteristic of a phonograph designed as shown above with a logarithmic horn whose rate of taper and area of mouth opening place the low cut-off at about 115 cycles. It also shows the characteristics of one of the best of the old style phonographs. Curve *A* represents the new machine, while Curve *B* represents the old style standard machine.

DEFENDANT'S EXHIBIT NO. 11.

473

J. W. MAXWELL.

Mechanical-Telephone.

No. 216,051. Patented June 3, 1879.

Fig. 1.

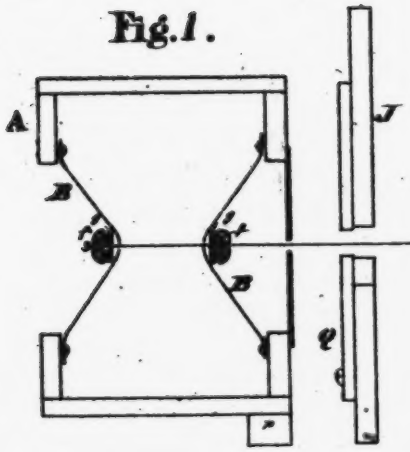

Fig. 2.

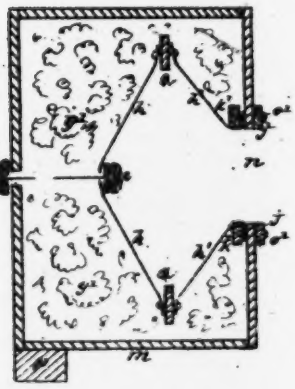

Witnesses.

A. M. Stout

F. B. Mott

Inventor,

J. W. Maxwell

UNITED STATES PATENT OFFICE.

JOSEPH W. MAXWELL, OF LOUISVILLE, KENTUCKY.

IMPROVEMENT IN MECHANICAL TELEPHONES.

Specification forming part of Letters Patent No. **216,051**, dated June 3, 1879; application filed November 7, 1878.

To all whom it may concern:

Be it known that I, JOSEPH W. MAXWELL, of the city of Louisville, county of Jefferson, and State of Kentucky, have invented certain improvements in Telephony, of which the following is a specification.

Whereas in an application made by myself for Letters Patent of the United States, filed in the United States Patent Office on the 14th day of October, 1878, for improvement in telephony, I have shown and described an apparatus (among other things) consisting of two sounding-boards and their vibrators, of the same construction and material, placed together apex to apex, apart a few inches only, on the same transmitting-wire, and connected together by another short wire, which extends from the apex of one to the apex of the other, the means of fastening being knots formed on the extremities of the short wire after they had been extended through the vibrators; one apparatus consisting of this combination of parts is placed at each end of a long transmitting-wire, which is passed through the centers of the vibrators, and over and along which vibrations of air or sounds are transmitted from one end of the line to the other, and each apparatus is held to its connection with the wire by a button on each end thereof, and the wire is held taut or otherwise, as the one apparatus may be moved to or from the other.

The sounding-boards may be made of soft pine wood, or any other suitable material, and should have openings in their central portions, over which the vibrators are to be fastened, and should be mounted upon suitable supports or inclosed in suitable boxes, and should be made quite thin, in order to increase their capacity for vibration; and the vibrators are made of sheep-skin or like material, and should be fastened upon the sounding-boards over the openings therein while in a wet and plastic condition, and then have their central portions drawn out and stretched until they assume a funnel-like form, and then be allowed to dry and retain that form.

Now my invention herein claimed relates to the construction of a vibratory apparatus of quite different form and of a much better result from the one hereinbefore described.

It consists, to some extent, of an inclosing-box, within which the vibrators are operated, the box having a suitable opening in and through the end of it which is opposite to the other end of the line of communication, into which vibrations are received and out of which they are delivered; but the apparatus proper consists of two diaphragms or vibrators of the same material before mentioned, and one of them of exactly the same form, and the other of the same general form, but having a central opening in it, to correspond in form and size with the one in the end of the containing-box before mentioned; and these two vibrators, which are in a circular form, by their outer edges are fastened to and upon the two opposite sides of a thin board of soft pine wood, or other vibratory wood or material, with their concave sides next to each other, and the board is cut away in the center, so as to leave a large opening in circular form in it, and the residue of the board serves as a frame for the two vibrators to hold their outer edges distended, and it does not touch the containing-box at all; and the one of the vibrators having the opening in it has the edge around the opening fastened upon another board, which has also an opening in it, corresponding in size and form with the one in the vibrator and the one in the end of the containing-box, and the board is attached to the inside of the end of the box, so that the openings in the vibrator, board, and box constitute an avenue for the reception and delivery of air-vibrations into and out of the apparatus. The transmitting-wire is passed in through the opposite end of the box, and through the apex of the vibrator that has no central opening in it, and is there held by a button on the end of it on the inside of the vibrator, and when the wire is stretched taut both vibrators are stretched and held taut likewise, and the whole apparatus is held suspended upon the wire at one apex, and the attachment to the board (which is attached to the end of the box) at the other, and the result of this construction is a high degree of vibratory power.

My said invention will be more particularly described with reference to the accompanying drawings, in which Figure 1 represents a central vertical longitudinal section of the said apparatus described in my said application filed

October 22, 1878; and Fig. 2, a like view of the containing-box and operative parts of this my improvement claimed herein.

In Fig. 2, *a* indicates the board to which the outer edges of the vibrators are fastened; *h*, the vibrator, attached to the transmitting-wire T by the button *e* and *h'*; the other one of said vibrators, and the same which has the central opening, *n*, in it; and *k*, the board to which that vibrator is attached by the edge around its opening, and it is fastened upon the inside of the end of the box, so that the opening at *n* is through vibrator, board, and box. *g* indicates the cotton or wool placed around the vibrators within the box, in order to destroy the ring of the wire T. The vibrators are stretched and held taut by means of the button *e* on the wire T; and but for the button *i* on the wire outside of the box the vibrators would collapse when the wire was relaxed.

In this construction it will be observed that a large portion of the apparatus is made of the sheep-skin or other animal membrane, and there is in it no more of wood, which is itself capable of a high degree of vibration, than enough for a frame to hold the vibrators in position and proper shape, and that it is therefore very efficient for the purpose of condensing and strengthening air-vibrations for transmission, and I have found it to be so by actual experiment, much more so than the one shown in Fig. 1.

I have found also by experiment that a vibrator that is from seven to eight inches in diameter through the center from one outer edge to the other is the most efficient, and that when they are much smaller than this the vibrations made by the vocal organs are of a nasal character; but when an apparatus of proper size is used at one end of the line, then a much smaller one may be used at the other without impairing perceptibly the effect.

A very good effect is secured by using the construction shown in Fig. 2 at one end of the line, and that shown in Fig. 1 at the other.

What I claim as my invention, and desire to secure by Letters Patent, is—

The vibratory apparatus composed of the vibrator *h* and the vibrator *h'*, having the opening *n*, and the suspended board *a* and the fixed board *k'*, constructed and arranged substantially as and for the purpose described.

J. W. MAXWELL.

Witnesses:

I. M. STEPHENS,

A. M. STOUT.

DEFENDANT'S EXHIBIT NO. 11-A.

(No Model.)

J. E. DANN & J. LAPP.

TELEPHONE TRANSMITTER.

No. 338,660. Patented Mar. 23, 1886.

Fig. 1.

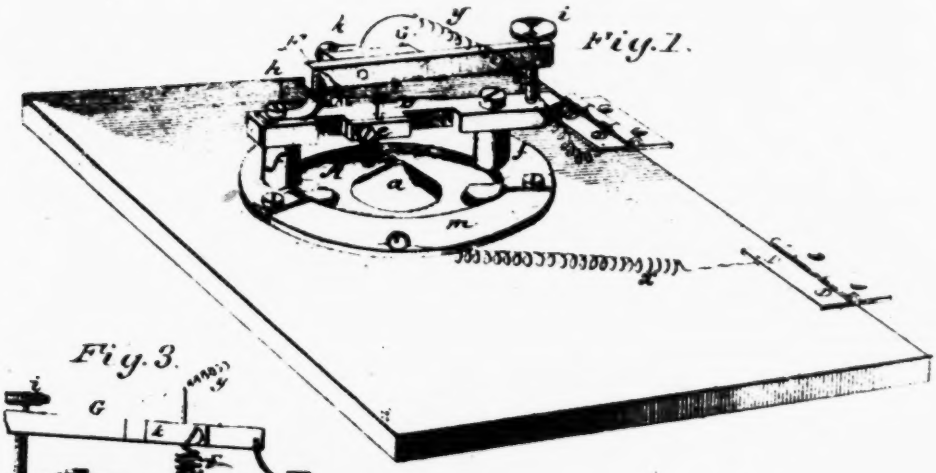

Fig. 3.

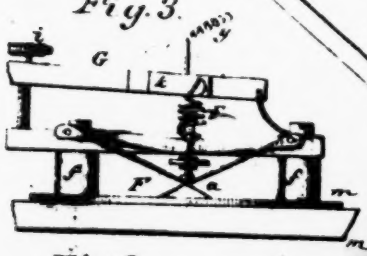

Fig. 2.

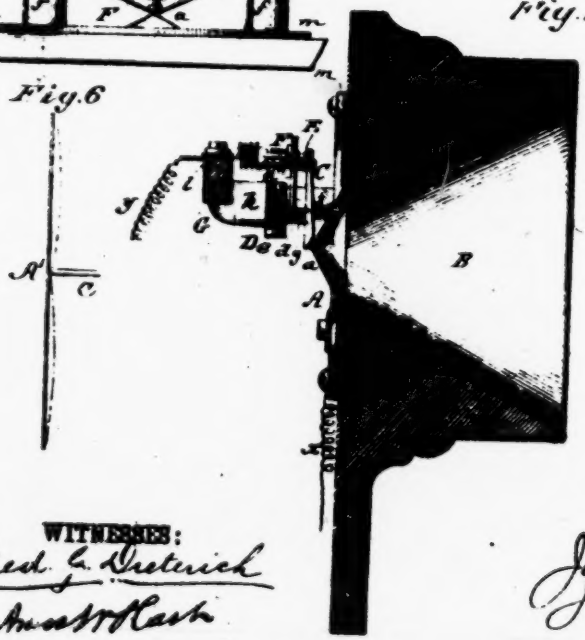

Fig. 4.

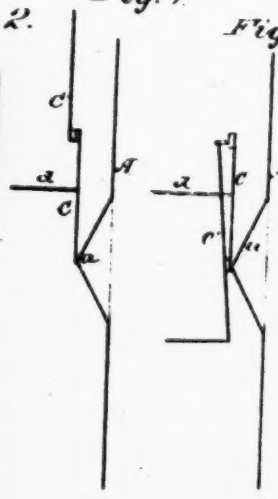

Fig. 5.

Fig. 6.

WITNESSES:

Fred. G. Dieterich

Arnold Kastl

INVENTOR:

John E. Dann

John Lapp

BY Munn & Co

ATTORNEYS.

UNITED STATES PATENT OFFICE.

JOHN E. DANN AND JOHN LAPP, OF HONEOYE FALLS, NEW YORK.

TELEPHONE-TRANSMITTER.

SPECIFICATION forming part of Letters Patent No. 338,660, dated March 23, 1886.

Application filed December 24, 1885. Serial No. 186,644. (No model.)

To all whom it may concern:

Be it known that we, JOHN E. DANN and JOHN LAPP, citizens of the United States, residing at Honeoye Falls, in the county of Monroe and State of New York, have invented a new and useful Improvement in Telephone-Transmitters, of which the following is a full, clear, and exact description.

Our invention is an improvement in the class of transmitters having vibrating electrodes arranged adjacent to and one of them normally pressing upon the diaphragm, and in some cases attached to it.

The object we aim at and have attained is the production of a loud-speaking instrument capable of operating with a minimum expenditure of battery-power or electro-motive force.

To this end we have devised a new and simple construction of the diaphragm, and also provided a new and improved mechanism for co-operating therewith, as hereinafter fully described.

In the accompanying drawings, Figure 1 is a perspective view of our invention applied to the door of a transmitter-box. Fig. 2 is a central cross-section of the same. Fig. 3 is a side view of a portion of the mechanism. Figs. 4 and 5 illustrate modifications. Fig. 6 illustrates a defective operation of the ordinary diaphragm employed in telephones.

The sheet-metal diaphragm A is constructed with a central conical portion, *a*, which may be formed integral therewith or made separately and attached by solder, brazing, or in any other suitable manner. The diameter of the base of the hollow cone may be varied considerably; but we prefer it shall equal and even slightly exceed that of the contiguous inner end of the mouth-piece B, of which it forms practically a conical extension. By this construction and combination of parts the whole force of the air-current or sound-waves from the mouth of the person speaking into the instrument is concentrated on the cone—that is to say, on the central portion of the diaphragm—thereby producing the maximum effect in respect to the required vibration of the latter, and the transmission of sound with corresponding loudness, force, and precision.

A lever, C, which constitutes one of the electrodes, is permanently attached to the apex of the cone *a* through the intermediary of a spring or other device which will allow the lever to vibrate within certain narrow limits. The lever may, however, be rigidly attached to the cone, and in that case of course the diaphragm must yield enough to permit due vibration of the lever. The fulcrum of the latter is a spring or flexible plate, *d*, which is held adjustably by a clamp, *e*, to a fixed bar, D, supported by posts *f*. A shorter lever, C', is arranged parallel to and in front of the former, C, and also attached to its middle portion by a short spring, *g*, which constitutes a yielding fulcrum that permits slight movement of such shorter lever toward and from the other. The outer or free end of this lever C' has an eye or socket that holds the other electrode—to wit, a short metallic pin, E. The latter is suitably insulated in the socket by rubber or equivalent means. The inner end of the pin E rests normally in light contact with the free end of lever C, and it is the vibration of these two parts C and E, corresponding exactly to the vibration of the diaphragm, that effects the transmission of speech.

It is obvious that the contact-points or electrodes proper may be multiple instead of single, although we prefer and intend to use the latter.

When a current is sent through a freely-suspended carbon electrode, it is repelled somewhat from an opposite electrode. We utilize this principle of repulsion as an aid in avoiding the "stick," which two metallic electrodes exhibit, by inserting a piece of carbon in the outer or free end of the lever C, so that the metallic electrode rests in contact therewith, instead of with the lever proper. By this means rapidity of vibration of the electrodes is efficiently promoted, and the instrument thereby adapted to transmit speech with greater fidelity and speed.

As a means of support and adjustment for the pin-electrode C, we connect it by means of a spiral spring, F, with a lever, G, which is arranged parallel with the fixed bar D, and attached to it by a flexible fulcrum-piece, *h*. Said lever is provided with a screw, *i*, at its opposite or free end, for adjusting it closer to or farther from the bar D. A screw-clamp, *k*, secures the spring E to the lever, and it is suitably insulated by a rubber block, *l*.

In practice the diaphragm A and spring F are connected by wires *x y* with the primary of an induction-coil and with a battery, neither of which is shown in the drawings; or the instrument may be set in a battery-circuit with an intensity-coil properly connected with the line-wire. When a sound-wave strikes upon the diaphragm, its main force is concentrated at the center, which is capable of the greatest amplitude of vibration, and the consequent movement of the diaphragm is transmitted to the electrode-lever C, so that the free end of the latter vibrates with a greater amplitude than the diaphragm, owing to the fulcrum *d* being nearer the end attached to the cone *a*. This vibration of the lever-electrode C effects the transmission of sound through the receiving-instrument at the other end of the line.

In addition to the function of the cone *a* in concentrating the sound-waves, as above stated, it has a still more important one, which we will explain as follows: When a sound-wave strikes upon a diaphragm of the usual form with whose center an electrode rests in contact, the latter resists more or less the tendency of such central portion to yield and assume a concavo-convex form, and consequently the portion surrounding the center yields first, as illustrated in an exaggerated way in Fig. 6, in which A′ indicates the diaphragm and C″ an electrode. The result is a failure to transmit and reproduce sound with the desired loudness and accuracy; but by use of the cone *a* this defect is avoided, since the air-wave pressure forces back the cone or central portion of the diaphragm before or else simultaneously with the portion that surrounds it. In other words, the diaphragm vibrates with the freedom and in the manner required to produce, in connection with the other mechanism employed, the desired perfection of result.

A still further advantage attends the use of the cone, since it is capable of withstanding the pressure and thrust to which it is subject in acting on the attached lever, and hence the diaphragm is made correspondingly more durable than if constructed in the usual form.

In further relation to the cone *a* we desire it to be understood that while it is desirable and even necessary that its inner side shall be open, as shown, in order to produce the best result, yet we do not propose to here limit ourselves to such construction, since a good degree of success may be attained by closing the base of the cone—that is to say, by employing a diaphragm of the ordinary form and attaching a hollow cone to its center.

Our improved diaphragm is applicable to other telephonic instruments beside transmitters.

In respect to adjustments it may be stated that the spring-fulcrum *d* of the inner lever-electrode, C, is properly adjusted when the apparatus is prepared or "set up" for use. The lever G is adjusted by screw *i* to increase or lessen the tension of the spring F, and thereby regulate the contact-pressure between the electrodes E C, as required for the desired perfection of operation.

In practical operation of the instrument a metallic sound arises from the molecular or mechanical vibration of movable parts, particularly the electrode-levers and the spring F. To quickly destroy such vibration we employ elastic bands, Fig. 3, which are stretched between suitable points of attachment and press lightly on the spring and pin-electrode E and both levers C and C′, as shown. It is also expedient to employ dampers or elastic pressure-plates, as shown in the drawings, to limit the vibration of the diaphragm, and thus choke out the metallic clang.

We do not propose to limit our invention to the described and preferred arrangement of levers shown, since various others are practicable. As an example, the outer electrode might be attached to the lower end of a metal strip or bar, C′, as shown in Fig. 4, and said bar may be a spring, or it may be inelastic, and in the latter case the action of gravity would be depended on to hold it in light contact with the other electrode, C.

Fig. 5 illustrates still another arrangement, wherein both levers C C′ are attached to the cone, which thus acts directly on both when vibrated.

We are aware that a diaphragm having a conical portion with a surrounding annular part which is curved transversely (or in cross-section) has been suggested or employed, and we therefore restrict our claim to the precise construction of our diaphragm, which experiment has demonstrated to be advantageous.

We propose to file another application in which the function and advantages of a carbon electrode in transmitters of this particular class shall be fully described, and in which it shall be claimed more broadly than in this application.

What we claim is—

1. The diaphragm having a central hollow cone and a surrounding annular part, all portions of which are flat or lie normally in the same plane, said diaphragm being free to vibrate, as shown and described.

2. The combination, with the diaphragm and its central hollow cone, of electrode-levers having yielding fulcra, and one of them attached to said cone, substantially as shown and described, to operate as specified.

3. The combination of the spring F with the connected electrode-levers, the spring or elastic fulcra therefor, the diaphragm having a hollow cone to which one of said levers is attached by a yielding connection, all as shown and described.

4. The combination of the spring F with the pin-electrode, the lever C, and the cone-diaphragm, substantially as shown and described.

5. In a telephone of the character herein-

before specified, the combination, with the diaphragm and an electrode, E, of the lever C, connected with the diaphragm and carrying a carbon contact-point.

6. The combination, with the diaphragm and the lever-electrode C, attached thereto, and the spring-fulcrum *d* therefor, of the electrode C' and its spring-fulcrum *g*, substantially as shown and described.

7. The combination, with the diaphragm and the vibrating lever-electrode C, attached thereto and having a spring-fulcrum, of the second electrode-lever, C', and a spring-fulcrum therefor, which connects it with the other, C, at a point between the fulcrum and free end of the latter, as shown and described.

8. The combination, with the diaphragm, the electrode-levers, the spring F, and a fixed bar, D, of the adjusting-lever G and the screw *i*, all arranged as shown and described to operate as specified.

JOHN E. DANN.
JOHN LAPP.

Witnesses:
AMOS W. HART,
P. B. TURPIN.

2

N° 3393.—A.D. 1901.

Improvement in the Diaphragms of Phonographs, Musical Instruments, &c.

COMPLETE SPECIFICATION.

Improvement in the Diaphragms of Phonographs, Musical Instruments, and analogous Sound-producing Recording or Transmitting Contrivances.

I, JOHN MATTHIAS AUGUSTUS STROH, Electrical Engineer, of 98, Haverstock Hill in the County of London, do hereby declare the nature of this invention and in what manner the same is to be performed, to be particularly described and ascertained in and by the following statement:—

The diaphragms of phonographs, graphophones, and analogous sound-producing or transmitting instruments are usually made in the shape of a flat circular disc which is supported at its edges and free to vibrate in the centre.

If such a diaphragm is set in motion by means of a solid body acting on the centre, the amplitude of the vibrations is a maximum in the centre and gradually diminishes towards the circumference, and the waves of air produced by such a diaphragm differ therefore according to their distance from the axis of the diaphragm.

The present invention has for its object, to increase the efficiency and uniformity of the vibrations, and thereby to increase the quality of the sounds, or the accuracy of their reproduction. For this purpose I make the centre of the diaphragm rigid by giving it the shape of a cone having its apex at the point where vibrations are imparted to the diaphragm or transmitted by the same, while the annular portion between the base of the cone and the edge of the diaphragm may be flat or corrugated, the number and depth of the corrugations depending on the nature of the diaphragm and on the effect desired. When the vibrations are imparted to the diaphragm from the centre, the conical part will move up and down as a whole, without materially altering its shape, while the corrugated part yields to each movement of the cone, and as the cone occupies preferably about two-thirds of the diameter of the diaphragm, a larger stratum of air will be set in motion, or the vibrations will be more uniform than in the case of a flat diaphragm. The concentric corrugations of the rim facilitate the motion of the cone in the direction of its axis, while preventing or impeding vibrations in any other direction, which accidental or irregular vibrations are supposed to be the cause of impure sounds. The diaphragm may be made of metal, ebonite, celluloid, or other suitable material, and the most suitable thickness should be ascertained by experiments.

This invention is applicable to phonographs, graphophones, and other instruments, in which the production of sound depends upon the vibration of a diaphragm, or where a diaphragm is used for transmitting vibrations of a solid body to a stratum of air, for instance, in the violins or other stringed instruments described in my Patent Specification No. 9,418 of 1899.

According to the present invention the diaphragms of violins and similar stringed instruments are made conical in the centre and corrugated at the circumference.

In the drawings filed with the Provisional Specification Fig. 1 is an axial section of a diaphragm embodying my invention, as applied to a violin.

Fig. 2 represents a modification, and Fig. 3 another modification.

Having now particularly described and ascertained the nature of my said invention, and in what manner the same is to be performed, I declare that what I claim is:—

instruments, a diaphragm which is conical in the centre and flat or corrugated at the circumference, substantially as described and for the purpose specified.

2. In musical instruments of the violin class, having a sound-producing diaphragm adapted to receive mechanical vibrations in the centre and to communicate them to a stratum of air, the improved shape of the diaphragm, substantially as described and for the purpose specified.

Dated this 6th day of November 1901.

FAIRFAX & WETTER
Patent Agents. 37 & 39, Essex Street, Strand, London.

A.D. 1901, Feb. 16. No. 3393.

STROH'S PROVISIONAL SPECIFICATION. (1 SHEET)

Fig 1

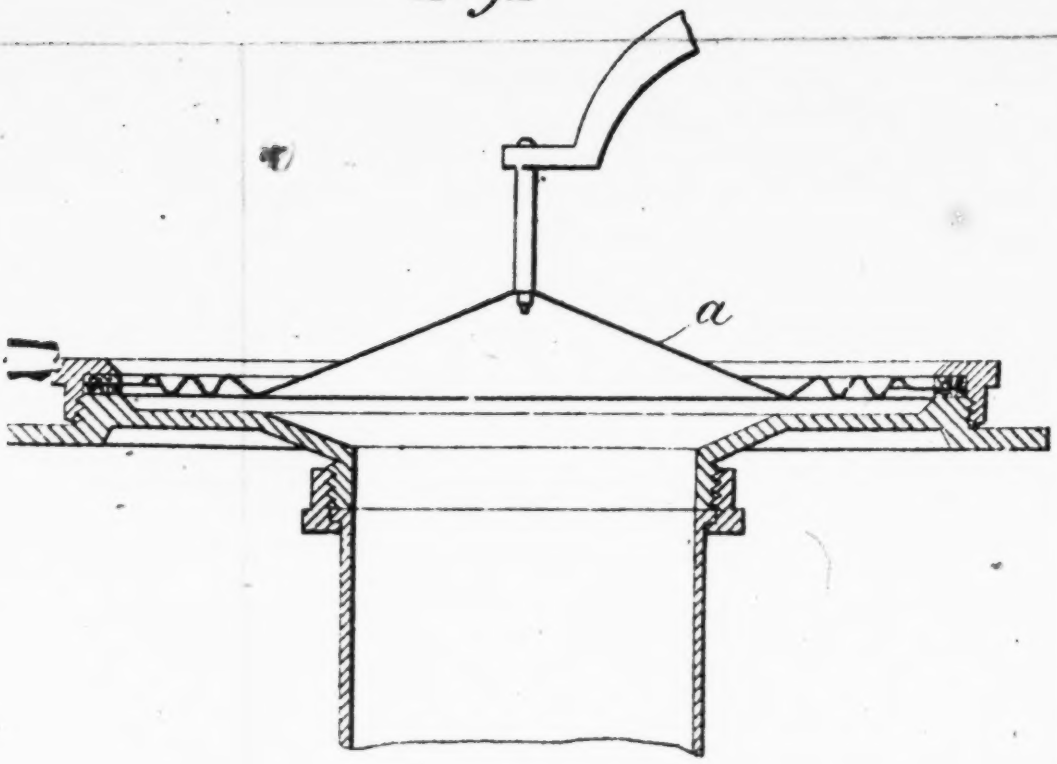

Fig. 2.

Fig. 3.

[This Drawing is a reproduction of the Original on a reduced scale.

DEFENDANT'S EXHIBIT NO. 11-C.

No. 890,142. PATENTED JUNE 9, 1908

T. KRAEMER.

SOUND BOX FOR TALKING MACHINES.

APPLICATION FILED OCT. 7, 1907.

Fig. 1.

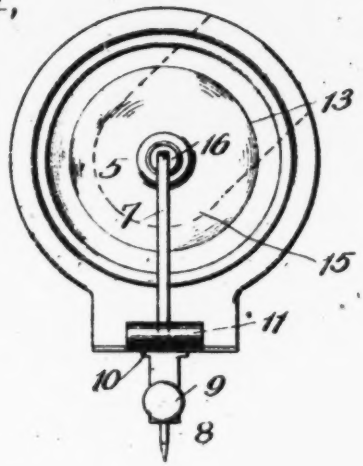

Fig. 2.

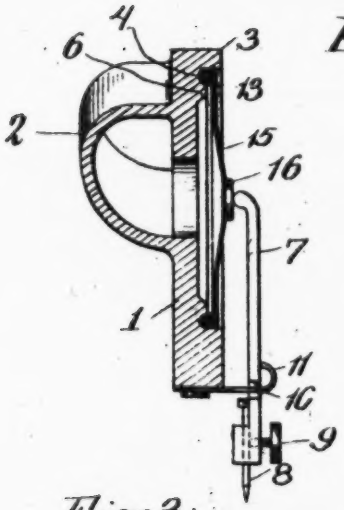

Fig. 3.

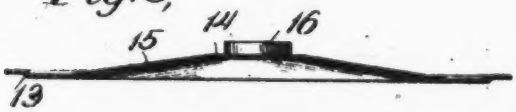

WITNESSES:

I. McIntosh

A. Edmunds.

INVENTOR

Thomas Kraemer.

BY

J. C. Edmunds

ATTORNEY

UNITED STATES PATENT OFFICE.

THOMAS KRAEMER, OF PHILADELPHIA, PENNSYLVANIA, ASSIGNOR TO HAWTHORNE & SHEBLE MANUFACTURING COMPANY, OF PHILADELPHIA, PENNSYLVANIA, A CORPORATION OF PENNSYLVANIA.

SOUND-BOX FOR TALKING-MACHINES.

No. 890,142. Specification of Letters Patent. Patented June 9, 1908.

Application filed October 7, 1907. Serial No. 396,135.

To all whom it may concern:

Be it known that I, THOMAS KRAEMER, a citizen of the United States, residing at Philadelphia, in the county of Philadelphia and State of Pennsylvania, have invented a certain new and useful Improvement in Sound-Boxes for Talking-Machines, of which the following is a specification.

This invention relates to sound-boxes for talking machines and has reference more particularly to the construction of the diaphragms for such sound-boxes.

The object of the invention is to effect certain improvements in the construction of such diaphragms to the end that a greater volume of sound is obtained in reproducing a record and that a more faithful reproduction is obtained as a result of the elimination of false sound vibrations.

I have illustrated the preferred embodiment of my invention in the accompanying drawings, in which

Figure 1 is a front view of a sound-box, Fig. 2 is a central section of the same, and Fig. 3 is an enlarged sectional view of the diaphragm alone.

Referring to these drawings, the sound-box is show as having a main wall 1, a tubular extension 2 leading therefrom for connection to the sound-conveying tube, and a circular flange 3 at the outer edge of wall 1 forming the outer wall of the box. Fitting snugly within wall 3 is a rubber strip or ring 4, circular in cross-section, forming a support for the diaphragm 5, this ring being retained in position by a circular ridge 6 integral with and rising from the wall 1. The stylus-lever 7 is pivotally mounted upon the wall 3, bears at its inner end upon the central portion of the diaphragm, and at its outer end is provided with an opening to receive a stylus 8, the latter being held in its opening by a set-screw 9. In the present instance, I have shown the stylus-lever as provided with notched lugs 10 adapted to receive knife-edges formed on a sheet-metal piece 11 which is secured to wall 1 and whose end forms a spring 12 tending to rock the stylus-lever on its knife-edge pivot in the direction to hold its inner end against the diaphragm.

The method of mounting the diaphragm herein shown with its edge bearing on a rubber ring has proven highly efficient as the rubber absorbs counter-vibrations and thus makes the reproduced sound much more clear. The diaphragm, which is a disk of thin sheet-metal, is of a diameter but little less than the internal diameter of the circular flange 3 and when in proper position it rests upon the rubber ring 4 with its outer edge separated from the interior wall of flange 3 by a narrow space entirely around the diaphragm. It is difficult, however, to get the diaphragm in this position every time it is inserted and to retain it there during long periods of use of the sound-box and if the diaphragm becomes moved out of this position the small amount necessary to carry its edge into contact with the flange 3, the vibrations of the diaphragm will be transmitted to the sound-box and the reproduced sound will be much less clear and distinct. I therefore provide means for centering the diaphragm in position and holding it against such movement as would cause its edge to engage the wall of the box. This is accomplished by providing a circular rib 13 in the diaphragm concentric with and close to the outer edge thereof, such that when the diaphragm is in position, this rib will coact with the rubber ring 4 to obstruct movement of the diaphragm in the plane in which it lies.

In Fig. 2 of the drawings, it will be seen that the rib 13 is in coaction with the ring 4 and would preclude movement of the diaphragm in a vertical direction and that when in this position the edges of the diaphragm are separated from the wall of the sound-box. So long as the diaphragm is held in this position, the danger of transmitting the vibrations thereof to the walls of the sound-box is eliminated.

In diaphragms for sound-boxes as heretofore constructed, especially those which are flat disks, the vibrating area is small and therefore the air-pressure behind the diaphragm is also small. In accordance with my invention, I construct the diaphragm in such manner that the area of vibration is considerably increased. This is accomplished by pressing a comparatively large portion of the diaphragm at its center out of the plane thereof so that the central portion of the diaphragm swells out to one side. This is shown in Figs. 2 and 3, from which it will be seen that the center 14 of the diaphragm is displaced from the plane of the edge portion thereof. The inclined portion

15 joining the center 14 and the edge portion includes a considerable part of the total area of the diaphragm and when the stylus-lever is rocked to and fro on its pivot by the undulations of the record-groove, this entire inclined portion is caused to vibrate so that a vibrating area is obtained which is considerably larger than that obtained when a flat disk is employed as a diaphragm. This increased area of vibration results in increased air-pressure behind the diaphragm and both of these combine to give a considerably increased volume of reproduced sound.

The diaphragm above described may be pressed to the desired shape from a disk of sheet-metal and may therefore be manufactured at very low cost. A metallic button 16 is preferably secured to the center of the diaphragm on which the inner end of the stylus-lever bears.

Having now described my invention, what I claim as new therein and desire to secure by Letters Patent is as follows:—

1. The combination of a sound-box having an outer wall, a resilient member within said wall, and a diaphragm supported on said member with its edge out of contact with said wall said diaphragm having a rib therein coacting with said member to prevent movement of the diaphragm in the plane in which it lies, substantially as set forth.

2. The combination of a sound-box having an outer wall, a rubber ring within said wall, a ridge on the sound-box to retain said ring in position, and a diaphragm supported on said ring with its edge out of contact with said wall, said diaphragm having a rib therein close to its outer edge coacting with said member to prevent movement of the diaphragm in the plane in which it lies, substantially as set forth.

3. The combination of a sound-box having a wall and shaped to provide a surface within the box adjacent to said wall for supporting a diaphragm, and a diaphragm supported on said surface, said diaphragm having a rib therein coacting with a part of the box structure to preclude movement of the diaphragm in the plane in which it lies to carry its edge into engagement with said wall of the box, substantially as set forth.

This specification signed and witnessed this 30 day of Septr., 1907.

THOMAS KRAEMER.

Witnesses:
H. MEIER,
H. MUHLSCHLEGEL.

L. LUMIERE.

ACOUSTICAL INSTRUMENT.

APPLICATION FILED JUNE 30, 1909.

986,477. Patented Mar. 14, 1911.

5 SHEETS—SHEET 1.

Fig. 1.

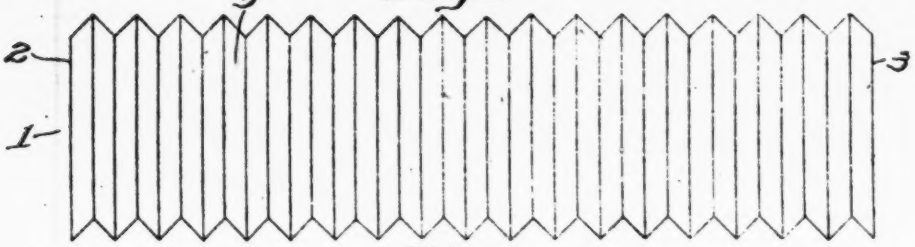

Fig. 2.

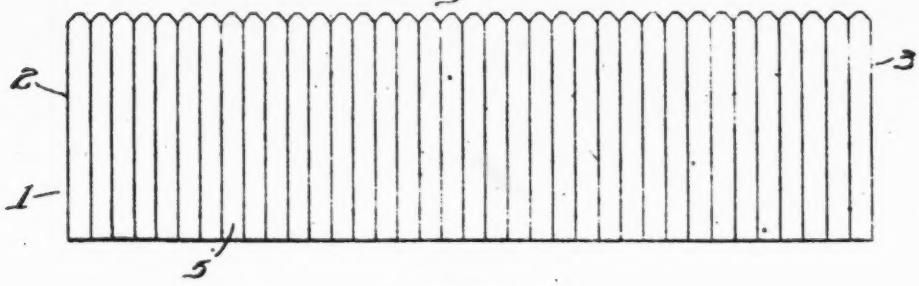

Fig. 3.

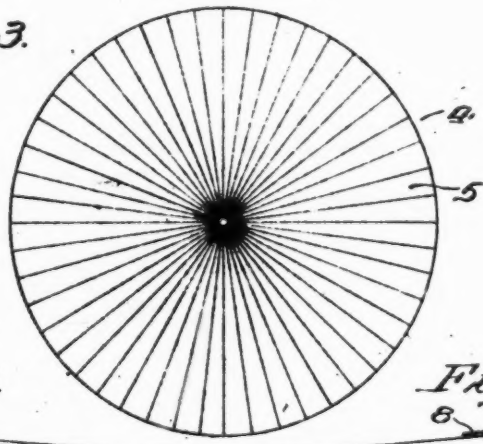

Fig. 4.

Fig. 5.

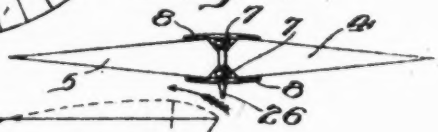

Fig. 6.

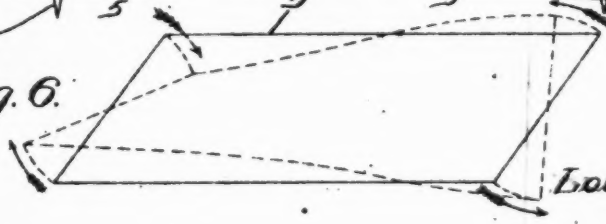

INVENTOR

Louis Lumiere

WITNESSES

H. J. Hartman.

Hexton B. Maulton

BY

ATTORNEY

L. LUMIERE.
ACOUSTICAL INSTRUMENT.
APPLICATION FILED JUNE 30, 1909.

986,477. Patented Mar. 14, 1911
5 SHEETS—SHEET 2.

Fig. 7.

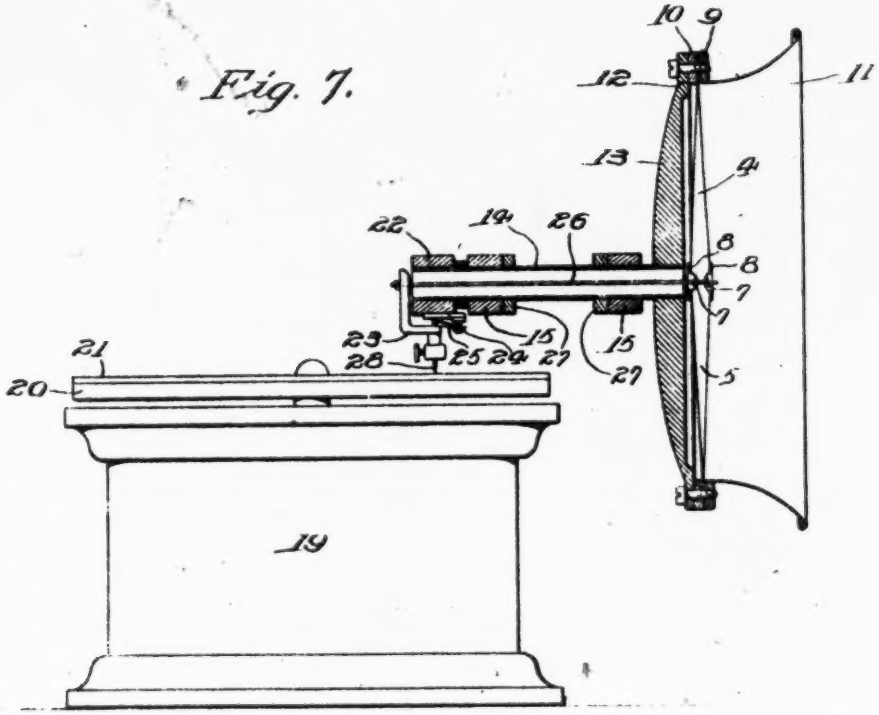

Fig. 7.a

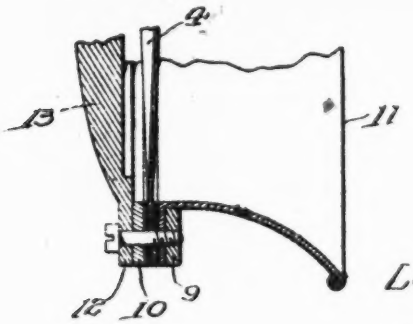

INVENTOR
Louis Lumiere.

WITNESSES
F. J. Hartman.
Alston B. Moulton

BY
Horace Pettit.
ATTORNEY

L. LUMIERE.

ACOUSTICAL INSTRUMENT.

APPLICATION FILED JUNE 30, 1909.

986,477. Patented Mar. 14, 1911.

5 SHEETS—SHEET 3.

Fig. 8.

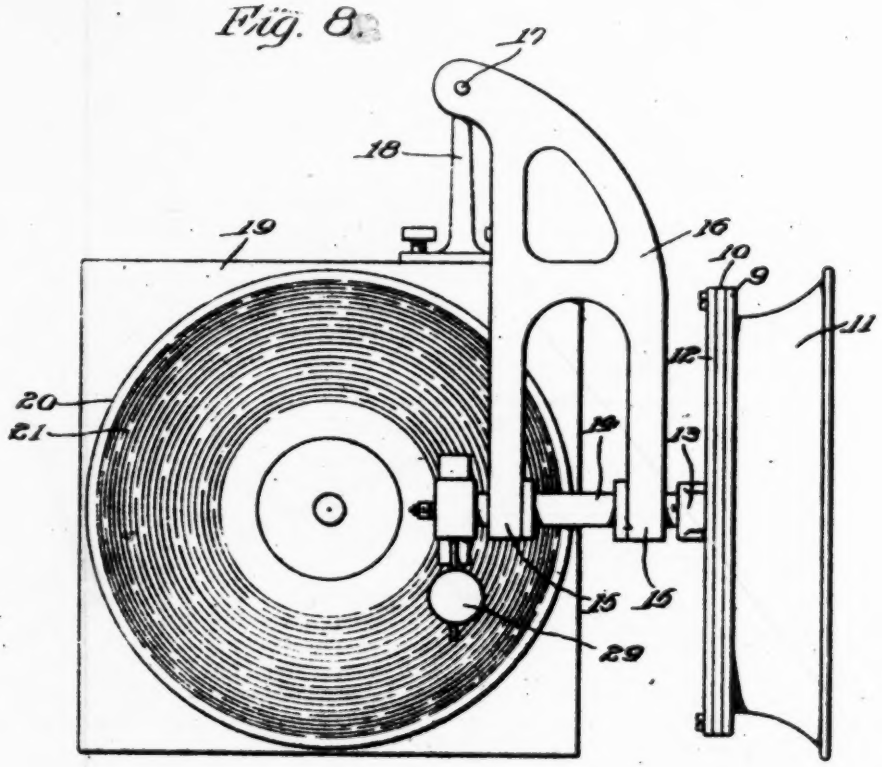

INVENTOR

Louis Lumiere.

WITNESSES

F. J. Haffmans.

BY

ATTORNEY

L. LUMIERE.
ACOUSTICAL INSTRUMENT.
APPLICATION FILED JUNE 30, 1909.

986,477. Patented Mar. 14, 1911.

5 SHEETS—SHEET 4.

Fig. 9.

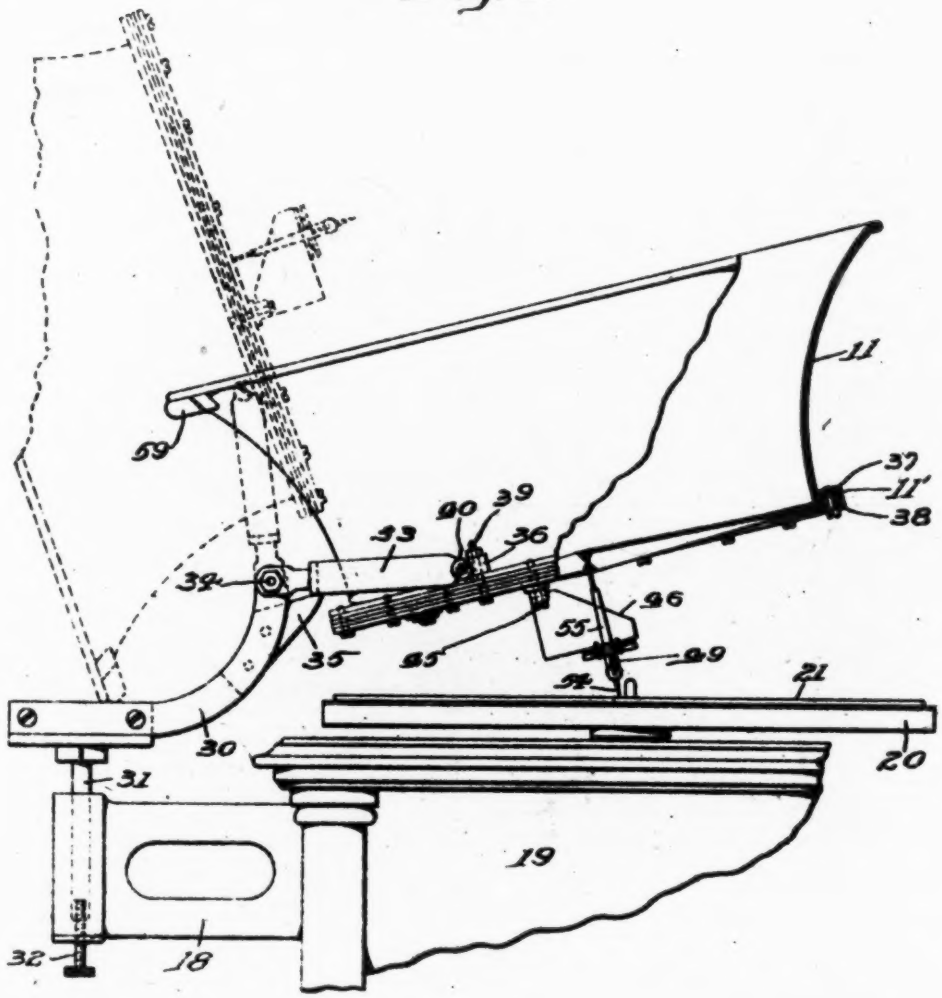

INVENTOR
Louis Lumiere

WITNESSES
F. G. Hartman.
Alston B. Moulton

BY Horace Pettit.
ATTORNEY

L. LUMIERE.

ACOUSTICAL INSTRUMENT.

APPLICATION FILED JUNE 30, 1909.

986,477. Patented Mar. 14, 1911.

5 SHEETS—SHEET 5.

Fig. 10.

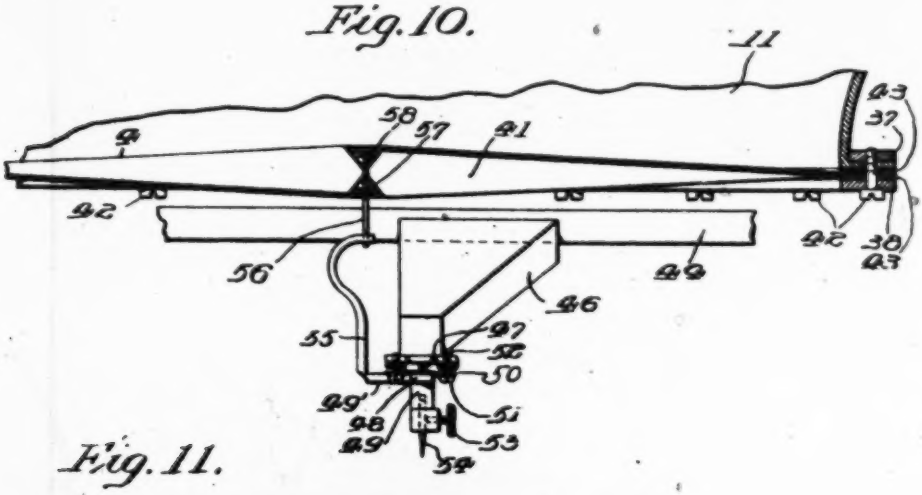

Fig. 11.

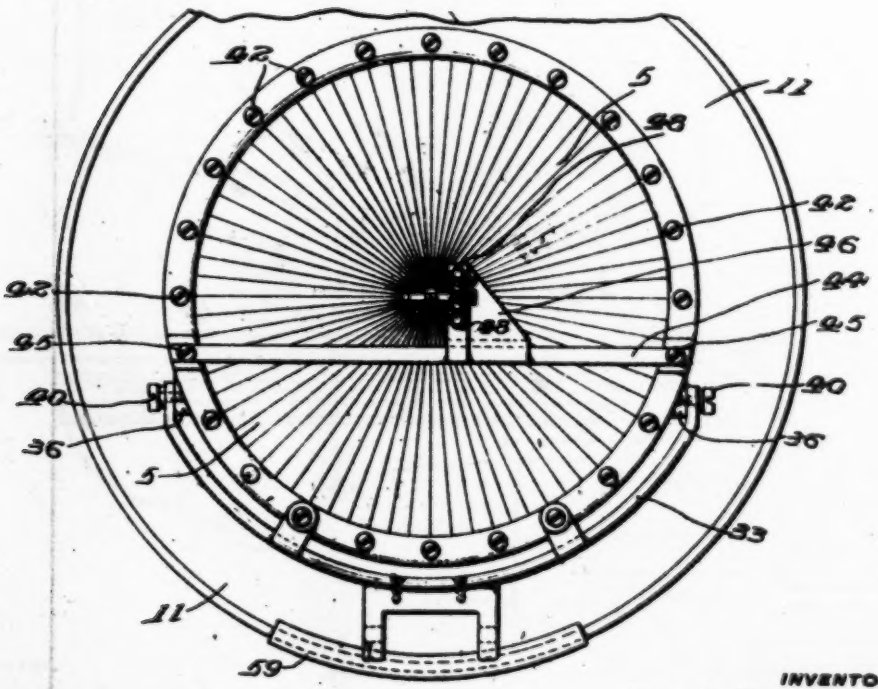

INVENTOR

Louis Lumiere.

WITNESSES

F. J. Hartman.

BY Horace Pettit.

ATTORNEY

UNITED STATES PATENT OFFICE.

LOUIS LUMIERE, OF LYON, FRANCE.

ACOUSTICAL INSTRUMENT.

986,477. Specification of Letters Patent. Patented Mar. 14, 1911.

Application filed June 30, 1909. Serial No. 505,149.

To all whom it may concern:

Be it known that I, LOUIS LUMIERE, a citizen of the Republic of France, residing at Lyon, in the Republic of France, have invented certain new and useful Improvements in Acoustical Instruments, of which the following is a full, clear, and complete disclosure.

This invention relates to improvements in acoustical instruments, such as telephones, microphones, sound recording and reproducing machines, and musical instruments in general. As applied to sound recording and reproducing apparatus, it relates more particularly to that part of the instrument which is generally known as the diaphragm, or the body which in the process of sound recording is thrown into vibration by the sound waves, and whose vibrations are traced and recorded by means of a stylus in the original record, while in the process of reproduction the diaphragm, (as a general rule, the diaphragm of a separate machine), is thrown into corresponding vibrations by a stylus to which it is attached being made to follow the undulations in the record.

The invention also relates to the sound box in which said diaphragm is mounted.

The object of my invention is to provide a diaphragm and a mounting therefor, by means of which sounds may be faithfully recorded and reproduced, which will be sensitive to sound waves and by the use of which the reproduction of sound will be improved and amplified.

Further objects of my invention are to increase the reproducing surface of a diaphragm, and, at the same time, to place the entire surface under a tension, (preferably torsional), to make it sensitive; to increase the active surface of a diaphragm of a certain given diameter; to increase the diameter of the diaphragm without making it liable to vibrate in parts, or to set up nodes or inactive portions in the diaphragm, or, in other words, to substantially increase the size of the diaphragm and, at the same time, have it vibrate throughout; to construct a diaphragm having a plurality of sound responsive elements, each of which is subjected to a molecular tension, and to subject each of a plurality of sound responsive elements to a molecular tension to increase the sensitiveness thereof and to cause them to vibrate as a whole.

Further objects of my invention will be found in the specification and claims below.

The invention consists in a diaphragm for acoustical instruments, having one or more freely resilient, sound responsive surfaces or elements, which have been brought into a condition of molecular stress, of an aggregate superficial area substantially larger than the surface of a plane disk of the same diameter, and in a recorder or reproducer in which said diaphragm is mounted.

It is found that the effect of bringing the surfaces of a vibrating body into a condition of molecular stress by torsion, is to reduce to a minimum the tendency of the vibrating body to form nodes during operation, so that the surface or surfaces of the diaphragm will vibrate as a whole and will not produce the disagreeable effect which is technically known as blasting or shattering.

One construction of diaphragm made according to this invention and the method of making it is illustrated in the accompanying drawings, in which:—

Figure 1 shows a folded strip of material from which the improved diaphragm may be made; Fig. 2 is a plan view of a modified form of folded strip of material from which a diaphragm may be made; Fig. 3 is a plan view of the diaphragm; Fig. 4 is a sectional elevation of the diaphragm; Fig. 5 is a sectional elevational view of a slightly modified form of diaphragm; Fig. 6 is a diagram to illustrate the way in which the surfaces or elements of the diaphragm are twisted; Fig. 7 is an elevation of a sound reproducing machine fitted with the diaphragm made in accordance with this invention and illustrates a convenient method of carrying the diaphragm and connecting it to the stylus bar; and Fig. 7ª is a sectional detail of Fig. 7. Fig. 8 is a plan view of the machine shown in Fig. 7; Fig. 9 is a side elevational view partly in section of a modified form of sound reproducing machine provided with my invention; Fig. 10 is an enlarged view, partly in section, of the diaphragm and stylus bar mounting shown in Fig. 9; and Fig. 11 is a bottom plan view of the reproducer shown in Fig. 9.

According to one method of carrying out this invention, a diaphragm is constructed so that it presents the form shown in Figs. 1, 3 and 4 of the accompanying drawings, in

which the whole surface of the diaphragm on either side consists of a plurality of elements reversely flexed to form a fan-like series of radially disposed ridges and furrows, the ridges on one side of the diaphragm corresponding to the furrows on the other side of the diaphragm, and the furrows gradually widening out and becoming less deep as they approach the edge of the diaphragm until at its perimeter the diaphragm lies in one plane. The elements forming the sides of the ridges and furrows provide the desired freely resilient sound responsive surfaces. A diaphragm of this form may be obtained by folding or plaiting a substantially rectangular strip of paper 1, or other suitable material in the manner shown in Fig. 1. The length of the strip of material before folding should be substantially the length of the circumference of the diaphragm to be formed therefrom, and the width of the strip should be substantially equal to the radius of the said diaphragm. When the strip has been plaited or folded in the manner above described and shown, the ends 2 and 3 should be brought together and secured to each other in any suitable manner. At this stage of the process or method, the strip will present, roughly speaking, the appearance of a cylinder having fluted sides. This strip of material is then pressed down and forced to assume the form shown in Figs. 3 and 4, one edge of the strip being crimped together at the center, and the other edge forming the perimeter; the radial ridges and furrows, or plaits being closest together and of greatest depth at the center, and gradually opening out and flattening toward the edge where the diaphragm may be held in one plane between clamping rings, as shown in Figs. 7 to 11. In Fig. 3 the diaphragm is designated as 4 and the elements forming the plaits or ridges and furrows are designated by the numeral 5. The diaphragm 4 thus formed in the manner above described will be seen to have a surface formed wholly of a multiplicity of flexed sound responsive elements, reversely sloped or angled to each other, forming dihedral ridges. The surface of the diaphragm will consist of a surface comprising salient radial angled surfaces, and radial reëntrant angled surfaces. Any sector of the surface will have a fan-like formation.

To the center of the diaphragm, is attached, in any suitable manner, the recording or reproducing stylus 6, as the case may be. As shown in Fig. 4, the diaphragm is for use with or for a record having an up and down, or vertical cut, since the diaphragm is directly provided with a stylus at its center.

For making the attachment between the stylus and diaphragm, or between the connection between the stylus and the diaphragm, I prefer to bevel off the inner edge of the diaphragm as particularly shown in Figs. 2, 9 and 10. The stylus 6 may be secured directly to the inner edges of the elements of the diaphragm by being cemented or glued thereto in the manner shown in Fig. 4, or it may be secured in place by means of nuts 7, as will be more particularly described below, in connection with the form of apparatus shown in Figs. 9 and 10 and also as shown in Fig. 5. The stylus 6 may also be surrounded by rings of stiff paper 8, secured on either side of the diaphragm at the center thereof to give it additional rigidity at that point. I do not, however, limit myself to this form of connection. The effect of constructing the diaphragm in this manner, is that the whole diaphragm, *i. e.*, the surface of each element of each ridge and furrow is under molecular stress, produced by torsion, but the sides of the ridges and furrows are twisted out of the plane in which they lie at the center of the diaphragm into a plane, practically at right angles thereto at the circumference of the diaphragm. I have further found that in a diaphragm produced by this means, the tendency of the vibrating body to form nodes during operation is reduced to a minimum. The surface of each of the elements composing this diaphragm being helicoidal, and since each point in the vibrating body, as it moves, follows a direction normal to the tangential plane at this point, the result is that the direction of movement is different for each point that has to be considered so that the formation of nodes is practically impossible. It is obvious, of course, that the same condition of molecular stress would be produced upon twisting a sheet of material which naturally possessed a helicoidal or other than plane form so as to take up a position in a true plane, or other helicoidal form of different pitch.

The diagram shown in Fig. 6, illustrates clearly the torsion which is applied to each of the multiple surfaces or elements of the diaphragm when the strip of material is made to take up the form shown in Figs. 3 and 4 from the form shown in Fig. 1. In this diagram 5′ represents a thin flat sheet of elastic material, such as is formed by each of the several folds or plaitings of the strip shown in Figs. 1 and 2. If the two ends of this sheet are turned in opposite directions, as indicated by the arrows, and are made to take up the position shown in dotted lines, it is found that a very resilient body is formed, which is capable of vibrating more readily, and is more sensitive, *i. e.*, more sound responsive in its new position than it was before. This is probably due to the molecular stress which is imparted to it by this twisting action. It will be clear that each of the

surfaces or folds 5, of the diaphragm illustrated in Figs. 3 and 4 is in the same condition of molecular stress, as the sheet 5' in Fig. 6.

The width of the folds 5, relative to the breadth of the strip in which they are made, may vary; but I have found a convenient proportion to adopt when making the diaphragm of paper is about 10 to 1, so that each fold of the strip is 10 times as long as wide.

I have found that in a diaphragm having multiple resilient surfaces such as that above described, a greatly improved reproduction can be obtained. Moreover, a diaphragm constructed in the manner above described can be usefully made of considerably greater diameter than has heretofore been possible. Experience has seemed to prove that a plane diaphragm of mica, or other material, such as is used at the present day, if made of more than about three-and-a-half inches in diameter, loses in quality of reproduction, the reproduction becoming less musical and there being a liability to what there is technically known as "shattering", due probably to the diaphragm not vibrating as a whole, *i. e.*, to the setting up of nodes in the diaphragm. I have found, however, that I am able to make a diaphragm according to the present invention, as large as ten inches or more in diameter, without impairing the quality of the reproduction, and by means of this diaphragm, I at the same time, attain a much greater volume of sound than with the smaller diaphragm. This amplification of the sound, I believe to be due, not only to the increased diameter of the diaphragm, but also to the increased surface area of the diaphragm produced in the construction above described, by the plaitings or crimpings or folds in the material of the diaphragm; this appears to have the effect of putting into motion a greater volume of air and so increasing the volume of sound.

A diaphragm having freely resilient sound responsive surfaces brought into a condition of molecular stress, preferably by torsion, and also of an aggregate area substantially larger than a plane disk of the same diameter may of course be produced in other ways than that above described. I have found, however, that the above described method is a convenient one for making the diaphragm.

The advantage arising from the use of a diaphragm constructed as above described, is that the volume of sound produced is sufficient to enable me to dispense with the usual amplifying horn, and in this way, much of the metallic and hollow character usually associated with talking machine reproductions is eliminated.

Diaphragms may be made according to this invention, of any suitable elastic material, such as paper, (which may be varnished if desired), card, celluloid, metal, or the like, and the surface, or surfaces, of the diaphragm, or elements composing the vibrating body, may be put under tension by any suitable means.

One means of mounting the stylus bar and diaphragm in an operative position particularly for use with a record having a record of sound in the form of a groove having lateral undulations in the walls thereof is shown in Figs. 7 and 8. In this case, the diaphragm 4 is held at the edges by clamping rings 9 and 10, and, to the front ring 9, may be secured a small trumpet 11 for directing the sound waves. The clamping ring 10 is fixed to a suitable backing ring 12, having radial arms 13 by which the same is carried by a tube 14 which is capable of turning freely in the bearings 15—15, of the swinging arm 16, pivoted at 17 upon a rigid bracket 18, fixed to the cabinet 19. The cabinet 19 is provided with a suitable mechanism for rotating the turn-table 20 upon which a record 21 is carried in the usual manner.

The tube 14 is provided at one end with a mounting 22 freely rotatable upon said tube 14, but prevented in any suitable manner, from longitudinal movement upon the tube 14. This mounting 22 carries a stylus bar 23 which may be mounted thereon in any suitable manner, as by being pivoted on the knife edges 24, and retained on said knife edge bearings by a spring 25, in the usual manner. The upper end of the stylus bar 23 is connected by a rod 26 with the diaphragm 5, the rod 26 being connected or attached to the diaphragm by nuts 7 in the manner shown in Fig. 5. In this construction as shown in Figs. 7 and 8, the diaphragm is preferably made from a sheet of material such as is shown in Fig. 2 of the drawings so as to provide a suitable recess on each side of the diaphragm, in which the nuts 7 are seated. These nuts may be further cemented or otherwise secured to the diaphragm. In the said figures the diaphragm is also shown as being provided with a stiffening ring 8 at the center of the diaphragm and surrounding the stylus bar connection 26. Suitable nuts or collars 27 may be employed for holding the tube 14 from lengthwise movement in the bearings 15.

As the stylus 28 follows the record groove, the arm 16 will swing across the record on the pivot 17, and the mounting 22, carrying the stylus bar 23, will oscillate around the tube 14 with any unevenness in the rotation of the record. A suitable weight 29 may be attached to the mounting 22, to cause the stylus to engage the record with the requisite amount of pressure.

In Figs. 9, 10 and 11, I have illustrated a further modification of the way in which

my diaphragm may be used in connection with a sound reproducing machine. In said figures, the record 21 is supported upon and rotated by a turn-table 20 driven by any suitable motor within the casing 19, and the cabinet is provided with a bracket 18 similar to the arrangement above described in connection with Figs. 7 and 8. An arm 30 is mounted upon a steam or pintle 31 to swing on said bracket in a plane substantially parallel with the plane of the record 21. The bracket 18 may be provided with a vertically adjustable step 32 for the end of the stem 31, which, in the form illustrated in Fig. 9, consists of a screw threaded into the bracket 18, and against which the end of the stem or pintle 31 rests. By this means, the arm 30 may be raised or lowered to adjust the parts carried thereby with respect to the record 21 on the turn-table 20, to set the stylus at the proper angle to the record surface. The free end of the arm 30 carries a yoke 33 pivoted to the said arm by a bolt or pin 34, so as to be capable of swinging in a plane substantially perpendicular to the plane of the record. The said arm 30 is provided with a stop 35, which prevents the yoke from swinging downwardly beyond a predetermined point. The outer ends of the yoke 33 are secured to lugs 36 bolted to the rings 37, 38, by bolts 39, passing through said rings and said lug. Screws 40, passing through the ends of the yoke 33 and into the lugs 36, form the pivots to permit the rings and the parts carried thereby, to oscillate thereon. The diaphragm 41 is of the kind which I have described above; that is to say, the diaphragm is formed by reversely folding a sheet of material to form plaits, each plait forming an element of the diaphragm, and each of these plaits or elements is subjected to a torsional tension or strain by the bringing of the folded or plaited sheet of material into a substantially circular form. In these Figs. 9 to 11, the diaphragm is shown practically as being formed from a sheet of material such as is shown in Fig. 2; that is to say, a strip in which each plait is cut away at its inner corners so as to form a recess on each side of the center of the diaphragm to permit of a convenient attachment of the stylus bar to the diaphragm. As is plainly shown in Fig. 10, the diaphragm 41 is clamped between the rings 37 and 38, and securely held in that position by means of the screws 42 passing through the said rings and drawing them together. I prefer, however, to interpose, between the rings 37 and 38, and the diaphragm, thin rings 43—43 of a suitable non-metallic and preferably slightly elastic material, one on each side of the diaphragm. These rings 43, may be of fabric, or rubber, or fiber, or any other suitable material to prevent an actual contact between the diaphragm and the metallic rings 37 and 38, and to securely hold the periphery of the diaphragm in a single plane. A suitable small trumpet 11 may be also secured between the rings for the purpose of directing the sound waves. I have shown it plainly in Figs. 9 and 10 as composed of a slightly flaring substantially conical member having a flange 11′ clamped between the rings 37 and 38, the screws 42 passing therethrough. The periphery of the diaphragm 41 is clamped between the intermediate rings 43, and held thereby in a single plane as plainly shown in Fig. 10.

The bottom of the reproducer is provided with a suitable support for the stylus bar, said support comprising a bar 44 secured to the ring 38 by screws 45, or in any other suitable manner. The said bar 44 may carry a block 46 rigidly secured thereto and upon the lower side of said block, I mount the stylus bar. Any suitable mounting for the stylus bar may be employed, but in the said modification illustrated in Figs. 9 to 11, I have shown the block 46 as provided with a pair of alined knife edges 47 engaging suitable recesses and lateral extensions 48 of the stylus bar 49. Each lateral extension is provided with a spring 50, one end of which is attached to said extension 48, and the other end of which extends outwardly and is provided with a hole through which a screw 51 passes, the head of the screw engaging the end of said spring 50 and the screw being threaded in a suitable tapped plate 52 carried by the said block 46. In this way the stylus bar is yieldingly held upon the knife edges 47, but is free to oscillate upon them as bearings. The lower end of the stylus bar is provided with a suitable set screw 53 for securing the stylus 54 in the socket therein. The stylus bar 49 may have a portion 49′ extending at an angle to the stylus-carrying portion and it may then extend upwardly as at 55 to this point of attachment to the center of the diaphragm. I have shown the said upwardly extending portion 55 as being curved in order to make it slightly yielding, and the point between the portions 49′ and 55 as being materially weakened to enable the stylus bar to readily bend or spring or give slightly at this point to transform the vibratory movement of the stylus into a reciprocatory movement of the portion 55 which is directly attached to and consequently communicates its motion to the center of the diaphragm.

In adjusting the reproducer to the recorded surface, the arm 30 should be set at such a height that the stylus will be given a slight rake to the recorded surface, as plainly shown in Fig. 9. This will permit the record to slide freely beneath the stylus without unduly scratching the same and cause the stylus to engage the record with

a sufficient pressure to insure the tracking of the stylus in the record groove. The record may then slide freely beneath the stylus, and the whole reproducer may swing slightly on the bolts or pins 40 to allow for any irregularity or unevenness or warp in the recorded surface.

In order that the stylus may not bear too heavily upon the record, the trumpet 11 may be provided with a suitable counter-balance-weight 59.

From the preceding description it will be plain that the whole construction is such that the trumpet, diaphragm, rings and stylus attached thereto may be swung upwardly about the bolts or pin 34 as a pivot for the purpose of replacing the stylus or for throwing the whole device into an inoperative position, as indicated in dotted lines in Fig. 9.

In operation it will be apparent that when the record is given a rotary movement from the turn-table 20 and the stylus 54 engages the record 21, the whole reproducer will swing about the stem or pintle 31 as a pivot allowing the needle or stylus 54 to track across the record and the stylus will be caused to assume the correct angle to the recorded surface by the adjustment of the step 32 against which the stem or pintle 31 abuts, and further, that the stylus will be prevented from bearing too heavily upon the record by the counter-weight 59 attached to the upper end of the trumpet 11.

In all the forms which I have above described, it will be seen that the diaphragm is constructed upon the same principle, and that it is mounted in substantially the same manner, and that any suitable manner of securing the stylus to the center of the diaphragm may be employed, and while I have shown a small trumpet 11 in connection with the constructions which I have illustrated, it is to be understood that the trumpet may be entirely dispensed with if desired, the function being to give direction to the sound waves rather than to increase the volume of the sound reproduced by the diaphragm.

Having thus described my invention, what I claim and desire to protect by Letters Patent of the United States, is:—

1. The method of making a diaphragm which consists in plaiting a strip of suitable material, joining the ends of the plaited material and bringing the same to a circular shape to form a diaphragm in which each of the plaits forms an element subjected to torsional tension.

2. The method of making a diaphragm which consists in plaiting a strip of flexible material, joining the ends of the plaited material and subjecting each of the plaits to a torsional tension.

3. The method of making a diaphragm which consists in reversely folding a strip of flexible material into a series of plaits, removing a corner of each of said strips, bringing the ends of said plaited material together and forming the same into a substantially circular shape having radial salient and reëntrant angles.

4. The method of making a diaphragm which consists in reversely folding a strip of flexible material, twisting the folded sheet into substantially circular shape and rigidly holding the edges of the diaphragm so formed in a single plane.

5. The method of forming a diaphragm, which consists in plaiting a substantially rectangular strip of material, removing a corner of each plait on one side of the strip, uniting the ends of the strip and forming the said material into a substantially circular diaphragm, each of the plaits forming an element of the diaphragm with its edge at the center of the diaphragm substantially parallel to the axis of the diaphragm and the edge of each plait at the periphery of the diaphragm being brought to substantially a single plane.

6. The method of forming a diaphragm, which consists in plaiting a substantially rectangular strip of material, uniting the ends of the strip and forming the said material into a substantially circular diaphragm, each of the plaits forming an element of the diaphragm with its edge at the center of the diaphragm substantially parallel to the axis of the diaphragm, the edge of each plait at the periphery of the diaphragm being brought to substantially a single plane, and securing an annular strip of stiffening to the edges of the elements adjacent the center of the diaphragm.

In witness whereof I have hereunto set my hand this fourth day of June, A. D. 1909.

LOUIS LUMIERE.

Witnesses:
L. N. Reddie,
A. J. Cooley.

Corrections in Letters Patent No. 986,477

It is hereby certified that in Letters Patent No. 986,477, granted March 14, 1911, upon the application of Louis Lumiere, of Lyon, France, for an improvement in "Acoustical Instruments," errors appear in the printed specification requiring correction as follows: Page 4, line 9, the word "steam" should read *stem*, and same page, line 100, the word "suitable" should read *suitably;* and that the said Letters Patent should be read with these corrections therein that the same may conform to the record of the case in the Patent Office.

Signed and sealed this 11th day of April, A. D., 1911.

[SEAL.]

C. C. BILLINGS.

Acting Commissioner of Patents.

L. LUMIERE.

ACOUSTICAL INSTRUMENT.

APPLICATION FILED MAR. 26, 1910.

1,036,529. Patented Aug. 20, 1912.

5 SHEETS—SHEET 1.

Fig. 1.

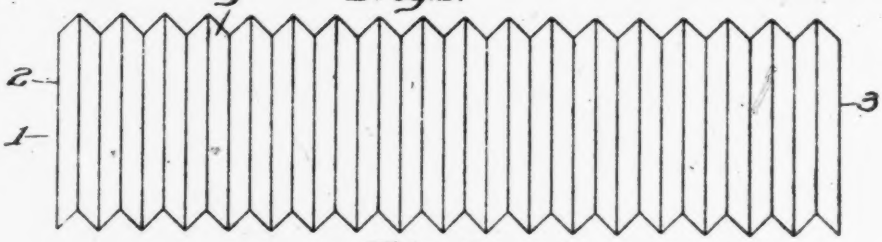

Fig. 2.

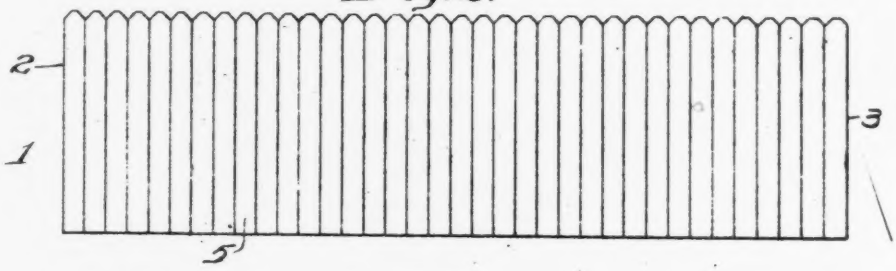

Fig. 3.

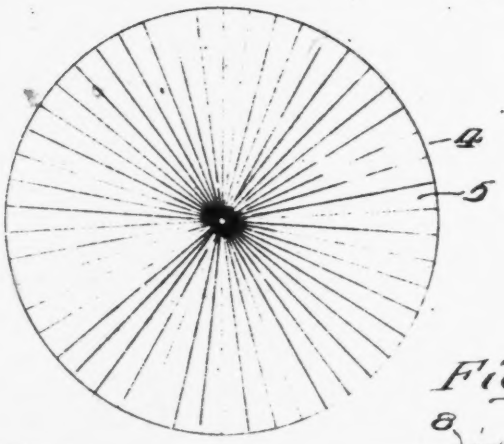

Fig. 4.

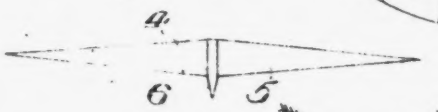

Fig. 5.

Fig. 6.

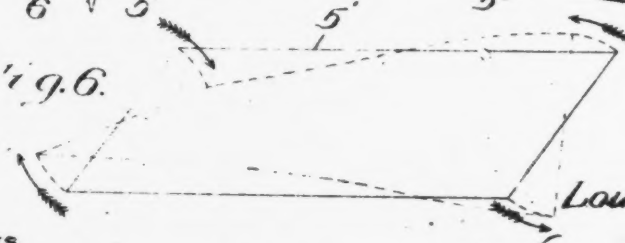

INVENTOR

Louis Lumiere.

WITNESSES

F. J. Hartman.

J. Henderson

BY Horace Pelle

ATTORNEY

L. LUMIERE.

ACOUSTICAL INSTRUMENT.

APPLICATION FILED MAR. 26, 1910.

1,036,529.

Patented Aug. 20, 1912.

5 SHEETS—SHEET 2.

Fig. 7.

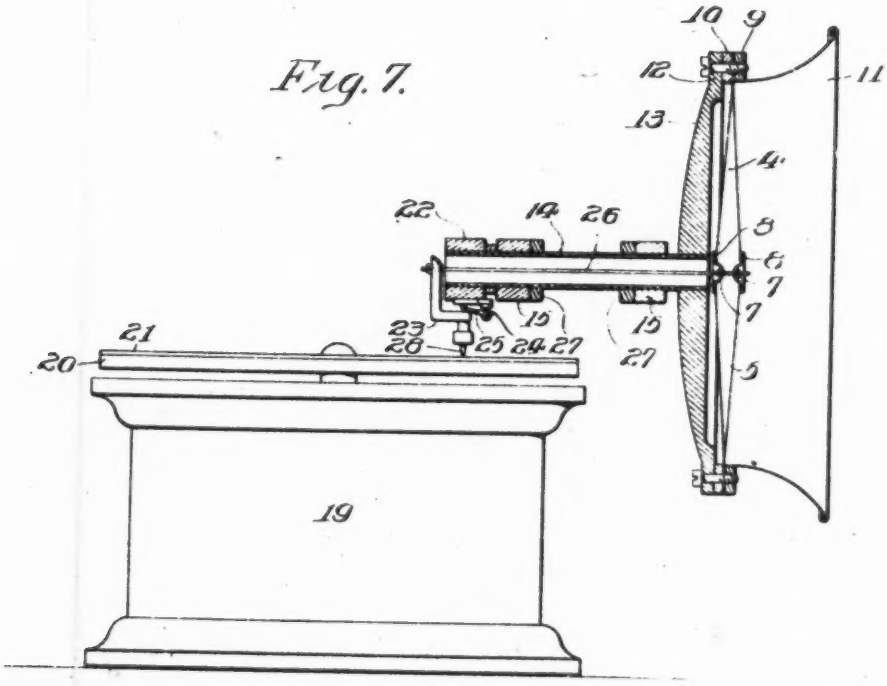

Fig. 7.a

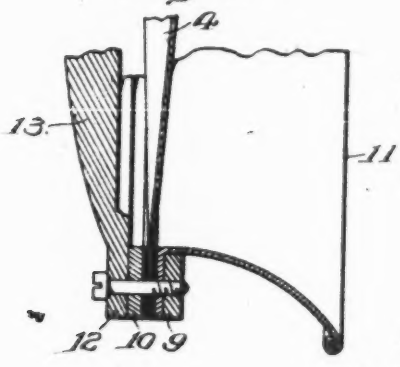

WITNESSES

F. J. Hastmann

J. Kendrum

INVENTOR

Louis Lumiere.

BY Horace Colby

ATTORNEY

L. LUMIERE.

ACOUSTICAL INSTRUMENT.

APPLICATION FILED MAR. 26, 1910.

1,036,529.

Patented Aug. 20, 1912.

5 SHEETS—SHEET 3.

Fig. 8.

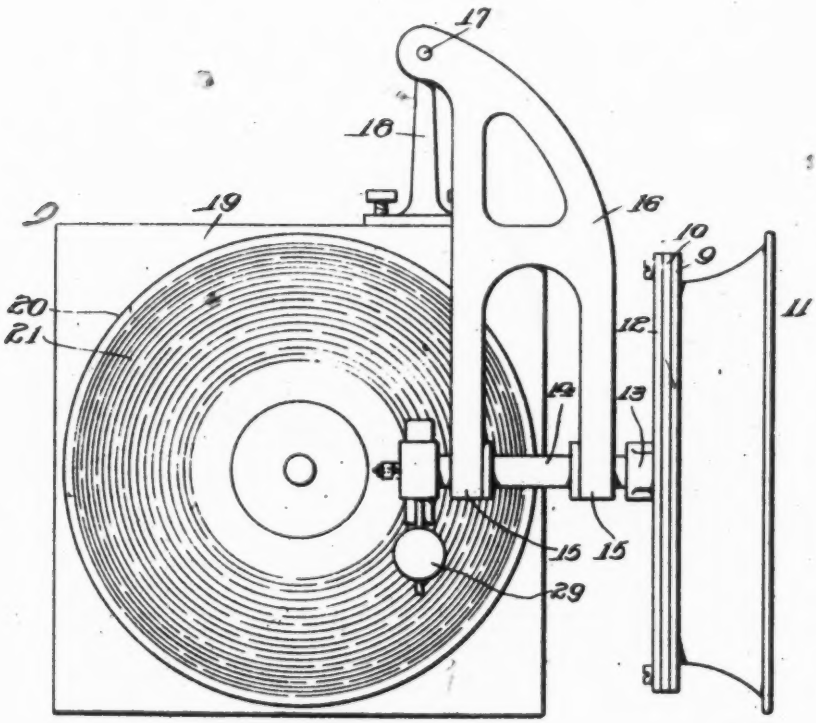

INVENTOR

Louis Lumiere

WITNESSES

F. J. Hartman

J. Henderson

BY

ATTORNEY

L. LUMIERE.
ACOUSTICAL INSTRUMENT.
APPLICATION FILED MAR. 26, 1910.

1,036,529.

Patented Aug. 20, 1912.
5 SHEETS—SHEET 4.

Fig. 9.

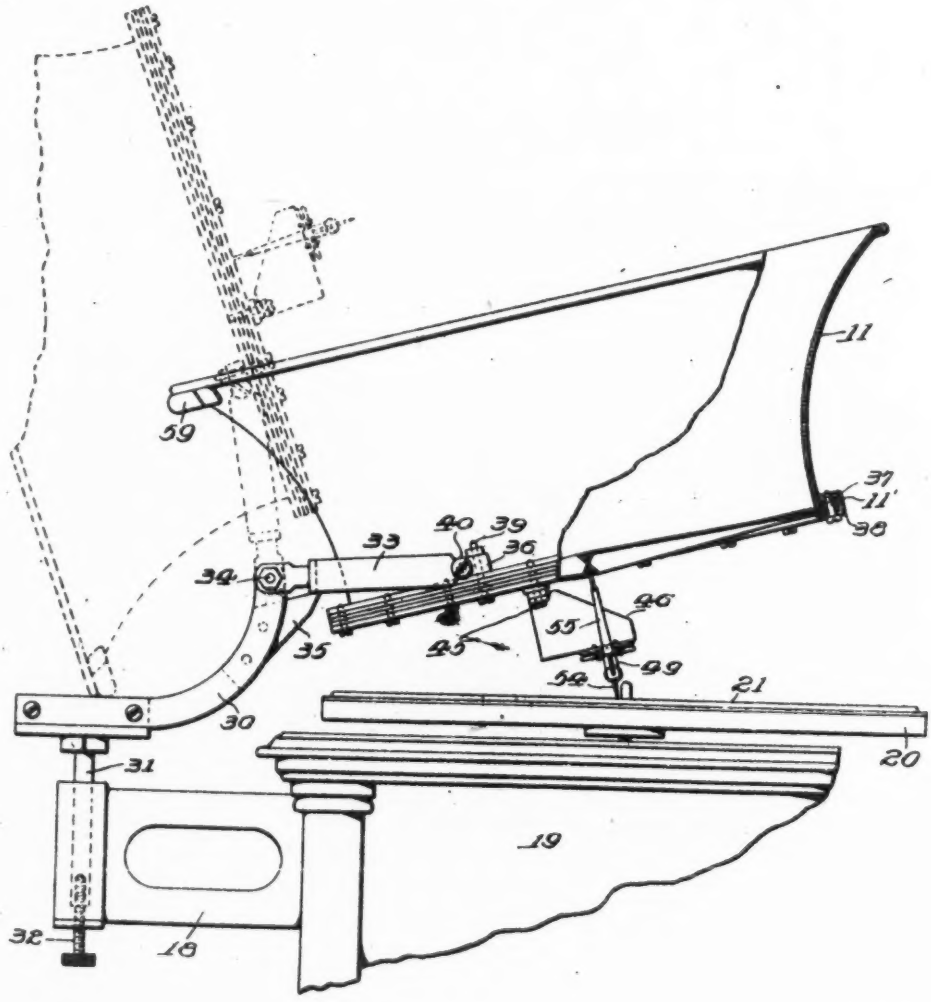

INVENTOR
Louis Lumiere.

WITNESSES
F. J. Hartman.
J. Henderson

BY Horace Pettit

ATTORNEY

L. LUMIERE.

ACOUSTICAL INSTRUMENT.

APPLICATION FILED MAR. 26, 1910.

1,036,529.

Patented Aug. 20, 1912.

5 SHEETS—SHEET 5

Fig. 10.

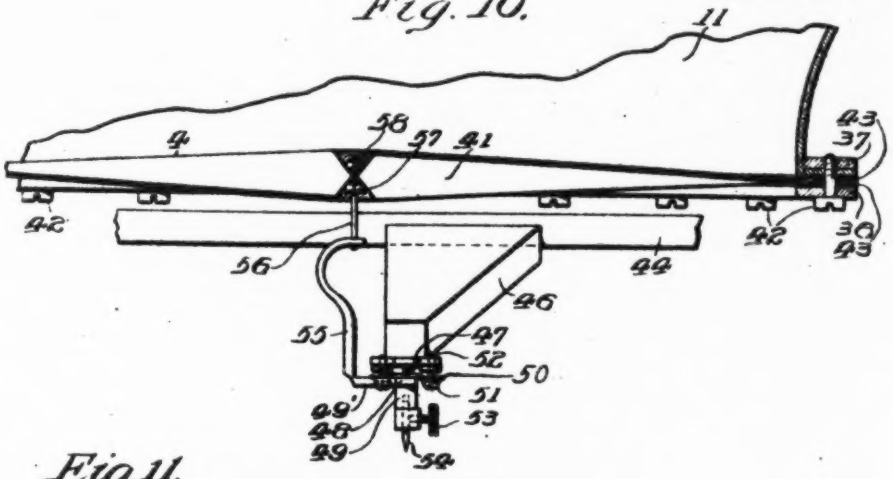

Fig. 11.

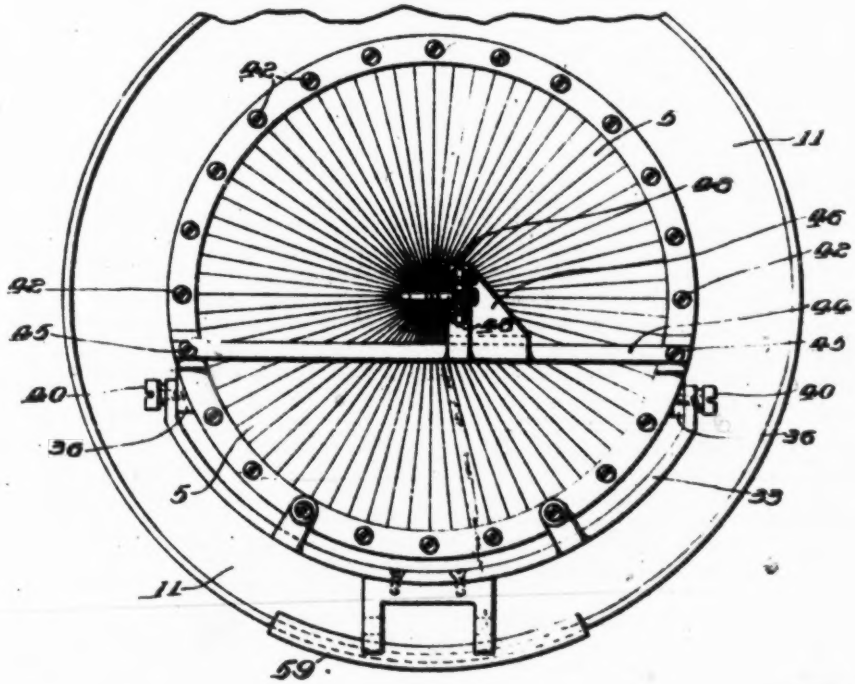

INVENTOR

Louis Lumiere.

WITNESSES

A. J. Hautman.

J. Henderson

BY Horace Pettijohn

ATTORNEY

UNITED STATES PATENT OFFICE.

LOUIS LUMIERE, OF LYON, FRANCE, ASSIGNOR TO VICTOR TALKING MACHINE COMPANY, OF CAMDEN, NEW JERSEY, A CORPORATION OF NEW JERSEY.

ACOUSTICAL INSTRUMENT.

1,036,529. Specification of Letters Patent. Patented Aug. 20, 1912.

Original application filed June 30, 1909, Serial No. 505,149. Divided and this application filed March 26, 1910. Serial No. 551,638.

To all whom it may concern:

Be it known that I, LOUIS LUMIERE, a citizen of the Republic of France, residing at Lyon, in the Republic of France, have invented certain new and useful Improvements in Acoustical Instruments, of which the following is a full, clear, and complete disclosure.

This invention relates to improvements in acoustical instruments, such as telephones, microphones, sound recording and reproducing machines, and musical instruments in general, and the present application is a division of an application filed by me June 30, 1909, Serial Number 505,149.

As applied to sound recording and reproducing apparatus, my invention relates more particularly to that part of the instrument which is generally known as the diaphragm, or the body which in the process of sound recording is thrown into vibration by the sound waves, and the vibrations of which are traced and recorded by means of a stylus in the original record, while in the process of reproduction the diaphragm, (as a general rule, the diaphragm of a separate machine) is thrown into corresponding vibrations by a stylus to which it is attached, being made to follow the undulations in the record.

My invention also relates to the sound box in which said diaphragm is mounted.

The object of my invention is to provide a diaphragm and a mounting therefor, by means of which sounds may be faithfully recorded and reproduced, which will be sensitive to sound waves and by the use of which the reproduction of sound will be improved and amplified.

Further objects of my invention are to increase the reproducing surface of a diaphragm, and, at the same time, to place the entire surface under a tension, (preferably torsional), to make it sensitive; to increase the active surface of a diaphragm of a certain given diameter; to increase the diameter of the diaphragm without making it liable to vibrate in parts, or to set up nodes or inactive portions in the diaphragm, or, in other words, to substantially increase the size of the diaphragm and, at the same time, have it vibrate throughout; to construct a diaphragm having a plurality of sound responsive elements, each of which is subjected to a molecular tension, and to subject each of a plurality of sound responsive elements to a molecular tension to increase the sensitiveness thereof and to cause them to vibrate as a whole.

Further objects of my invention will be found in the specification and claims below.

The invention consists in a diaphragm for acoustical instruments, having one or more freely resilient, sound responsive surfaces or elements, which have been brought into a condition of molecular stress, of an aggregate superficial area substantially larger than the surface of a plane disk of the same diameter, and in a recorder or reproducer in which said diaphragm is mounted.

It is found that the effect of bringing the surfaces of a vibrating body into a condition of molecular stress by torsion, is to reduce to a minimum the tendency of the vibrating body to form nodes during operation, so that the surface or surfaces of the diaphragm will vibrate as a whole and will not produce the disagreeable effect which is technically known as blasting or shattering.

One construction of diaphragm made according to this invention and the method of making it is illustrated in the accompanying drawings, in which:—

Figure 1 shows a folded strip of material from which the improved diaphragm may be made; Fig. 2 is a plan view of a modified form of folded strip of material from which a diaphragm may be made; Fig. 3 is a plan view of the diaphragm; Fig. 4 is a sectional elevation of the diaphragm; Fig. 5 is a sectional elevational view of a slightly modified form of diaphragm; Fig. 6 is a diagram to illustrate the way in which the surfaces or elements of the diaphragm are twisted; Fig. 7 is an elevation of a sound reproducing machine fitted with the diaphragm made in accordance with this invention and illustrates a convenient method of carrying the diaphragm and connecting it to the stylus bar; and Fig. 7ª is a sectional detail portion of Fig. 7. Fig. 8 is a plan view of the machine shown in Fig. 7; Fig. 9 is a side elevational view partly in section of a modified form of sound reproducing machine provided with my invention. Fig.

10 is an enlarged view, partly in section, of the diaphragm and stylus bar mounting shown in Fig. 9; and Fig. 11 is a bottom plan view of the reproducer shown in Fig. 9.

According to one method of carrying out this invention, a diaphragm is constructed so that it represents the form shown in Figs. 1, 3 and 4 of the accompanying drawings, in which the whole surface of the diaphragm on either side consists of a plurality of elements reversely flexed to form a fan-like series of radially disposed ridges and furrows, the ridges on one side of the diaphragm corresponding to the furrows on the other side of the diaphragm, and the furrows gradually widening out and becoming less deep as they approach the edge of the diaphragm until at its perimeter the diaphragm lies in one plane. The elements forming the sides of the ridges and furrows provide the desired freely resilient sound responsive surfaces. A diaphragm of this form may be obtained by folding or plaiting a substantially rectangular strip of paper 1, or other suitable material in the manner shown in Fig. 1. The length of the strip of material before folding should be substantially the length of the circumference of the diaphragm to be formed therefrom, and the width of the strip should be substantially equal to the radius of the said diaphragm. When the strip has been plaited or folded in the manner above described and shown, the ends 2 and 3 should be brought together and secured to each other in any suitable manner. At this stage of the process or method, the strip will present, roughly speaking, the appearance of a cylinder having fluted sides. This strip of material is then pressed down and forced to assume the form shown in Figs. 3 and 4, one edge of the strip being crimped together at the center, and the other edge forming the perimeter; the radial ridges and furrows, or plaits being closest together and of greatest depth at the center, and gradually opening out and flattening toward the edge where the diaphragm may be held in one plane between clamping rings, as shown in Figs. 7 to 11. In Fig. 3 the diaphragm is designated as 4 and the elements forming the plaits or ridges and furrows are designated by the numeral 5. The diaphragm 4 thus formed in the manner above described will be seen to have a surface formed wholly of a multiplicity of flexed sound responsive elements, reversely sloped or angled to each other, forming dihedral ridges. The surface of the diaphragm will consist of a surface comprising salient radial angled surfaces, and radial reëntrant angled surfaces. Any sector of the surface will have a fan-like formation. To the center of the diaphragm, is attached, in any suitable manner, the recording or reproducing stylus 6, as the case may be. As shown in Fig. 4, the diaphragm is for use with or for a record having an up and down, or vertical cut, since the diaphragm is directly provided with a stylus at its center. For making the attachment between the stylus and diaphragm, or between the connection between the stylus and the diaphragm, I prefer to bevel off the inner edge of the diaphragm as particularly shown in Figs. 2, 9 and 10. The stylus 6 may be secured directly to the inner edges of the elements of the diaphragm by being cemented or glued thereto in the manner shown in Fig. 4, or it may be secured in place by means of nuts 7, as will be more particularly described below, in connection with the form of apparatus shown in Figs. 5, 9 and 10. The stylus 6 may also be surrounded by rings of stiff paper 8, secured on either side of the diaphragm at the center thereof to give it additional rigidity at that point. I do not, however, limit myself to this form of connection. The effect of constructing the diaphragm in this manner, is that the whole diaphragm, *i. e.*, the surface of each element of each ridge and furrow is under molecular stress, produced by torsion, but the sides of the ridges and furrows are twisted out of the plane in which they lie at the center of the diaphragm into a plane, practically at right angles thereto, at the circumference of the diaphragm. I have further found that in a diaphragm produced by this means, the tendency of the vibrating body to form nodes during operation is reduced to a minimum. The surface of each of the elements composing this diaphragm being helicoidal, and since each point in the vibrating body, as it moves, follows a direction normal to the tangential plane at this point the result is that the direction of movement is different for each point that has to be considered so that the formation of nodes is practically impossible. It is obvious, of course, that the same condition of molecular stress would be produced upon twisting a sheet of material which naturally possessed a helicoidal, or other than plane, form so as to take up a position in a true plane, or other helicoidal form of different pitch.

The diagram shown in Fig. 6, illustrates clearly the torsion which is applied to each of the multiple surfaces or elements of the diaphragm when the strip of material is made to take up the form shown in Figs. 3 and 4 from the form shown in Fig. 1. In this diagram 5′ represents a thin flat sheet of elastic material, such as is formed by each of the several folds or plaitings of the strip shown in Figs. 1 and 2. If the two ends of this sheet are turned in opposite directions, as indicated by the arrows, and is made to take up the position shown in dotted lines, it is found that a very resilient body is

formed, which is capable of vibrating more readily, and is more sensitive, *i. e.*, more sound responsive in its new position than it was before. This is probably due to the molecular stress which is imparted to it by this twisting action.

It will be clear that each of the surfaces or folds 5, of the diaphragm illustrated in Figs. 3 and 4 is in the same condition of molecular stress, as the sheet 5′ in Fig. 6.

The width of the folds 5, relative to the breadth of the strip in which they are made, may vary; but I have found a convenient proportion to adopt when making the diaphragm of paper is about 10 to 1, so that each fold of the strip is 10 times as long as wide.

I have found that in a diaphragm having multiple resilient surfaces such as that above described, a greatly improved reproduction can be obtained. Moreover, a diaphragm constructed in the manner above described can be usefully made of considerably greater diameter than has heretofore been possible. Experience has seemed to prove that a plane diaphragm of mica, or other material, such as is used at the present day, if made of more than about three-and-a-half inches in diameter, loses in quality of reproduction, the reproduction becoming less musical and there being a liability to what there is technically known as "shattering," due probably to the diaphragm not vibrating as a whole, *i. e.*, to the setting up of nodes in the diaphragm. I have found, however, that I am able to make a diaphragm according to the present invention, as large as ten inches or more in diameter, without impairing the quality of the reproduction, and by means of this diaphragm, I at the same time, attain a much greater volume of sound than with the smaller diaphragm. This amplification of the sound, I believe to be due, not only to the increased diameter of the diaphragm, but also to the increased surface area of the diaphragm produced in the construction above described, by the plaitings or crimpings or folds in the material of the diaphragm; this appears to have the effect of putting into motion a greater volume of air and so increasing the volume of sound.

A diaphragm having freely resilient sound responsive surfaces brought into a condition of molecular stress, preferably by torsion; and also of an aggregate area substantially larger than a plane disk of the same diameter may of course be produced in other ways than that above described. I have found, however, that the above described method is a convenient one for making the diaphragm.

The advantage arising from the use of a diaphragm constructed as above described, is that the volume of sound produced is sufficient to enable me to dispense with the usual amplifying horn, and in this way, much of the metallic and hollow character usually associated with talking machine reproductions is eliminated.

Diaphragms may be made according to this invention, of any suitable elastic material, such as paper, (which may be varnished if desired), card, celluloid, metal, or the like, and the surface, or surfaces, of the diaphragm, or elements composing the vibrating body, may be put under tension by any suitable means.

One means of mounting the stylus bar and diaphragm in an operative position particularly for use with a record having a record of sound in the form of a groove having lateral undulations in the walls thereof is shown in Figs. 7 and 8. In this case, the diaphragm 4 is held at the edges by clamping rings 9 and 10, and, to the front ring 9, may be secured a small trumpet 11 for directing the sound waves. The clamping ring 10 is fixed to a suitable backing ring 12, having radial arms 13 by which the same is carried by a tube 14 which is capable of turning freely in the bearings 15—15, of the swinging arm 16, pivoted at 17 upon a rigid bracket 18, fixed to the cabinet 19. The cabinet 19 is provided with a suitable mechanism for rotating the turntable 20 upon which a record 21 is carried in the usual manner. The tube 14 is provided at one end with a mounting 22 freely rotatable upon said tube 14, but prevented in any suitable manner, from longitudinal movement upon the tube 14. This mounting 22 carries a stylus bar 23 which may be mounted thereon in any suitable manner, as by being pivoted on the knife edges 24, and retained on said knife edge bearings by a spring 25, in the usual manner. The upper end of the stylus bar 23 is connected by a rod 26 with the diaphragm 5, the rod 26 being connected or attached to the diaphragm by nuts 7 in the manner shown in Fig. 5. In this construction as shown in Figs. 7 and 8, the diaphragm is preferably made from a sheet of material such as is shown in Fig. 2 of the drawings so as to provide a suitable recess on each side of the diaphragm, in which the nuts 7 are seated. These nuts may be further cemented or otherwise secured to the diaphragm. In the said figures the diaphragm is also shown as being provided with a stiffening ring 8 at the center of the diaphragm and surrounding the stylus bar connection 26. Suitable nuts or collars 27 may be employed for holding the tube 14 from lengthwise movement in the bearings 15.

As the stylus 28 follows the record groove, the arm 16 will swing across the record on the pivot 17, and the mounting 22, carrying the stylus bar 23, will oscillate around the

tube 14 with any unevenness in the rotation of the record. A suitable weight 29 may be attached to the mounting 22, to cause the stylus to engage the record with the requisite amount of pressure.

In Figs. 9, 10 and 11, I have illustrated a further modification of the way in which my diaphragm may be used in connection with a sound reproducing machine. In said figures, the record 21 is supported upon and rotated by a turn-table 20 driven by any suitable motor within the casing 19, and the cabinet is provided with a bracket 18 similar to the arrangement above described in connection with Figs. 7 and 8. An arm 30 is mounted upon a stem or pintle 31 to swing on said bracket in a plane substantially parallel with the plane of the record 21. The bracket 18 may be provided with a vertically adjustable stop 32 for the end of the stem 31, which, in the form illustrated in Fig. 9, consists of a screw threaded into the bracket 18, and against which the end of the stem or pintle 31 rests. By this means, the arm 30 may be raised or lowered to adjust the parts carried thereby with respect to the record 21 on the turn-table 20, to set the stylus at the proper angle to the record surface. The free end of the arm 30 carries a yoke 33 pivoted to the said arm by a bolt or pin 34, so as to be capable of swinging in a plane substantially perpendicular to the plane of the record. The said arm 30 is provided with a stop 35, which prevents the yoke from swinging downwardly beyond a predetermined point. The outer ends of the yoke 33 are secured to lugs 36 bolted to the rings 37, 38, by bolts 39, passing through said rings and said lug. Screws 40, passing through the ends of the yoke 33 and into the lugs 36, form the pivots to permit the rings and the parts carried thereby, to oscillate thereon. The diaphragm 41 is of the kind which I have described above; that is to say, the diaphragm is formed by reversely folding a sheet of material to form plaits, each plait forming an element of the diaphragm, and each of these plaits or elements is subjected to a torsional tension or strain by the bringing of the folded or plaited sheet of material into a substantially circular form. In these Figs. 9 to 11, the diaphragm is shown practically as being formed from a sheet of material such as is shown in Fig. 2; that is to say, a strip in which each plait is cut away at its inner corners so as to form a recess on each side of the center of the diaphragm to permit of a convenient attachment of the stylus bar to the diaphragm.

As is plainly shown in Fig. 10, the diaphragm 41 is clamped between the rings 37 and 38, and securely held in that position by means of the screws 42 passing through the said rings and drawing them together. I prefer, however, to interpose, between the rings 37 and 38, and the diaphragm, thin rings 43—43 of a suitable non-metallic and preferably slightly elastic material, one on each side of the diaphragm. These rings 43, may be of fabric, or rubber, or fiber, or any other suitable material to prevent an actual contact between the diaphragm and the metallic rings 37 and 38, and to securely hold the periphery of the diaphragm in a single plane. A suitable small trumpet 11, may be also secured between the rings for the purpose of directing the sound waves. I have shown it plainly in Figs. 9 and 10 as composed of a slightly flaring substantially conical member having a flange 11′ clamped between the rings 37 and 38, the screws 42 passing therethrough. The periphery of the diaphragm 41 is clamped between the intermediate rings 43, and held thereby in a single plane as plainly shown in Fig. 10.

The bottom of the reproducer is provided with a suitable support for the stylus bar, said support comprising a bar 44 secured to the ring 38 by screws 45, or in any other suitable manner. The said bar 44 may carry a block 46 rigidly secured thereto and upon the lower side of said block, I mount the stylus bar. Any suitable mounting for the stylus bar may be employed, but in the said modification illustrated in Figs. 9 to 11, I have shown the block 46 as provided with a pair of alined knife edges 47 engaging suitable recesses and lateral extensions 48 of the stylus bar 49. Each lateral extension is provided with a spring 50, one end of which is attached to said extension 48, and the other end of which extends outwardly and is provided with a hole through which a screw 51 passes, the head of the screw engaging the end of said spring 50 and the screw being threaded in a suitably tapped plate 52 carried by the said block 46. In this way the stylus bar is yieldingly held upon the knife edges 47, but is free to oscillate upon them as bearings.

The lower end of the stylus bar is provided with a suitable set screw 53 for securing the stylus 54 in the socket therein. The stylus bar 49 may have a portion 49′ extending at an angle to the stylus carrying portion and it may then extend upwardly as at 55 to the point of attachment to the center of the diaphragm. I have shown the said upwardly extending portion 55 as being curved in order to make it slightly yielding, and the point between the portions 49′ and 55 as being materially weakened to enable the stylus bar to readily bend or spring or give slightly at this point to transform the vibratory movement of the stylus into a reciprocatory movement of the portion 55 which is directly attached to and consequently communicates its motion to the center of the diaphragm.

In adjusting the reproducer to the re-

corded surface, the arm 30 should be set at such a height that the stylus will be given a slight rake to the recorded surface, as plainly shown in Fig. 9. This will permit the record to slide freely beneath the stylus without unduly scratching the same and cause the stylus to engage the record with a sufficient pressure to insure the tracking of the stylus in the record groove. The record may then slide freely beneath the stylus, and the whole reproducer may swing slightly on the bolts or pins 40 to allow for any irregularity or unevenness or warp in the recorded surface.

In order that the stylus may not bear too heavily upon the record, the trumpet 11 may be provided with a suitable counterbalance-weight 59.

From the preceding description it will be plain that the whole construction is such that the trumpet, diaphragm, rings and stylus attached thereto may be swung upwardly about the bolts or pin 34 as a pivot for the purpose of replacing the stylus or for throwing the whole device into an inoperative position, as indicated in dotted lines in Fig. 9.

In operation it will be apparent that when the record is given a rotary movement from the turn-table 20 and the stylus 54 engages the record 21, the whole reproducer will swing about the stem or pintle 31 as a pivot allowing the needle or stylus 54 to track across the record and the stylus will be caused to assume the correct angle to the recorded surface by the adjustment of the step 32 against which the stem or pintle 31 abuts, and further, that the stylus will be prevented from bearing too heavily upon the record by the counter-weight 59 attached to the upper end of the trumpet 11.

In all the forms which I have above described, it will be seen that the diaphragm is constructed upon the same principle, and that it is mounted in substantially the same way, and that any suitable manner of securing the stylus to the center of the diaphragm may be employed, and while I have shown a small trumpet 11 in connection with the constructions which I have illustrated, it is to be understood that the trumpet may be entirely dispensed with if desired, the function being to give direction to the sound waves rather than to increase the volume of the sound reproduced by the diaphragm.

Having thus described my invention, what I claim and desire to protect by Letters Patent of the United States, is:—

1. A phonic diaphragm having a plurality of reversely flexed sound-responsive elements, each of said elements being held distorted from a normal shape under a torsional stress and tending to return to said normal shape.

2. In a sound box, the combination of a diaphragm composed of a plurality of radial sound-responsive elements, tending to assume a position coincident with a plane surface, and means to hold said elements in a flexed position.

3. A phonic diaphragm having a plurality of radial flexed sound-responsive elements, each element held under a torsional stress due to its flexed condition and tending to return to an unflexed condition.

4. A phonic diaphragm, having its entire surface composed of adjacent like elements arranged to form both salient and reëntrant angles, said angles forming alternate radial ridges and grooves, each of said elements being held distorted from a normal condition by a torsional stress and tending to return to said normal condition.

5. In a sound box, the combination of a diaphragm, having a plurality of radial sound-responsive elements tending to assume a position coincident with a plane surface, and means to hold said elements in a flexed position, with the outer ends of said flexed elements in a single plane.

6. A phonic diaphragm, having a plurality of sound-responsive elements, the angle between adjacent pairs of which progressively varies.

7. A phonic diaphragm including a plurality of like elements, each element being arranged between and inclined with respect to adjacent elements, each element being held under a torsional stress, and said elements tending to assume positions coincident with a common plane.

8. A phonic diaphragm, comprising a plurality of helical sound-responsive elements, which tend to form a common plane surface.

9. A phonic diaphragm, having a plurality of torsioned elements radially disposed, said elements tending to assume positions coincident with a common plane.

10. A circular phonic diaphragm, having a plurality of elements, the slope of which transverse to the radius varies continuously from a maximum at the center of the diaphragm to a minimum at the periphery.

11. A phonic diaphragm, having a plurality of elements of transverse slope, varying progressively along a radius.

12. A phonic diaphragm having a plurality of like torsioned elements which tend to return to a normal configuration.

13. A phonic diaphragm, formed of a plurality of sound-responsive elements, each of which is distorted under tension intermediate of its peripheral portions by the relationship of adjacent elements, and positive means for restraining the peripheral portions, said elements tending to return to a normal configuration.

14. In a sound recording or reproducing machine, a diaphragm composed of a plurality of elements, each of which is normally

subjected to torsional stress while in inoperative position, a stylus operatively connected to said diaphragm, and means to hold the edges of said diaphragm in substantially a single plane.

15. In a sound recorder or reproducer, a diaphragm composed of a plurality of elements, each of which is subjected to a torsional stress, the inner edge of each element being substantially parallel to the axis of the diaphragm.

16. In a sound recorder or reproducer, a diaphragm composed of a plurality of elements, each of which is subjected to a torsional stress, the inner edge of each element being substantially parallel to the axis of the diaphragm, and the corners of each element at the center of the diaphragm being beveled to form a recess at the center of the diaphragm.

17. In a sound recorder or reproducer, a diaphragm composed of a plurality of elements radially arranged, the inner edge of each element being substantially parallel to the axis of the diaphragm, and the outer edge of each element being substantially in a plane normal to the axis of said diaphragm.

18. In a sound recorder or reproducer, a diaphragm composed of a plurality of elements, the inner edge of each element being substantially parallel to the axis of the diaphragm, and means to hold the outer edge of each element in a single plane.

19. In a sound recorder or reproducer, a diaphragm composed of a plurality of helical elements radiating from the center of the diaphragm, and a stiffening ring secured to the outside edges of said elements.

20. In a sound recorder or reproducer, a diaphragm composed of a plurality of elements, each of which is distorted by a torsional stress and tends to return to a normal configuration, and clamping rings on each side of the peripheral edge of the diaphragm holding said edge in a single plane.

21. A phonic diaphragm comprising a body portion of substantially uniform thickness of material and arranged substantially in the form of a double cone.

22. A phonic diaphragm, comprising a body portion consisting of a single thickness of material and arranged substantially in the form of a double cone, having a substantially flat flexible rim and oppositely disposed radial plaits, tapering outwardly in depth from the center of said body portion.

23. A phonic diaphragm comprising a body portion consisting of a single thickness of material, having a substantially circular rim arranged in a single plane, said body portion being provided with radial plaits tapering outwardly in depth from the central portion of the diaphragm, said plaits having their alternate angles upon opposite sides of said plane and arranged in substantially balanced or symmetrical relationship thereto.

24. The combination with a phonic diaphragm of means normally holding said diaphragm, when in inoperative position, under a torsional stress.

25. A phonic diaphragm having a portion normally held, when in inoperative position, under a torsional stress and tending to return to its original state.

26. In a sound box, the combination with an annular support, of a diaphragm carried thereby, a bar secured to opposite portions of said support, a block rigidly secured to said bar, a stylus bar phonetically connected to said diaphragm and provided with oppositely disposed lateral extensions, alined knife edges between said extensions and said block and yielding means for holding said bar in position with respect to said block.

27. In a sound box, the combination with an annular support, of a diaphragm carried thereby, a bar secured to opposite portions of said support, a block rigidly secured to said bar, a stylus bar phonetically connected to said diaphragm and provided with oppositely disposed lateral extensions, alined knife edges between said extensions and said block, and yielding means for holding said bar in position with respect to said block, said yielding means comprising a spring between each of said extensions and said block.

28. In a sound box, the combination with a diaphragm, of a stylus bar comprising an inner portion phonetically connected to said diaphragm, and a comparatively rigid outer portion mounted to oscillate about a fixed axis and forming a continuation of, and extending substantially at a right angle with, said inner portion, said bar having a flexible reduced portion connecting and forming a hinge between said inner and outer portions at the vertex of said angle, and the oscillation of said outer portion producing a longitudinal reciprocation of said inner portion, said flexible portions being connected only to said inner and outer portions.

29. In a sound box, the combination with a diaphragm, of a stylus bar comprising an inner portion phonetically connected to said diaphragm, and a comparatively rigid outer portion mounted to oscillate about a fixed axis and forming a continuation of, and extending substantially at a right angle to, said inner portion, said bar having a flexible reduced portion connecting and forming a hinge between said inner and outer portions at the vertex of said angle, and the oscillation of said outer portion producing a longitudinal reciprocation of said inner portion, and said inner portion being partly in the form of a yielding loop to permit the effective length of said inner portion to be varied slightly

by the oscillation of said outer portion, said flexible portions being connected only to said inner and outer portions.

30. In a sound box, the combination with a support, of a diaphragm carried thereby, and a stylus bar, said stylus bar including a comparatively rigid portion mounted to oscillate on said support, and a connecting portion between said first mentioned portion and said diaphragm, said portions being joined by a flexible reduced portion forming a hinge between and connected only to said first mentioned portions, and the oscillation of said first mentioned portion resulting in the longitudinal reciprocation of said connecting portion.

31. A phonic diaphragm having a portion normally distorted under a twisting stress while in an inoperative position, and tending to return to its original form.

In witness whereof I have hereunto set my hand this 11th day of March, A. D. 1910.

LOUIS LUMIERE.

Witnesses:

PAUL H. CRAM.

SEPTIMUS BRACHER.

DEFENDANT'S EXHIBIT NO. 11-F.

J. C. ENGLISH.

SOUND BOX FOR TALKING MACHINES.

APPLICATION FILED OCT. 31, 1910.

1,064,062. Patented June 10, 1913

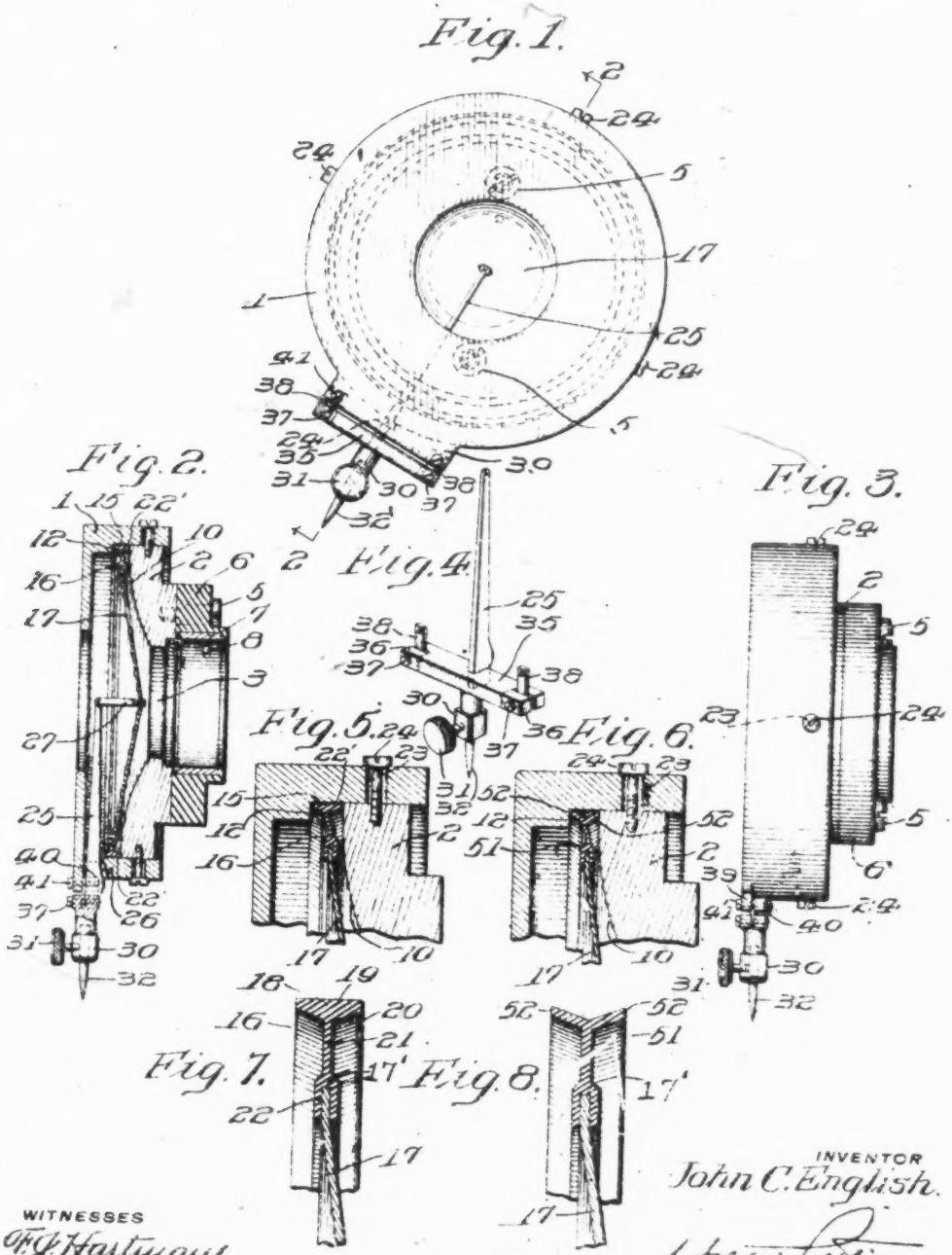

WITNESSES

F. J. Hartman.

A. S. Gardner.

INVENTOR

John C. English.

BY

Howe & Pettis.

ATTORNEY

510

UNITED STATES PATENT OFFICE.

JOHN C. ENGLISH, OF CAMDEN, NEW JERSEY, ASSIGNOR TO VICTOR TALKING MACHINE COMPANY, A CORPORATION OF NEW JERSEY.

SOUND-BOX FOR TALKING-MACHINES.

1,064,062. Specification of Letters Patent. Patented June 10, 1913.

Application filed October 31, 1910. Serial No. 589,246.

To all whom it may concern:

Be it known that I, JOHN C. ENGLISH, a citizen of the United States, and a resident of the city of Camden, county of Camden, and State of New Jersey, have invented certain new and useful Improvements in Sound-Boxes for Talking-Machines, of which the following is a full, clear, and exact disclosure.

The main objects of this invention are, to provide an improved sound box of simple, compact and durable construction that will record or reproduce sounds with great accuracy and efficiency; to provide in a sound box, an improved casing, an improved diaphragm, and an improved stylus bar and mounting therefor; and to provide other improvements as will appear hereinafter.

It has been contended that in sound boxes in which a thin flexible diaphragm is used and in which the sound vibrations are produced or recorded by flexing the diaphragm, the diaphragm acts like a reed and responds sympathetically to certain tones in a manner that produces undesirable results. It has also been contended that such a diaphragm is comparatively difficult to vibrate and does not act with sufficient sensitiveness to produce or to record delicate over-tones. In this invention these defects which it has been contended are incident to the recording or reproduction of sound by the flexing of a diaphragm, are obviated by utilizing, instead of a flexible diaphragm, a light substantially inflexible diaphragm and an improved mounting therefor whereby the diaphragm is permitted to vibrate as a whole without being flexed.

In the accompanying drawings, Figure 1 is a front elevation of a sound box constructed in accordance with this invention; Fig. 2 a transverse section on the line 2—2 of Fig. 1; Fig. 3 a side elevation of the same; Fig. 4 a perspective of a detail of the same; Fig. 5 a fragmentary enlargement of a portion of Fig. 2; Fig. 6 a view similar to Fig. 5 but showing a modified form of this invention; Fig. 7 an enlarged fragmentary diametrical section of the diaphragm and mounting or supporting ring shown in Figs. 1, 2 and 5 as they appear before being placed in position in the sound box; and Fig. 8 is a view similar to Fig. 7, showing in a similar way the diaphragm and modified form of mounting therefor which are shown in operative position in Fig. 6.

Referring to the drawings, one embodiment of this invention comprises a cylindrical sound box casing or support composed of two main portions,—a cylindrical cup shaped front plate 1 and a back plate 2 telescoping into the front plate and provided with a circular central aperture 3 for the passage of sound waves.

Secured to the rear face of the back plate 2, coaxial therewith, by means of screw 5, is a yielding tubular extension 6 provided with a non-yielding lining 7 and an inwardly projecting stop 8, whereby the sound box may be telescoped over the usual tubular tone-arm or sound conveyer (not shown).

The inner surface 10 of the back plate 2 is preferably convexly curved flaring inwardly from the central aperture 3 to the outer periphery of the plate. The inner surface of the front plate 1 of the casing is preferably in the form of a stepped cylinder, providing an annular shoulder 12 facing rearwardly and spaced from the opposite inner surface of the back plate 2, forming therewith an annular recess 15 in which snugly fits a yielding gasket or mounting 16, in which is supported a diaphragm 17.

The gasket 16 is continuous or closed in structure, is preferably made of rubber or other suitable solid resilient or yielding material, and is preferably substantially T-shaped in cross section, comprising a base 18 substantially equal in width to the width of the recess 15, and having a cylindrical outer surface 19 slightly greater in diameter than the cylindrical inner surface of the recess 15. The inner surface of the base 18 is preferably convex in cross section and in the form of two oppositely disposed inwardly converging conical surfaces 20, which meet in a centrally arranged normally flat annular web 21 which forms a reduced intermediate portion of the gasket. This web 21 is integral with the base 18 and extremely thin and flexible. The inner portion of the web 21 terminates in an annular binder or holder

integral with and thicker than the web and is provided upon its inner edge with a centrally arranged annular cylindrical grooved recess 22, in which snugly fits the marginal portion of the diaphragm 17. The gasket may be held in position by means of wax 22′ or other similar material applied between the base of the gasket and the inner cylindrical surface of the front plate 1.

The diaphragm 17 is preferably made of paper or any other light material, and when made of paper or other similar porous material may be impregnated with resin or any other substance or composition to make the diaphragm moisture-proof. The diaphragm is of substantially uniform thickness throughout its entire extent, and with the exception of its marginal portion, is preferably dished or conical in shape, converging rearwardly axially with the sound box casing. The marginal portion of the diaphragm is preferably in the form of a flat annulus, arranged in a plane perpendicular to the longitudinal axis of the sound box.

As the diameter of the gasket 16 is slightly larger than the internal diameter of the recess 15, in which it is held, the gasket will be held under a state of compression when the diaphragm and gasket are in operative position in the casing, and the thin portion of the web 21 will be slightly distorted laterally, as shown in Fig. 2 and enlarged in Fig. 5, from its normally flat condition. The diaphragm is thus held when in operative position under a slight tension or compression against the periphery 17′ thereof by the gasket acting radially against the peripheral edge of the diaphragm and it may here be stated that so far as this application is concerned the expressions "periphery" or "peripheral portion" or "peripheral edge" refer to the outer edge of the diaphragm, that is to say, that portion of the diaphragm between the plane surfaces of the opposite sides of the marginal portion of the diaphragm.

To hold the back plate 2 in position and to permit of the adjustment of the back plate toward and away from the gasket 16, a series of oblong apertures 23 are provided through the cylindrical rim of the front plate, and a headed screw 24 extends loosely through each of these apertures and is threaded into the back plate. By this construction the pressing of the back upon the base of the gasket may be varied to increase or diminish the pressure of the gasket against the peripheral edge of the diaphragm.

For communicating vibrations corresponding to sound waves to or from the diaphragm, a stylus bar 25 is mounted to oscillate upon the front plate of the sound box casing, one end of the bar being within the casing axially in front of the diaphragm, and the bar extending radially outwardly through an aperture 26 provided therefor in the casing. The inner end of the stylus bar is pivotally connected to the outer end of a light but rigid connecting rod 27, the inner end of which is phonetically connected in any suitable manner to the central portion of the diaphragm, the outer end of the connecting rod being preferably bifurcated to receive the inner end of the stylus bar. The outer end of the stylus bar projects outwardly from the sound box casing and is provided with the usual stylus socket 30 and set screw 31 for holding a stylus 32 in place.

For supporting the stylus bar to oscillate upon a substantially fixed axis with respect to the sound box casing, the bar is provided outside of the casing with a cross-piece 35, rigid therewith, and projecting in opposite directions therefrom. Each end of this cross-piece 35 is recessed to receive a clamping plate 36, which is adjustably connected to the cross-piece by means of a headed screw 37, which extends loosely through the clamping plate and an aperture in one end of a flexible connector 38 and is threaded into the cross-piece 35.

Each of the two flexible connectors, or spaced yielding supports 38 is preferably made of thin tempered steel, but may be made of copper, fabric or other non-resilient material. Each connector 38 extends inwardly from the cross-piece 35, being clamped rigidly at its outer end between the cross-piece 35 and the clamping plates 36 by means of the screw 37. The inner end of each flexible connector 38 is similarly clamped against the rear surface of an extension 39, integral or rigid with the front portion of the sound box casing, by means of a clamping plate 40 and a screw 41. The flexible connectors 38 are thus arranged parallel to each other and in a plane substantially perpendicular to the longitudinal axis of the sound box casing.

The space between the extension 39 of the casing and the cross-piece 35 of the stylus bar is preferably only sufficient to permit of the necessary oscillation of the bar, and the bar is thus restrained to swing upon a substantially fixed axis, perpendicular to the bar and parallel to the plane of the marginal portion of the diaphragm.

In the modified form of this invention shown in Figs. 6 and 8, the sound box casing and the diaphragm 17 are constructed as hereinbefore described and the gasket 51 is substantially identical with the gasket 16, hereinbefore described except that the marginal portion of base of this gasket is bifurcated and in the form of two outwardly diverging portions 52. The outer diameter of the bifurcated base of this gasket is nor-

mally substantially the same as the inner diameter of the annular groove 15 in which it rests.

When the gasket 51 is in its operative position the free edges of the two portions 52 of the base of the gasket are clamped toward each other between the shoulder 12 of the front plate 1 and the inner surface of the back plate 2, so as to compress the gasket radially against the peripheral edge of the diaphragm 17. The thin web-like portion of the gasket is slightly distorted laterally from its normally flat plane by this compression.

The stylus bar and its mounting and other features of this modified construction may be the same as shown and hereinbefore described.

In the operation of this device, owing to the extreme thinness and flexible nature of the web forming the intermediate portion of the gasket, and to the extreme lightness and comparatively inflexible nature of the diaphragm, the diaphragm is extremely sensitive to respond to the vibration of the stylus bar in reproducing sound or to respond to the action of the sound waves in recording sound and in either case therefore the diaphragm vibrates as a whole without any appreciable flexing and there is very little, if any, appreciable loss of efficiency due to the diaphragm or its mounting.

It is evident that in applying this invention various changes might be made in the constructions without departing from the spirit of this invention or the scope of the appended claims.

Having thus described this invention, I claim and desire to protect by Letters Patent of the United States:

1. In a sound box, the combination with a substantially inflexible conical diaphragm, of a yielding gasket supporting said diaphragm, said gasket being held under an initial pressure forcing said gasket against the peripheral edge of said diaphragm.

2. In a sound box, the combination with a circular diaphragm, of a yielding gasket supporting the same, said gasket comprising an annular base portion greater in internal diameter than the diameter of said diaphragm and surrounding said diaphragm in the plane of the marginal edge thereof, and comprising a relatively thin annular portion between said base portion and said diaphragm.

3. A gasket for a sound box comprising an annular base portion, and a relatively thin normally flat annular portion carried by said base portion And projecting toward the center of said base portion from the internal surface of said base portion.

4. A yielding gasket for a sound box, comprising a base portion, a relatively thin portion inclosed by and projecting inwardly from said base portion, and a holder extending inwardly from said relatively thin portion, and adapted to support the marginal portion of a diaphragm.

5. An annular yielding gasket for a sound box, comprising a base portion, a relatively thin portion projecting inwardly from said base portion, and a grooved holder extending inwardly from said relatively thin portion, and adapted to support the marginal portion of a diaphragm.

6. In a sound box, the combination with a diaphragm, of yielding means engaging the peripheral edge of said diaphragm, and adjustable means for compressing said yielding means to apply a yielding pressure upon said peripheral edge radially with respect to said diaphragm.

7. In a sound box, the combination with a yielding support, of a diaphragm having its marginal edge surrounded and engaged by said support, the diaphragm being of a size to place the yielding support under initial compression, and adjustable means acting on the yielding support to modify the state of compression of said support.

8. In a sound box, the combination with a diaphragm having a cupped central portion and a substantially flat rim, of a yielding gasket engaging said rim and held under an initial pressure, forcing said gasket radially against the peripheral edge of said rim.

9. In a sound box, the combination with a diaphragm, of a yielding gasket supporting said diaphragm, and bearing against the marginal edge thereof, said gasket comprising a yielding base portion having a internal diameter greater than the externa diameter of said diaphragm and arranged in the plane of the marginal edge of said diaphragm, and comprising a relatively thin yielding portion between said base portion and said diaphragm.

10. An annular yielding gasket for a sound box, said gasket comprising a yielding annular base portion, and a yielding annular portion thinner than and inclosed by said base portion, integral therewith and projecting inwardly from the internal surface of said base portion.

11. An annular yielding gasket for a sound box, comprising a yielding annular base portion, a normally flat annular web thinner than said base portion and integral with and projecting inwardly therefrom, and an internally grooved holder projecting inwardly from said web and integral therewith.

12. In a sound box, the combination with a diaphragm of a gasket surrounding said diaphragm and supporting the same, said gasket comprising a holder embracing the

opposite sides of the margin of said diaphragm, having a relatively thin web-like yielding portion integral with said holder and surrounding the same.

13. In a sound box, the combination with a diaphragm of a gasket surrounding said diaphragm and supporting the same, said gasket comprising a holder embracing the opposite sides of the margin of said diaphragm, having a relatively thin web-like yielding portion integral with said holder and surrounding the same, said gasket being in contact with the marginal edge of said diaphragm.

14. In a sound box, the combination with a diaphragm vibratory as a whole, without flexing, and in a direction transverse to its own plane, of a yielding gasket surrounding and supporting said diaphragm, said gasket being free to flex, and being held under an initial state of compression by said diaphragm.

15. In a sound box, the combination with a diaphragm vibratory as a whole, without flexing, and in a direction transverse to its own plane, of a yielding gasket surrounding and supporting said diaphragm, said gasket being free to flex, and being held under an initial state of compression by said diaphragm, said gasket reacting to compress said diaphragm radially.

16. In a sound box, the combination with a dished diaphragm of substantially uniform thickness throughout its full extent, of a yielding gasket surrounding and supporting said diaphragm, said gasket being free to flex and being held in an initial state of compression by said diaphragm.

17. In a sound box, the combination with a diaphragm of a yielding gasket free to flex and supporting said diaphragm in an initial state of compression, said diaphragm reacting to hold said gasket under an initial state of compression.

18. In a sound box, the combination with a diaphragm vibratory as a whole without flexing, and in a direction transverse to its own plane, of a yielding gasket supporting said diaphragm and holding the same in an initial state of compression, said diaphragm reacting to hold said gasket in an initial state of compression.

19. In a sound box, the combination with a diaphragm vibratory as a whole without flexing and in a direction transverse to its own plane, of a yielding gasket entirely supporting said diaphragm and holding the same in an initial state of compression, said diaphragm reacting to hold said gasket in an initial state of compression.

20. In a sound box, the combination with a substantially inflexible diaphragm vibratory as a whole in a direction transverse to its own plane, of a yielding gasket inclosing said diaphragm and contacting with the peripheral edge thereof and holding said diaphragm in an initial state of compression, said diaphragm reacting through its marginal edge to hold said gasket in an initial state of compression.

21. A gasket for a sound box, comprising a continuous base portion, and a relatively thin web portion carried and surrounded by said base portion.

22. A gasket for a sound box, comprising a continuous base portion and a relatively thin web portion carried by said base portion and projecting into the space inclosed by said base portion.

23. A gasket for a sound box, comprising a continuous yielding base portion, and a relatively thin yielding web portion surrounded and carried by said base portion.

24. A gasket for a sound box, comprising a continuous yielding base portion, and a relatively thin yielding web portion surrounded and carried by said base portion and wholly included in the space surrounded by said base portion.

25. In a sound box, the combination with a diaphragm, of yielding means engaging the peripheral edge of the diaphragm and confined peripherally, and adjustable means for compressing said yielding means laterally to apply yielding pressure on the diaphragm in the plane of said edge.

26. A gasket for a sound box comprising a base portion, and a relatively thin flat web portion carried by said base portion and projecting inwardly from the internal surface of said base portion.

27. In a sound box, the combination with a diaphragm, of a yielding support engaging the peripheral edge of the diaphragm, and adjustable means acting on said yielding support to cause the same to apply different yielding pressures on the peripheral edge of the diaphragm in a plane substantially normal to the axis of the diaphragm.

28. In a sound box, the combination with a diaphragm, of yielding means engaging the peripheral edge of the diaphragm, and adjustable means acting on said yielding means to produce varying pressures of said yielding means on the diaphragm, said yielding means exerting a pressure on the peripheral edge of said diaphragm independently of said adjustable means.

29. In a sound box, the combination of a substantially inflexible diaphragm, a flexible web member supporting said diaphragm by engagement with the peripheral portion thereof, and means for causing stress in said flexible member to act on the periphery of said diaphragm solely in a plane substantially normal to the axis of said diaphragm.

30. In a sound box, the combination of a substantially inflexible diaphragm, a yield-

ing member surrounding and supporting said diaphragm, and means acting on said yielding member to vary the stress of said yielding member with respect to said diaphragm, said yielding member exerting a pressure on the peripheral edge of said diaphragm independently of said adjustable means.

In witness whereof, I have hereunto set my hand this 27th day of October, A. D. 1910.

JOHN C. ENGLISH.

Witnesses:
CHARLES C. MOSS,
FRANK B. MIDDLETON, Jr.

DEFENDANT'S EXHIBIT NO. 11-G.

515

J. C. ENGLISH.

SOUND BOX,

APPLICATION FILED JAN. 23, 1912.

1,192,289. Patented July 25, 1916.

Fig. 1.

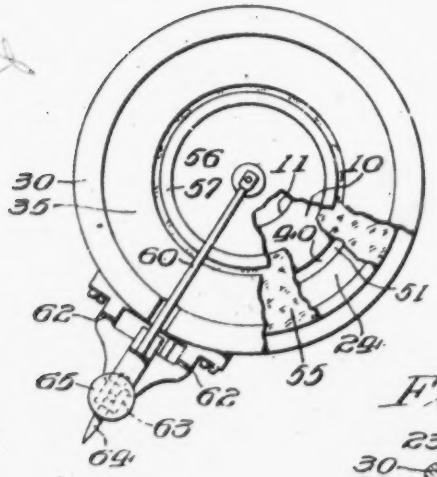

Fig. 2.

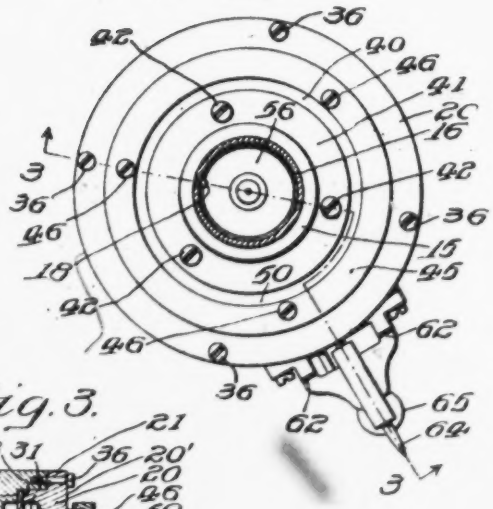

Fig. 3.

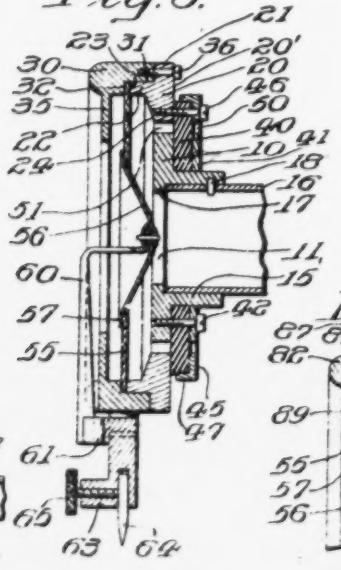

Fig. 4.

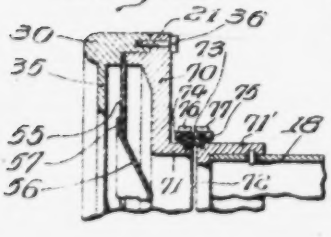

Fig. 5.

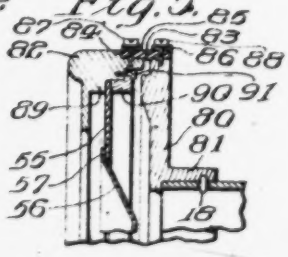

INVENTOR

John C. English.

WITNESSES

F. J. Hartman.

A. L. Gardner.

BY

ATTORNEY

UNITED STATES PATENT OFFICE.

JOHN C. ENGLISH, OF CAMDEN, NEW JERSEY, ASSIGNOR TO VICTOR TALKING MACHINE COMPANY, A CORPORATION OF NEW JERSEY.

SOUND-BOX.

1,192,289. Specification of Letters Patent. Patented July 25, 1916.

Application filed January 23, 1912. Serial No. 672,961.

To all whom it may concern:

Be it known that I, JOHN C. ENGLISH, a citizen of the United States, and a resident of the city of Camden, county of Camden, and State of New Jersey, have invented certain new and useful Improvements in Sound-Boxes, of which the following is a specification.

The main objects of this invention are to provide in a sound box for talking machines, adjustable means for supporting the major portion of the same; to provide in a sound box, an improved diaphragm and mounting therefor; and to provide other improvements as will appear hereinafter, the purpose as a whole being to provide a sound box that will be extremely efficient in operation.

In the accompanying drawings, Figure 1 is a fragmentary front elevation of a sound box constructed in accordance with this invention; Fig. 2 a rear elevation of the same; Fig. 3 a longitudinal section on line 3—3 of Fig. 2; and Figs. 4 and 5 are fragmentary longitudinal sections of two modified forms respectively of the same.

Referring to the drawings, one embodiment of this invention consists of a sound box comprising a casing, including a flat annular supporting plate or member 10, coaxial with the casing and forming a portion of the back thereof. This supporting plate 10 is preferably made of comparatively rigid material, such as brass or any other suitable metal. Surrounding the central opening 11 of this plate 10 and projecting rearwardly from the plate, and integral or rigid therewith, is a tubular extension 15, which is adapted to telescope over the open free end of the usual or any suitable hollow tone arm 16 or other support. The internal diameter of the tubular extension 15 is preferably somewhat greater than the diameter of the central opening 11 of the supporting plate 10, thus forming an internal annular shoulder 17 between the tubular extension 15 and the supporting plate 10, this shoulder being adapted to abut against the inner end of the hollow tone arm 16 to assist in holding the sound box in position upon the tone arm. The usual pin 18 projects inwardly from the tubular extension 15 rigid therewith, and is adapted to perform its usual function of engaging in a bayonet slot in the tone arm 16. The diameter of the opening 11 in the supporting plate and the internal diameter of the tone arm 16, are preferably made equal so that the inner surface of the tone arm 16 will be flush with the cylindrical wall of the opening 11.

Surrounding the supporting plate 10 coaxial therewith and slightly spaced therefrom, is an annular marginal member 20, also forming a portion of the back of the casing of the sound box, and preferably made of the same material as the supporting plate 10, or of any suitable comparatively rigid material. The rear surface 20′ of this marginal member 20, is preferably flat and normally flush with the rear surface of the supporting plate. This marginal member 20 is provided upon its outer margin with an outwardly projecting flat annular flange 21, integral and coaxial therewith, and arranged flush with the rear surface 20′ of the marginal member. The marginal member 20 projects forwardly from its flat annular flange 21 in the form of a cylindrical flange 22 having a flat annular forwardly facing end wall 23. From the cylindrical flange 22, the marginal member 20 tapers inwardly in thickness measured in a direction perpendicular to the rear surface 20′, and the inner face 24 of the member 20 is conical in form and coaxial with the tubular extension 15.

Telescoping snugly over the cylindrical flange 22 of the marginal member 20 is a hollow cylindrical cap 30, also preferably made of brass or other suitable comparatively rigid material. This cap 30 has a flat annular rear wall 31 normally abutting against the front face of the flange 21 of the marginal member 20, and is provided with an internal annular shoulder 32 normally spaced slightly in front of the end wall 23 of the flange 22 of the marginal member 20 and of equal dimensions. The front portion of the cap 30 is provided with an inwardly projecting flat thin annular flange 35, coaxial and integral or rigid therewith. The cap 30 is secured to the marginal member 20 by means of screws 36 extending through the flange 21 and threaded into the rear wall of the cap, or by any other suitable means.

For yieldingly supporting the marginal member 20 and cap 30 carried thereby, a flat yielding annulus 40 snugly surrounds the tubular extension 15 and is secured to the rear wall of the supporting plate 10 and also to the rear wall of the marginal member 20. This yielding annulus 40 is preferably made of felt, leather, paper, cork, rubber, or any other similar or suitable yielding material. It has been found that felt gives very good results in this connection. The annulus 40 is preferably clamped securely against the rear wall of the supporting plate 10 by means of a metal or other comparatively rigid annular washer 41, fitting snugly around the tubular extension 15, and clamped against the rear face of the annulus 40 by means of headed screws 42, extending loosely through the washer 41 and annulus 40 and threaded into the supporting plate 10. The annulus 40 is also preferably clamped securely against the rear wall of the marginal member 20 by means of a similar flat annular outer washer 45, surrounding and spaced from the inner washer 41 and clamped against the rear wall of the annulus 40 by means of headed screws 46 extending loosely through the washer and annulus and threaded into the marginal member 20. The screws 42 through the inner washer 41 are preferably arranged in staggered relation with respect to the screws 46 of the outer washer 45. This outer washer 45 is preferably provided with an inwardly projecting marginal cylindrical flange 47 which engages snugly over the outer marginal wall of the annulus 40, and the inner end wall of which is normally spaced slightly from the rear wall of the marginal member 20. This flange 47 serves to confine the annulus 40 within certain limits and also protects the margin of the annulus and improves the appearance of the sound box.

The annular space 50 between the inner and outer washers 41 and 45 is preferably opposite and substantially equal in area to the area of the space 51 between the supporting plate 10 and the marginal member 20, and these spaces are preferably only of sufficient width to permit of a desirable amount of yielding or flexing of the annulus 40 throughout the annular portion of the annulus included between these two annular spaces.

Any suitable diaphragm may be used in connection with the casing of this improved sound box, but in the present instance, an improved diaphragm, which has been made the basis of a separate application, is shown in this connection. This improved diaphragm comprises a thin flat outer annular portion 55, made of cork or a composition of cork, or made of other subereous or suitable yielding material, having little, if any tendency, to set up local vibrations. Surrounded by the flat annular portion 55 is a thin comparatively rigid cupped or conical portion 56, made of any suitable material, such as stiff paper, and arranged normally coaxial with the sound box casing, and having its convex side facing rearwardly. The marginal portion 57 of this conical portion 56 is preferably slightly flattened and overlaps the inner margin of the flat annular portion 55 and is secured thereto, preferably upon the front side thereof, by means of cement or glue, or in any other suitable manner.

The outer marginal portion of the diaphragm is clamped securely in position by and between the end wall 23 of the marginal member 20 and the internal shoulder 32 of the cap 30 of the sound box casing. The nature of the material forming the marginal portion of the diaphragm is such that when the diaphragm is thus clamped in position, it adheres to the walls between, and by which it is clamped and any possibility of leakage of the air around the outer margin of the diaphragm is thus avoided, and also any tendency of the diaphragm to rattle is avoided.

Connected to the central portion or apex of the conical portion 56 of the diaphragm is one end of a stylus bar 60, which projects outwardly from the conical portion in a direction substantially coaxial therewith to a point in front of the flange 35 of the cap 30, and then turns radially outwardly in a direction parallel to the flange 35 and spaced slightly in front thereof. The outer portion 61 of this stylus bar is offset rearwardly outside of the cap 30 and is mounted upon the cap 30 to oscillate in respect thereto by means of spaced yielding connections 62, these yielding connections being preferably arranged so that the axis of oscillation of the stylus bar is substantially in a plane with the flat annular portion 55 of the diaphragm. The stylus bar is provided with an enlarged outer end 63 adapted to hold the usual or any suitable stylus 64, which is held in place by the usual set screw 65.

From the foregoing description, it is evident that in the construction described, the sound box casing may be considered broadly as being composed of two independently movable rigid members, one of which, including the marginal member 20 and the cap 30, carries the diaphragm and cooperating stylus, and the other of which including the supporting plate 10 and its tubular extension 15, is adapted to be mounted upon the tone arm 16 or other suitable carrier, these two main portions of the sound box casing being connected by a yielding or hinge-like means which permits of the relative movement of the main portions of the casing, and also acting as a closure for the space between these portions. It is also evident

that the yielding annulus 40 may be placed under a greater or less initial tension by adjusting the screws 42 and 46 to vary the compression of the annulus and that this variation of the initial aperture or tension would correspondingly affect the yielding qualities of the annulus and the freedom of movement between the two main portions of the sound box casing, and give a corresponding modification in the volume and quality of reproduction. It is also evident that in the operation of this sound box, the central portion of the diaphragm will vibrate as a whole without flexing, and the surrounding portion will flex to permit of this vibration.

Instead of forming the back of the sound box casing as hereinbefore described, of two spaced annular members, one surrounding the other, the back of the sound box may be formed of a single piece as indicated at 70 in Fig. 4, and having a tubular extension 71, 71′ divided and spaced apart as at 72, the two portions 71 and 71′ of the tubular extension being yieldingly connected by a cylindrical ring 73 of yielding material, such as felt or rubber, etc., snugly surrounding the tubular extension and clamped to the two portions of the extension by means of comparatively rigid flanged rings 74 and 75 held in place by screws 76 and 77 extending through the rings and threaded into the two portions 71 and 71′ respectively of the tubular extension.

A further modification of this invention consists in forming the back of the sound box casing and its tubular extension in one part, as indicated at 80 and 81 respectively, and having an annular cap 82 spaced slightly in front of the back 80 and yieldingly connected thereto by means of a yielding cylindrical ring 83 surrounding the back 80 and engaging in an annular recess 84 provided therefor in the outer surface of the cap 82, the yielding ring 83 being clamped in position against the cap 82 and the back 80 by means of the rings 85 and 86 surrounding the yielding ring and held in place by screws 87 and 88 respectively, extending through the rings and threaded into the cap and the back respectively. In this case, the diaphragm is clamped in place between a ring 89 and the flanged ring 90 carried by the cap 82, the latter ring being clamped in position by means of screws 91 extending through the ring and threaded into the cap.

This invention is not limited to any specific construction disclosed, as various changes might be made in applying this invention without departing from the spirit of the invention or the scope of the appended claims.

Having thus fully described my invention, I claim and desire to protect by Letters Patent of the United States:

1. A sound box casing comprising two spaced portions, yielding substantially non-resilient means connecting said portions and means arranged to limit the outward radial expansion of said first-named means.

2. A sound box comprising an annular supporting member provided with a tubular extension rigid therewith, an annular marginal member surrounding and spaced from said supporting member, and yielding means surrounding said tubular extension and connecting said supporting member and said annular marginal member.

3. A sound box comprising an annular supporting member provided with a tubular extension, an annular marginal member surrounding said supporting member, a diaphragm carried by said marginal member, and yielding means surrounding said tubular extension and connecting said supporting member and said marginal member.

4. A sound box comprising an annular supporting member, an annular marginal member surrounding said supporting member and spaced therefrom, yielding means connecting said members and forming a closure for the space between the same, and a diaphragm carried by said marginal member.

5. A sound box comprising an annular supporting member provided with a tubular extension rigid therewith, a second annular member surrounding said first-mentioned annular member, a diaphragm carried by said second annular member, and yielding means connecting said annular members.

6. A sound box comprising an annular supporting member provided with a tubular extension rigid therewith, an annular marginal member surrounding said supporting member and spaced therefrom, and a flat yielding annulus surrounding said tubular member and connecting said members.

7. A sound box comprising a casing including an annular supporting member provided with a tubular extension rigid therewith, an annular marginal member surrounding said supporting member and spaced therefrom, a substantially flat yielding annulus snugly surrounding said tubular extension and connecting said members, and annular means overlapping and engaging the outer margin of said annulus for holding the same in position.

8. A sound box comprising a casing including an annular supporting member having a tubular extension rigid therewith, an annular marginal member surrounding said supporting member and spaced therefrom, a yielding annulus surrounding said tubular extension outside of said members, a washer surrounding said tubular extension, means for clamping said washer against said annulus, an outer washer surrounding and spaced from said first mentioned washer,

and means connected to said annular marginal member for clamping said outer washer against said annulus.

9. A sound box comprising a casing including an annular supporting member having a tubular extension rigid therewith, an annular marginal member surrounding said supporting member and spaced therefrom, a yielding annulus surrounding said tubular extension outside of said members, a washer surrounding said tubular extension, means for clamping said washer against said annulus, an outer washer surrounding and spaced from said first mentioned washer, and means connected to said annular marginal member for clamping said outer washer against said annulus, said latter washer being provided with an inwardly projecting marginal flange overlapping and engaging the marginal edge of said annulus.

10. A sound box comprising an annular supporting member provided with a tubular extension rigid therewith, an annular marginal member surrounding and spaced from said supporting member, an annular cap carried by said marginal member, a diaphragm clamped between said cap and said marginal member, and yielding means connecting said supporting member and said marginal member.

11. A sound box comprising an annular supporting member provided with a tubular extension rigid therewith, an annular marginal member surrounding and spaced from said supporting member, an annular cap carried by said marginal member, a diaphragm clamped between said cap and said marginal member, and yielding means connecting said supporting member and said marginal member, said diaphragm comprising a flat, annular yielding portion, and a comparatively rigid central portion surrounded by and secured to said flat yielding portion.

12. A sound box comprising an annular supporting member provided with a tubular extension rigid therewith, an annular marginal member surrounding and spaced from said supporting member, an annular cap carried by said marginal member, a diaphragm clamped between said cap and said marginal member, and yielding means connecting said supporting member and said marginal member, said diaphragm comprising a flat, annular yielding subereous portion, and a comparatively rigid central portion surrounded by and secured to said flat yielding portion.

13. A sound box casing comprising two separately movable portions, yielding means forming the sole connection between the said portions, and means arranged to compress said yielding m ans in one direction, said yielding means being held against expansion in a direction transverse to said first-mentioned direction.

14. A sound box casing comprising two spaced portions, yielding means holding said portions in spaced relationship, means to subject said yielding means to different degrees of compression, and means to limit the outward expansion of said yielding means.

15. A sound box casing comprising spaced portions, yielding annular means holding said portions in spaced relationship, means to subject said annular means to different degrees of compression and annular relatively rigid means inclosing said yielding means to limit the outward expansion of said yielding means.

16. A sound box casing comprising two spaced portions, yielding annular means forming a closure for the entire space between said portions, means clamping said yielding means to one of said portions, and means clamping said yielding means to the other of said portions, said portions being in contact with said yielding means upon one side only of said yielding means.

In witness whereof, I have hereunto set my hand this 19th day of January A. D., 1912.

JOHN C. ENGLISH.

Witnesses:
EDWARD K. MACEWAN,
JOHN D. MYERS.

DEFENDANT'S EXHIBIT NO. 11-H.

J. H. ELFERING.
SOUND BOX DIAPHRAGM.
APPLICATION FILED NOV. 12, 1910.

1,182,078. Patented May 9, 1916.

Fig. 1

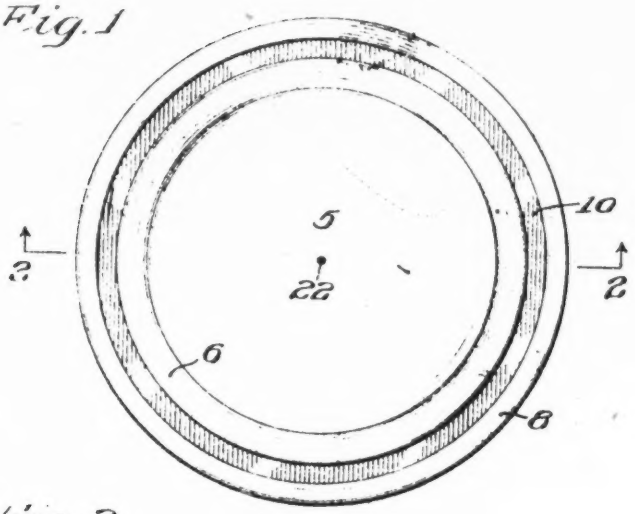

Fig. 2.

Fig. 3.

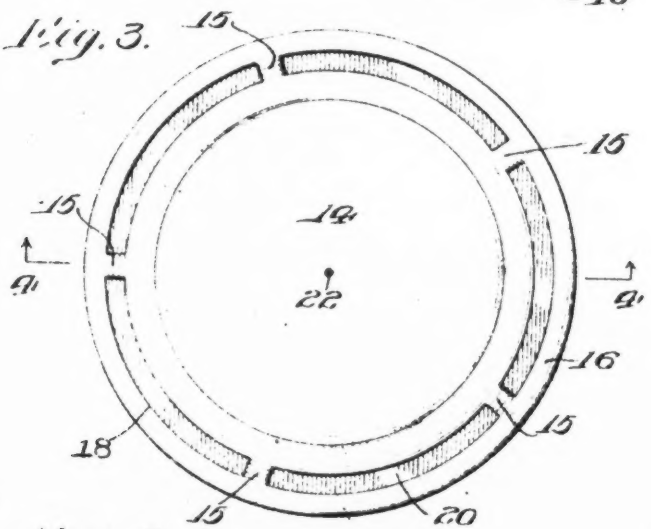

Fig. 4.

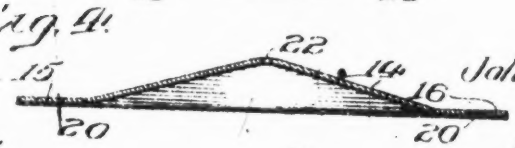

INVENTOR
John H. Elfering.

WITNESSES
F. V. Hartmann.
Jon C. Hallowell

BY
[illegible]

ATTORNEY

UNITED STATES PATENT OFFICE.

JOHN H. ELFERING, OF CAMDEN, NEW JERSEY, ASSIGNOR TO VICTOR TALKING MACHINE COMPANY, A CORPORATION OF NEW JERSEY.

SOUND-BOX DIAPHRAGM.

1,182,078. Specification of Letters Patent. Patented May 9, 1916.

Application filed November 12, 1910. Serial No. 591,947.

To all whom it may concern:

Be it known that I, JOHN H. ELFERING, a citizen of the United States, and a resident of Camden, in the county of Camden and State of New Jersey, have invented certain new and useful Improvements in Sound-Box Diaphragms, whereof the following is a specification, reference being had to the accompanying drawing.

This invention particularly relates to diaphragms for sound recording and reproducing devices, such as are preferably adapted to talking machines.

The principal object of this invention is to provide a diaphragm that will readily respond to the most delicate vibrations and accurately record and reproduce all of the high and low tones and the included range with equal clearness.

Further objects of this invention are to provide a diaphragm having its major portion formed substantially inflexible and capable of reciprocation independently of its margin; and to provide means to flexibly connect said inflexible major portion with said margin.

The form of this invention hereinafter described provides a diaphragm comprising a central conically dished inflexible plate, having a peripheral flange extended in a plane in substantially perpendicular relation to the axis of said conical plate, a separate annular margin surrounding said flange in a plane therewith, and a thin flexible imperforable membrane connecting said flange and margin and arranged to support said inflexible plate.

This invention further includes all of the various novel features of construction and arrangement hereinafter more definitely specified.

In the accompanying drawing Figure 1 is a front elevational view of a diaphragm showing the preferred embodiment of this invention; Fig. 2 is a central transverse sectional view taken on the line 2—2 in Fig. 1: Fig. 3 is a front elevational view of a modification of the structure shown in Fig. 1: and Fig. 4 is a transverse sectional view of the diaphragm shown in Fig. 3 and taken on the line 4—4 in said figure.

In the form of this invention shown in Figs. 1 and 2 the central major portion of the diaphragm comprises the conically dished disk or plate 5, which as best shown in Fig. 2 has the peripheral flange 6 extended in a plane in perpendicular relation to the axis of said diaphragm and surrounded by the annular marginal member 8 in spaced relation to the periphery of said flange 6, and in a plane therewith. Said marginal member 8 is connected with the flange 6 by a thin membrane 10, which may be formed by any suitable imperforable flexible material, preferably gold beater's skin, and which may be conveniently secured to said connected members by any suitable adhesive material. Said membrane 10 is arranged to support the central conical plate 5 in reciprocatory relation to the marginal member 8 which may be suitably secured in a sound box of any convenient construction.

It may be here noted that the diaphragm may be formed of any suitable material preferably paper or other fibrous material which may be treated with a resinous solution or other convenient material to render it impervious to any atmospheric conditions or moisture or may be formed of any stiff sheet material.

The form of this invention shown in Figs. 3 and 4, provides a diaphragm similar to the diaphragm shown in Figs. 1 and 2, and comprises the rigid central portion forming the conically dished plate 14 which is connected by the narrow webs or spokes 15 with a sound box engaging marginal portion 16, forming the arc-shaped apertures 18, which are local to the periphery of said diaphragm, and which permit the free relative vibration of the central portion or plate 14, with respect to the marginal portion 16 to which it is connected by the flexible membrane 20. As best shown in Figs. 1 and 3, the central plates 5 and 14 are respectively provided with apertures 22, for the convenient attachment of a stylus bar (not shown) which may be cooperative therewith to record and reproduce sound.

It is well known that in diaphragms wherein the margin is engaged in a sound box, and the intermediate portion is free to vibrate to reproduce sound, the central portion which is connected with the stylus bar is afforded the maximum vibration, while the surface intermediate of the central portion and the periphery vibrates with varying force diminishing toward the margin of the diaphragm which is engaged. Therefore it will be readily observed that a diaphragm

constructed in accordance with this invention is advantageous in that the major portion is substantially inflexible, and is reciprocated bodily, thus vibrating substantially uniformly throughout its extent, and consequently the compression and rarefaction of the air in the sound conveyer due to the vibration of said diaphragm is uniform throughout its extent.

It is not desired to limit this invention to the precise details of construction and arrangement herein set forth, as it is obvious that various modifications may be made therein without departing from the essential features of the invention as defined in the appended claims.

Having thus described my invention, I claim:

1. A diaphragm having a substantially rigid major central portion, a marginal portion connected thereto by relatively narrow flexible radial sections, and a flexible concentric membrane intermediate of said central and said marginal portions.

2. A diaphragm having a rigid major central portion connected with a marginal portion by integral relatively narrow flexible radial sections and a flexible web connecting said central portion and marginal portion together.

3. A diaphragm comprising a central comparatively rigid conical dished major portion, a surrounding portion and a plurality of radial webs and an annular web connecting said portions.

In witness whereof I have hereunto set my hand and seal this 9th day of November A. D. 1910.

JOHN H. ELFERING. [L. S.]

Witnesses:

EDWARD K. MACEWAN,

FRANK B. MIDDLETON, JR.

may be quite free, or it may be attached to the inner edge of a flat flexible ring, the outer edge of which is fixed to the casing, the said ring and member thus dividing the latter into two compartments. The flexibility of this ring, and the manner of its attachment to the aforesaid member, should not be such as to hamper or suppress the small vibratory movements of any part of the member to any appreciable extent. The said member may be made of any suitable material, and in this connection I may state that I have found aluminium to be satisfactory.

The working of the device described above will be readily understood. The vibratory movements of the portion of the armature to which the aforesaid member is attached are imparted to this member as a whole; this member therefore acts like a reciprocating piston and sets a large surface of air into vibration simultaneously and to the same or approximately the same extent at all points. In the case of the said member being conically shaped, the increased efficiency is probably due partly to the fact that the disturbances set up in the air in contact with the conical surface tend to converge and to arrive simultaneously at the region where the ear of the operator is situated. In any case the distinctness and audibility of messages received are largely increased, and the range of distance over which speech is practicable is also increased.

Dated this 22nd day of December, 1910.

HASELTINE, LAKE & Co.
7 & 8, Southampton Buildings, London, England, and
60, Wall Street, New York City, U.S.A.,
Agents for the Applicant.

COMPLETE SPECIFICATION.

Improvements relating to the Reproduction of Sound by Electrical Means.

I, SIDNEY GEORGE BROWN, of 4, Great Winchester Street, in the City and County of London, Electrical Engineer, do hereby declare the nature of this invention and in what manner the same is to be performed, to be particularly described and ascertained in and by the following statement:—

This invention relates to the reproduction of sound by electrical means and has particular reference to telephone receivers.

The usual telephone receiver consists of a polarised electro-magnet through the coil of which the line currents pass, and a flat soft iron diaphragm gripped peripherally and thereby held a short distance away from the electromagnet. Variations in the strength of the line current cause the diaphragm to vibrate, and, in so doing, to set the surrounding air into vibration.

In order to obviate the unequal extent of vibration of different points on a peripherally gripped diaphragm proposals have been made to support the diaphragm at its centre leaving the periphery free, or to provide for resiliency or flexibility between the diaphragm proper and its peripheral support, thereby obtaining a piston-like action of the diaphragm. It has been suggested to form such diaphragms of metal, ebonite, or other suitable material, and to impart to them a conical or dished appearance. The chief object of the present invention is to provide an instrument of this kind in which a high efficiency of conversion of oscillations or variations of electric current into acoustic vibrations is obtained. Apart from the actual construction and positioning of the parts of such an instrument, the conditions necessary for the transmission of the air vibrations away from the actual surface of the diaphragm

importance. Hitherto sufficient attention has not been paid to the volume of air set in motion and the variations of air pressure for producing the most effective transmission. The dimensions of the ear-drum and of the aural cavity may be taken as invariable factors in such considerations. Now these factors being known, there are certain relations existing between them and the size of the diaphragm, the nature of the air pressure variations, and the volume of air set in motion, for the most effective reproduction of the sounds, and the transmission of them to the ear-drum. For these and other reasons it is quite impracticable to make the diaphragm fulfil also the functions of an ear piece; a separate ear piece is a necessity.

According to the present invention the receiver comprises a light conical or similarly shaped diaphragm, a resilient member responsive to variations of current strength in a coil through which the line currents pass and carrying the diaphragm by its centre so that the latter is free to vibrate as a whole, and a cover or ear piece situated over the diaphragm at a comparatively short distance from the same. The inner surface of the cover or ear piece of the receiver is preferably formed to correspond approximately with the shape of the diaphragm, so as to reduce the excessively large space that would otherwise intervene between these parts. I have found that a conical disc formed from a very thin sheet of aluminium or aluminium alloy or steel and suitably stiffened by ribs, or corrugations, or otherwise, possesses the requisite properties to a satisfactory degree. The thin disc, if of aluminium or an alloy thereof, may conveniently be spun into the desired conical shape with a flat centre piece. It is advantageous for the strength and thickness to be greatest at the centre and progressively less towards the edge, and by starting the spinning operation at the edge and working towards the centre, this property of the spun disc will be naturally produced owing to the graduated thickness of the disc. To increase this effect several discs of different diameter may be assembled into a pile. The thickness of such discs may be of the order of 2½ thousandths of an inch. Some idea as to the lightness of a diaphragm so formed may be gained from the fact that when it is allowed to drop to the ground it does not fall like a heavy mass of metal, but moves gently through the air. The mere conical shape of the diaphragm will ensure a considerable amount of rigidity but this may be increased by providing radial ribs or corrugations on it as above mentioned.

The vibratory member that carries the diaphragm may consist of a resilient strip or reed of magnetic metal containing within itself, by reason of a cut-away portion, its own control and that of the diaphragm. The diaphragm is preferably attached at its centre to a point on the metal strip or reed slightly away from the free end of the latter so as to be eccentric with respect to the axis of the coil through which the line currents pass. The diaphragm is so arranged as to be free to move as a whole, that is to say all points on its surface vibrate equally, and to ensure this action the periphery of the diaphragm is either quite free or is attached to the usual casing by a mere thin ring of flexible material.

In order that the invention may be clearly understood and readily carried into effect I will now describe the same more fully with reference to the accompanying drawings, in which:—

Figure 1 is a plan with the cover removed, and

Figure 2 a sectional elevation, of one constructional form of my improved receiver. These drawings represent a full size receiver, and the more important dimensions such as the diameter of the diaphragm, the extent of its eccentricity, and the volume and shape of the air space between the diaphragm and the ear-piece or cover are what I have found by experiment to give good results for hearing with the receiver close to the ear, by reason, no doubt, of the relation these dimensions bear to the diameter of the ear-drum and the volume of the aural cavity. Where it is desired to make the sounds travel out into the room, a receiver of larger size is preferable.

Figures 3 and 4 are detail sectional elevations of modifications of the receiver.

Referring first to Figures 1 and 2, A is the casing and B the ear-piece or cover of the receiver. E is a metal reed one end of which is held down upon a bridge piece E^1 on the casing E by two adjusting screws E^2. N and S represents the north and south poles, respectively, of a polarised electromagnet to the ends of which are attached L-shaped pieces the vertical members of which, constituting the cores D, have the coil C wound around them; the ends of the said vertical members slope towards one another so as to be directly under the metal reed E. A portion E^3 of the reed E is cut away to increase its flexibility and decrease its weight. I have found that a suitable free period for the reed is from eight hundred to one thousand two hundred. The extent to which the reed E can approach the core D may be regulated by packing some layers of paper between these parts or by arranging a set screw to make contact with the reed, the provision of a set screw being shewn at D^1 Figure 3. This set screw D^1 may be tipped with gold or platinum so as to serve in conjunction with the reed E as a make and break arrangement in a circuit connected in parallel with the coil C. In this way any damage to the permanent magnetism of the core D owing to an extra heavy current passing through the coil C at any time is avoided, since the closing of the shunt circuit by the contact of the reed E with the set screw D^1 diverts the current away from the coil C.

F is a light aluminium diaphragm of conical form. It is attached at its centre to the reed E at a point eccentric with respect to the axis of the core D, the eccentricity being towards the fixed end of the reed. Although I have shown the best position for attaching the diaphragm in the particular receiver illustrated, the best position on any reed can be found by experiment by means of a stethoscope and by exploring the reed with the aid of a movable diaphragm.

The diaphragm F is either of such a size that its periphery is close up against the casing A or other adjacent stationary part, or, if an appreciable gap exists between these parts, the periphery of the diaphragm is flexibly attached to the casing or to a removable internal flange thereon by resorting to the known expedient of a ring of tissue paper, silk, or other suitable material F^1 that will not exert any appreciable mechanical constraint upon the diaphragm; this ring F^1 may be attached to the diaphragm and to the aforesaid flange by adhesive. In either case the space on the two sides of the diaphragm is divided into two separate air regions.

In the modification, shown in Figure 4, the north pole of the polarised electromagnet is surrounded by a ring-shaped south pole. In the annular space between these poles is situated a circular frame C^1 on which is wound the coil C. The frame C^1 is carried by the metal reed E. Variations in the strength of the current traversing the coil C cause this coil C to move vertically and thereby cause the frame C^1 to vibrate the reed E, and consequently the diaphragm F also. In this construction it is to be noted that the movements of the reed E do not materially affect the magnetic field between the poles of the electromagnet.

It will be understood that owing to the extreme lightness of the diaphragm and to its freedom from peripheral constraint, it will be highly responsive to movements of the reed E and will vibrate as a whole.

It will also be observed that the function of the reed E is not to set the air in motion but only to carry the diaphragm and control its movement. This reed contains within itself, by reason of its cut away portion E^1, the means of its own control and that of the diaphragm, and, in the arrangement shown in Figures 1 and 2, also serves to complete the magnetic circuit; the diaphragm forms no part of this circuit. The inner face of the cover or ear-piece B conforms approximately to the shape of the diaphragm, and its distance from the diaphragm is such as to give only the requisite air space between these two parts. The sectional area of the central hole or holes in the ear-piece is suitably proportioned to the aforesaid air space.

Improvements relating to the Reproduction of Sound by Electrical Means.

Although the invention has been described and illustrated with reference to a "watch" type of receiver, it is of course equally applicable to the long handle type of receiver. It has been proved by actual experiment that receivers possessing the constructive features hereinbefore described considerably increase the maximum distance over which distinct speech can be conveyed.

Having now particularly described and ascertained the nature of my said invention and in what manner the same is to be performed, I declare that what I claim is:—

1. A telephone receiver comprising a light conical or similarly shaped diaphragm, a resilient member responsive to variations of current strength in a coil through which the line currents pass and carrying the diaphragm by its centre, and a cover or ear piece situated over the diaphragm, substantially as and for the purposes specified.

2. A telephone receiver in which the inner surface of the cover or ear piece situated over the conical or similarly shaped diaphragm corresponds approximately with the shape of the diaphragm, substantially as and for the purpose specified.

3. A telephone receiver comprising a casing, a resilient member responsive to variations in the strength of the line current, a light conical or similarly shaped diaphragm carried at its centre by the resilient member, and a ring of thin flexible material connecting the periphery of the diaphragm with the adjacent wall of the casing or other stationary part, substantially as and for the purpose specified.

4. A telephone receiver, in which the diaphragm attached to the resilient member that is responsive to variations in the line current is situated eccentrically with respect to the electro-magnet, the eccentricity being towards the fixed end of the resilient member, substantially as described.

5. In a telephone receiver, a conical diaphragm built up, or radially corrugated or ribbed, or spun from a disc, in such a way as to be strongest at the centre and of diminishing strength towards the periphery, substantially as described.

6. A telephone receiver, comprising a polarised electro-magnet through the coil of which the line currents pass, a magnetic armature having a cut-away portion to impart resiliency to it, a conical aluminium diaphragm attached to the armature eccentrically with respect to the electromagnet and towards the fixed end of the armature, and a thin flexible ring of material connecting the periphery of the diaphragm to an internal removable flange on the casing, the latter having a conical inner face conforming approximately to the shape of the diaphragm, substantially as described.

7. A telephone receiver having its parts constructed arranged, and adapted to operate, substantially as hereinbefore described with reference to the accompanying drawings and for the purposes specified.

Dated this 19th day of June, 1911.

HASELTINE, LAKE & Co.,
7 & 8, Southampton Buildings, London, England, and
60, Wall Street, New York City, U.S.A.,
Agents for the Applicant.

A.D. 1910. Dec. 22. No. 29,833
BROWN'S Complete Specification
(1 SHEET)

This page is a full size reproduction of the original

Fig. 1.

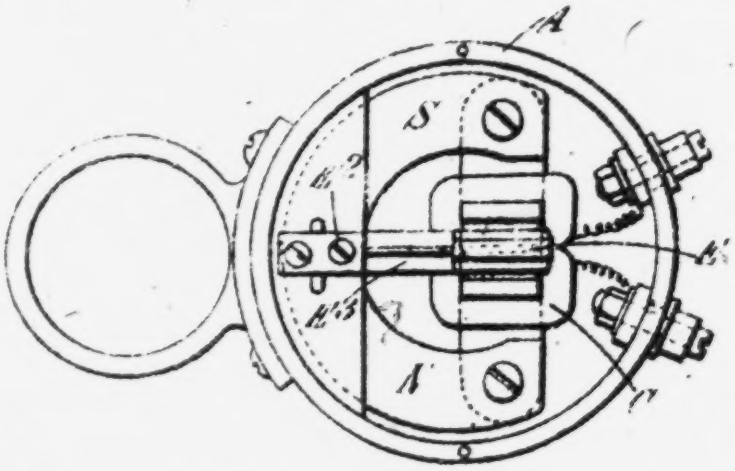

Fig. 2.

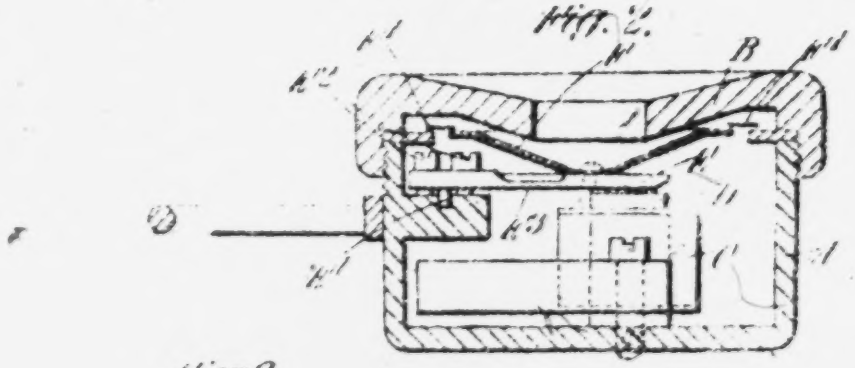

Fig. 3.

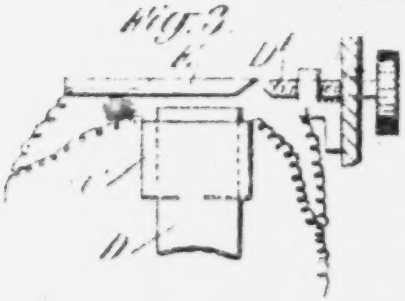

Fig. 4.

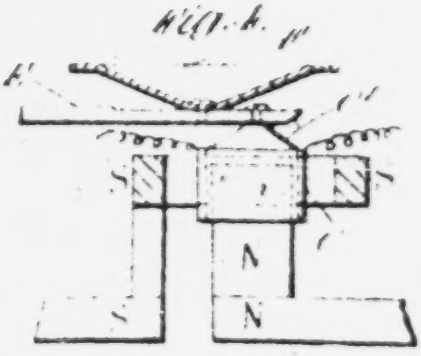
A'
A''
A'''
A'''
A'''
A'''
A'''
A'

be such that no great changes in the pressure conditions of the air are made to occur suddenly as the air vibrations travel outwards from the actual surface of the diaphragm. In other words an air space that ensures a gradual and uniform change in the pressure conditions of the air should extend not only from the broad outer end of the trumpet to the narrow end of the same or of the tone arm, but should also enable the best air conditions to be maintained between the said narrow end and the actual surface of the diaphragm. The narrow end of the trumpet or of the tone arm may be formed with a single passage leading up to the centre of the diaphragm, or it may comprise several passages the total sectional area of which is not greater than that of the single passage at the point where it branches.

In view of the comparatively large area of the diaphragm above described, the sectional area of the narrow end of the trumpet or tone arm may be proportionally large, in which case a trumpet with a straight passage would suffice to affect the necessary gradual reduction in the air pressure of the acoustic vibrations before they reach the free air. In the case, however, of a trumpet or tone arm with a narrow end of small sectional area, the passage provided might require to be objectionably long if it were kept straight whilst preserving a gradual and uniformly decreasing sectional area along it, and it may in such cases be advantageous to make the passage tortuous, one portion of it being situated within the other portion or portions.

Dated this 16th day of January, 1911.

HASELTINE, LAKE & Co.,
7 & 8, Southampton Buildings, London, England, and
60, Wall Street, New York City, U.S.A.,
Agents for the Applicant.

COMPLETE SPECIFICATION.

Improvements relating to Gramophones and the like.

I, SIDNEY GEORGE BROWN, of 4, Great Winchester Street, in the City and County of London, Electrical Engineer, do hereby declare the nature of this invention and in what manner the same is to be performed, to be particularly described and ascertained in and by the following statement:—

This invention relates to gramophones and the like the chief object being to so construct and mount the diaphragm of the usual sound box that it is extremely sensitive or responsive to vibratory influences.

In the ordinary sound box arrangements of gramophones and the like, one end of the stylus bar or lever is attached to the centre of the diaphragm and the latter is gripped peripherally, with the result that since it is not absolutely free to vibrate freely at all points on its surface its responsiveness to vibratory influences is far from being efficient; moreover it is usually comparatively heavy with the result that its inertia makes it sluggish in action.

With a view to removing some of the constraint put upon the diaphragm by reason of its peripheral mounting, it has been proposed to form it with a conical centre portion and a resilient flange portion so that the conical centre portion, the apex of which is secured to the stylus bar or lever, may vibrate as a whole; in such a construction, however, the damping and constraining action of the flange portion is in my opinion too great to ensure acoustical efficiency. It has also been proposed to transmit the vibrations of the stylus bar to the conical diaphragm through a connecting rod and to mount the diaphragm peripherally by a flexible mounting of a folding character such as

gold-beater's skin so as to ensure a movement of the diaphragm as a whole. I have found by experiment that maximum acoustical efficiency cannot be realised by merely causing the diaphragm to exercise a pumping action upon the air and that in particular a peripheral mounting should be avoided.

The solution of the problem seems to lie in causing the diaphragm to vibrate in such a way that its centre is a node and its periphery an anti-node. The vibrations that the diaphragm should in my opinion perform may be likened to those of a bell the thickness of which is reduced to such an extent that its vibrations are as large as possible in amplitude consistent with being just capable of being damped by the setting up of waves in the adjacent air. Since the centre of the diaphragm requires to be a node the diaphragm should be rigidly mounted by its centre on the stylus bar, and since the periphery requires to be an anti-node it must either be entirely free, or be connected to the casing or other stationary part by material so light and thin that no appreciable peripheral constraint is exercised. The peripheral connection between the diaphragm and the casing or other adjacent part must not be a good absorber of energy, since if it were it would damp the periphery of the diaphragm; on the other hand although it should possess resiliency it must not offer any appreciable mechanical constraint to the periphery. Consequently it must be composed of extremely thin and light resilient material.

According to the present invention, therefore, I realise the above conditions by rigidly mounting a conical or equivalently shaped diaphragm of very light weight by its centre on the usual stylus bar or lever, leaving its periphery either entirely free but very near to the casing or other stationary part, or connected to the latter by a ring of resilient material of extreme thinness,—considerably thinner than the diaphragm periphery itself,—the formation and the mounting of the diaphragm being in either case such that its centre is in a nodal and its periphery in an anti-nodal condition. The ring of material, if used, may be connected by adhesive and should have a small amount of sag in order that the diaphragm periphery may vibrate without having any appreciable drag exerted upon it by the ring. Since the diaphragm must be very light though rigid, it may conveniently be formed from aluminium or aluminium alloy, being spun from a thin disc of the same into a conical shape with a flat centre piece. The thickness should be of the order of thousandths of an inch a satisfactory average thickness being 2½ thousandths. It is advantageous for the strength to be greatest at the centre and progressively less towards the edge, and by starting the spinning operation at the edge and working towards the centre, this property of the spun disc will be naturally produced. To increase this effect, several coned discs of different diameter may be assembled together so as to form a pile. In the case of a diaphragm thus built up, the several coned discs may differ in the sharpness of their conical angles.

Owing to the shape and lightness of the diaphragm and to its being rigidly mounted by its flat centre piece it responds very sensitively to sound waves striking upon it and efficiently absorbs the energy of these waves into its substance and concentrates this energy at the centre, and since this is the part at which the support is applied the energy is transmitted with maximum efficiency to the supporting means, that is to say to the stylus bar or lever.

Conversely, in order that the diaphragm may operate to reproduce sound efficiently, it must be extremely light and thin in order that the vibrations imparted to its nodal region may travel through its substance and develop into movements of large amplitude at its anti-nodal periphery: it will be understood that if the amplitude of the vibrations travelling in the substance of the diaphragm is low, and if reflected waves are produced in its substance, as would be the case with a comparatively heavy thick diaphragm, the energy of the vibrations would not be given off to the surrounding air efficiently. It is also essential that the only support for the diaphragm should be that through which the vibrations are imparted to it. Again, it is essential for the support

to be applied at a part from which the energy of vibrations transmitted by means of the support to the diaphragm can spread out uniformly through the substance of the diaphragm. Moreover, the diaphragm, although light and thin, must be rigid, since otherwise the energy absorbed by the diaphragm becomes wasted in useless unsymmetrical and uncontrollable motions. A diaphragm constructed and mounted as above described complies with these requirements.

If the conical shape does not impart to the diaphragm all the requisite rigidity, it may also be ribbed or corrugated radially in the known manner. Some idea of the lightness of a diaphragm so formed may be gained from the fact that when it is allowed to drop to the ground, it does not fall like a mass of metal, but flutters like a leaf or piece of paper.

In order that the said invention may be clearly understood and readily carried into effect, I will describe the same more fully with reference to the accompanying drawings, in which;—

Figure 1 is a vertical section, and

Figure 2 a rear elevation of a sound box, diaphragm, and stylus lever, constructed in accordance with the invention.

A is the rear part and B the front part of the sound box, C is the diaphragm, and D the stylus lever. The cross piece D^1 carrying the stylus lever D is held against the two knife edges A^1 on the rear part A by two screws D^2 beneath the heads of which are spring washers D^3. The diaphragm C is attached to the stylus lever D at its flat centre piece, and the periphery of the diaphragm is shown connected to the sound box by the ring C^1 of extremely thin resilient material such as glazed tissue paper one three-thousandths of an inch thick or thin collodion film. The width of the annular space must either be so small that the two air regions on the two sides of the diaphragm may be considered as without communication with one another or the ring of material must be used; in the latter case the ring should be slack enough to permit of the diaphragm's movements without any appreciable mechanical constraint being put upon it. This ring instead of being connected directly to an integral part of the sound box, as shown, is preferably connected to a removable metal ring clamped between the rear and front parts. If more constraint upon the bodily movements of the diaphragm is required than is given by the stylus lever, the diaphragm and stylus lever might be secured to a blade spring fastened diametrically across the open central space of the rear part A. However, in most cases such a constraint is not necessary.

The rear part A of the sound box may be formed with several holes A^2 so that the air behind the diaphragm may not be imprisoned to such an extent as to interfere with the vibratory movements of the diaphragm.

Having now particularly described and ascertained the nature of my said invention and in what manner the same is to be performed, I declare that what I claim in connection with gramophones and the like is:

1. A very light and conical or equivalently shaped diaphragm rigidly mounted by its centre on the usual stylus bar or lever, leaving its periphery either entirely free but very near to the casing wall or other stationary part, or attached to the latter by a ring of resilient material of extreme thinness,—considerably thinner than the diaphragm periphery itself,—the formation and the mounting of the diaphragm being in either case such that its centre is in a nodal and its periphery in an anti-nodal condition, substantially as and for the purposes specified.

2. A conical diaphragm so formed or constructed as to be thickest at the centre and of decreasing thickness towards the periphery, substantially as and for the purposes specified.

3. A diaphragm formed by spinning a thin disc of aluminium or aluminium

alloy into a conical shape, the spinning being commenced at the periphery of the disc and continued towards the centre, substantially as and for the purposes specified.

4. A diaphragm built up of several cones of different diameters, substantially as and for the purpose specified.

5. Apparatus having its parts constructed, arranged, and adapted to operate, substantially as hereinbefore described with reference to the accompanying drawings for the purposes specified.

Dated this 17th day of July, 1911.

HASELTINE, LAKE & Co.,
7 & 8, Southampton Buildings, London, England, and
60, Wall Street, New York City, U.S.A.,
Agents for the Applicant.

[This Drawing is a reproduction of the Original on a reduced scale.]

Fig. 2.

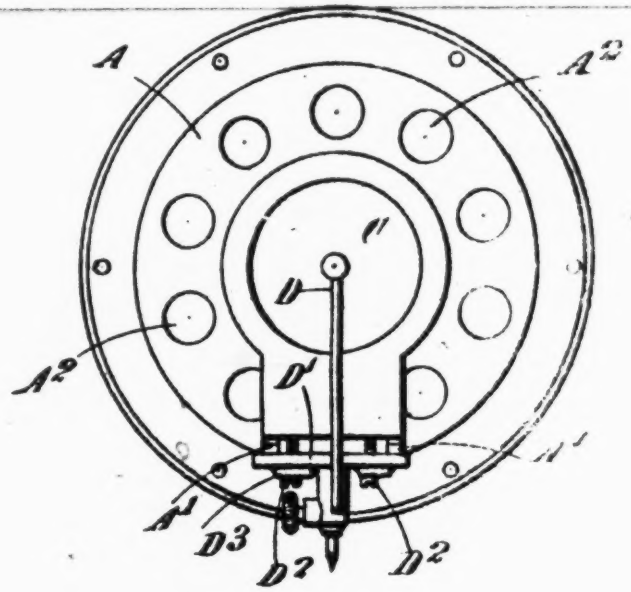

Fig. 1.

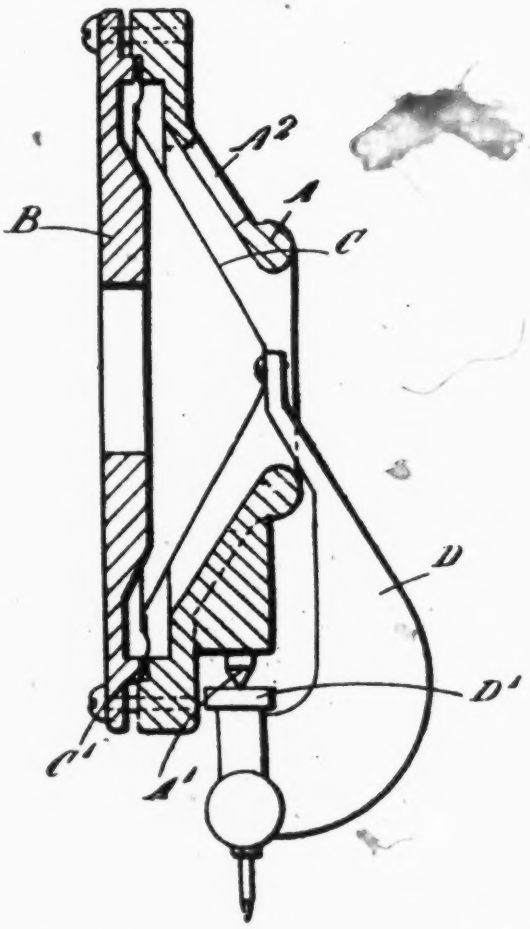

Also I may use differentially-wound or other transformers for the purpose of communicating electrically between each microphone and the receiving or vibrating coil of the next in the series. The vibrating coils may be wound of fine wire compacted together with cement such as shellac, or they may be of metallic ribbon when extra low resistance is desired.

Furthermore for the purpose of a "call," a tone-telephone such as a tuning fork or other persistent vibrator mounted on a sound board may be employed as the last of the series of telephone relays, so as to respond powerfully when alternating currents of its own frequency are excited at the distant station.

For the purpose of discriminating between a number of call stations a combination of differently attuned forks or tone-telephones may be arranged instead of one, so that each shall respond strongly only to its own note and thus indicate the particular station which is desiring to signal. The receiving or collecting circuit may likewise in some cases be attuned to a definite note. At the sending end a battery connected to an acoustic arrangement, such as a reed, or a string or other rapid intermitter or reverser of current, may be used to stimulate a circuit containing both capacity and self induction, so that it shall be thrown into strong electromagnetic vibration.

Dated this 27th day of April 1898.

A. F. SPOONER,
323, High Holborn, London, Agent for the Applicant.

COMPLETE SPECIFICATION.

Improvements relating to Telephones, and to Circuit Arrangements and Relays therefor.

I, OLIVER JOSEPH LODGE, F.R.S., D.Sc., of 2, Grove Park, Liverpool, in the County of Lancaster, Professor of Physics in University College, Liverpool, aforesaid, do hereby declare the nature of this invention and in what manner the same is to be performed, to be particularly described and ascertained in and by the following statement:—

The chief objects of my invention are to provide means for the audible detection of extremely feeble fluctuating electric currents, such for instance as may be caused in a closed, or practically closed, circuit, by another very distant circuit supplied with alternating currents; to magnify the telephonic effect of feeble currents by successive specially-designed relays until the sound is sufficient to act as a "call" summoning the operator to attend to receive the message; to magnify the telephonic effect of speech so that conversation transmitted round one circuit may be heard inductively in a different circuit provided with proper instruments; and generally to improve the conditions under which telephony is carried on so as to magnify every fluctuation of current and thus produce a loud sound from a feeble stimulus for any useful purpose.

For the purpose of detecting or manifesting any feeble alternating or intermittent current, whether excited microphonically or inductively or otherwise, I construct a special kind of telephone or relay, the main features of which are depicted in the annexed drawings. It consists of a coil of insulated wire or metal ribbon a supported freely by an elastic spring b (Figure 3) or by one prong of a tuning fork b^1 (Figure 2) in a strong magnetic field produced by an electromagnet or permanent magnet c of which one pole c^1 is inside the coil while the other pole or keeper c^{11} is outside and surrounding it. The coil is constructed of light materials well cemented or fixed together so as to move as a rigid body, and whenever an alternating current passes round it, it is thrown into bodily vibration, and

transmits these vibrations mechanically to whatever is connected to it. The said coil may be attached in any light and rigid manner to a sound board *d* (Figure 1) or to the diaphragm d^1 (Figure 7) of a microphonic transmitter, or it may carry a piece of graphite, carbon, or other suitable substance d^{11} (Figures 2 and 3) so that the sound board, the diaphragm, or the carbon, receive the mechanical vibrations.

The object of transmitting the vibrations to the sound board *d* is to make them directly audible. The object of transmitting them to the microphonic carbon granules or pellet is to actuate a kind of microphonic relay which by throwing into intermittent action the current from a local battery shall greatly magnify the intensity of the originally received disturbance.

The sound-board receiver is depicted in Figure 1, where *e* is a thin aluminium or other light cone or tripod connecting the vibrating coil *a* rigidly to the sound board *d*, which may be of large size and may have a number of similar coils attached to it in various parts. For instance it might form the ceiling or wall of a public hall: and the alternating current originally received by the several coils would in that case be caused by the voice of a speaker directed towards any form of microphonic transmitter capable of distinct articulation.

In the case of Figure 1 the sound board *d*, or in the case of Figure 7 the diaphragm d^1, itself constitutes the elastic support of the coil *a* and dispenses with the necessity of the separate spring such as that shown at *b* in Figure 3. Only one end of the keeper c^{11} is shown in Figures 1 and 2; the side of it is indicated in Figure 3, and it continues to the other pole of the magnet which it similarly surrounds as shown in Figures 5^x and 5^y. In all these figures, the keeper is supported rigidly from the pole by means of a brass collar and plate *f*.

A form of magnet is shown in Figure 4 (which represents a plan and elevation respectively) where the keeper c^{11} is a round plate of soft iron pierced with holes for the reception of four poles like c^1 and where c_0 is a bundle of hard steel magnets, joined to the four rods c^1 by an iron base plate c_3. Or else, as an alternative arrangement, the whole is of soft iron and the space *g* surrounding the central shaft is filled with wire, constituting it an electromagnet. Thus a magnet with four pole pieces like c^1 and four annular air gaps or inter pole spaces a^x to receive four vibrating coils such as *a* shown in the other figures is produced.

Figures 5 and 5^x illustrate in plan: Figure 5^y in side elevation: and Figure 5^z in vertical section, an alternative form of steel magnet and its keeper. The magnet is one of ordinary horseshoe shape with two poles *c* and soft iron pole pieces c^1 surrounded by a soft iron keeper c^{11} attached rigidly by the brass collar-plate *f* to the pole pieces.

The coil *a* instead of being attached to a metal diaphragm held near the ear, or to a sound board as described, may in the first instance be mechanically attached to the diaphragm of a granular microphone as shown in Figure 7 or to some other microphonic arrangement fed by a local battery and having in its circuit (through a transformer or otherwise) another telephone as shown in Figure 6, which may be either of any usual pattern or of the above described new pattern with vibrating coil. This second movable or trembling coil may thus actuate by mechanical means another microphone which, through the energy of its relay battery, may powerfully disturb a third telephone, and this again if necessary a fourth and so on. The whole arrangement is depicted in Figure 6 where the concluding telephone of the series is indicated in two alternative forms either of which may be switched on by the switch *m*. By this means any required degree of magnification can be obtained, for I find that a coil thus moving as a whole in a magnetic field (otherwise maintained) is very suitable for communicating its tremors to a microphone-transmitter whether of special or of any customary form: being much more effective for this purpose than the ordinary iron diaphragm receiver which vibrates in parts and is under considerable constraint. The final instrument of the series is usually a loud speaking iron disc or diaphragm telephone of some ordinary pattern suitable for imparting vibrations to the air and so on to the ear; or it may

be an electro-dynamometer or a Langdon-Davies phonophoric receiver, or other instrument, for example, that shown in Figure 8, whereby the vibrations are enabled through a relay to work Morse or other telegraph instruments.

I may use this plan of magnification as a call, or as a receiver in magnetic telegraphy, but it is obviously applicable to other useful purposes such as magnifying a speaker's voice by distributing it to various parts of a large hall.

The main features of the microphonic relay or magnifying telephone are shewn in detail in Figures 2 and 3, where the vibrating carbon d^{11} is in light contact (it is shown separated in the figures for clearness) with another piece of carbon or other electric conductor h which is firmly held and adjusted by a thumb screw i working in a suitable support j. It is to be understood that the support j and the spring b or the prong of the tuning fork b^1 are to be connected to a local battery circuit which shall also be connected either directly or through a transformer with the coil of another second receiving telephone. This second telephone thus supplied with intermittent or alternating currents of magnified intensity may be a telephone of ordinary pattern, or it may be a vibratory coil telephone like Figure 1, or it may be another relay telephone like Figures 2 and 3 or like Figure 7 which then in turn magnifies further and operates another telephone, and so on.

Figure 6 serves to show the connexions for such a series of magnifying telephones, or telephone relays. In that figure the coil and condenser indicated at A B represents subject matter described in the Specification of another Application for Letters Patent filed by me and numbered 29,505 dated 13 December 1897, though it may be replaced by any other transmitting or collecting apparatus: for instance this original current fluctuator might be an ordinary microphonic transmitter operated by the voice. The Roman numerals I, II, III and IV represent a possible arrangement of the receiving and magnifying apparatus. No. I is a relay telephone like Figure 2 or Figure 3 with a vibratory coil varying the microphonic contact of the carbons d^{11} and h, one of them being supported by the spring b. No. II is another relay telephone like Figure 7 adapted to stronger currents, with its vibratory coil varying the microphonic contacts in a granular transmitter with its thin carbon diaphragm d^1 and carbon base h^1. No. III is a loud-speaking telephone consisting of a vibratory coil and sound board, like Figure 1. No. IV represents another form of loud-speaking telephone, alternative to the last, where a vibratory diaphragm disturbs the outer air through a concentrating funnel. The magnet in Nos. I II and III is supposed to be an electromagnet shaped like Figure 4, but with only a single air gap surrounding the central shaft C_6 which is wound with a magnetizing helix and surrounded by an outer iron cylinder instead of the four rods c^1 of that figure. The magnet of No. IV is supposed to be more like the horseshoe pattern of Figures 5 to 5°: or it may be any known form of loud-speaking telephone. Electrical connection between I and II and between II and III is effected by means of the transformers k_1 and k_2: l_1 and l_2 are the local batteries, of which l_2 is permissibly stronger than l_1, because of the many contacts in the granular microphone d^1 h^1. Instead however of the speaking telephone No. III a modification called a "call telephone" may be employed. The design of this is depicted in Figure 8 where the coil, suspended as before in a field due to the magnet c by the rigid light connector e, operates the limb of a spring or of a tuning fork b^1 clamped to the pillar n and carrying an adjustable counterpoise o for the purpose of equalizing the load on both prongs, and also permitting a slight range of tuning. The studs p and q are platinum, lightly in contact, the upper one q being held by the thin spring r and adjusted by the thumb screw i. The pillar j supporting this spring is insulated, as for instance by the ebonite s, and thus n and j can be connected to a local battery circuit containing an ordinary relay the tongue of which is just held over by the current across the junction p, q so long as that junction is undisturbed. But directly the fork trembles, the contact between p and q is practically broken or greatly enfeebled, by the dancing of the light spring r on the heavier spring b^1, and accordingly the tongue of the

relay in circuit with p, q (that is with n, j) moves over and completes the circuit of an ordinary electric bell or it may work a Morse instrument.

For the purpose of discriminating between a number of "call" stations a combination of differently attuned forks or tone telephones may be arranged, instead of one, so that each shall respond strongly only to its own note and thus indicate the particular station which is desiring to signal. The receiving or collecting circuit may likewise be attuned to a definite note, as detailed in the specification of my said prior application.

Whether the spring b or the tuning fork b^1 is employed as the elastic support for the coil in any case is optional, but whenever precision of tuning is desired, so that the receiver shall respond to one particular frequency of distant impulses and not to others, I prefer the tuning fork: and in that case it would be preferable to make Nos. I, II and III of Figure 6 all tuning-fork telephones. But where many notes, or where speech is desired to be received and magnified, then either a spring or a diaphragm or some other elastic support can be used. Further I find that a microphone acts best when a certain strength of current is passing through it: so whenever the receiving telephone is of too high resistance to permit this strength of current to flow in simple circuit with it I shunt the telephone by means of a low resistance self-induction or choking coil which conducts the main part of the steady current but diverts the variations of current through the telephone. On a long line a transformer is the natural mode of achieving this object but on a short or purely local line I find the choke shunt preferable.

To enable a fairly strong current to be sent through a microphonic transmitter without over-disturbing a telephonic receiver, I shunt the latter out by a self-induction or choke coil t, as indicated in Figure 9, where the transmitter b^1 is shown operated by one of the vibrating coils a as in Figure 7 but its telephonic receiver is shunted by the coil t, whereby the steady current is mostly conveyed, while its rapid fluctuations mostly go through the telephone. To assist the fluctuation to go through the telephone, I place a condenser u in series with it as shown in Figure 10. This has the effect of strengthening oscillations of some particular frequency in especial, and of all frequencies not too far removed from that.

It is to be understood that the microphone transmitter may be worked by the voice or by any other usual arrangement, and is not limited to the disturbance by attached coils.

Whenever a temporarily inoperative microphone is in circuit with a telephone (as for instance the ordinary transmitter belonging to a local receiver during the reception of a distant message), an accidental noise, a grating or hissing, is usually going on in the telephone. This can be diminished by shunting the telephone with a condenser v, as indicated in Figure 11, an arrangement which is advantageous in some forms of ordinary voice telephones, as it diminishes the disturbing noise from the local transmitter while the desired message from a distant transmitter is being listened to.

This and the other methods mentioned, though specially applicable to such pure-tone-telephony as is appropriate for Morse signals, can also be used with speech-telephony under certain conditions.

Having now particularly described and ascertained the nature of my said invention and in what manner the same is to be performed, I declare that what I claim is:—

1. A telephone having a coil freely supported in a magnetic field upon an elastic spring or its equivalent substantially as and for the purposes set forth.

2. In a telephone, the combination of a coil freely supported upon an elastic spring or its equivalent with a magnet one pole of which is inside the coil while the other pole is outside and surrounding it substantially as and for the purposes set forth.

3. The method, substantially as set forth, of attaining forcible mechanical or acoustic vibrations from fluctuating electric currents by a telephone consisting

of an elastically suspended movable coil, suspended in an annular or other suitable magnetic field, and connected with a sound board, or its equivalent.

4. The method, substantially as set forth, of magnifying feeble mechanical vibrations electrically received by means of a vibrating coil so arranged as to operate a microphone or microphonic transmitter whose current serves to work another telephone.

5. The combination of a series of telephones and microphones connected alternately electrically and mechanically, so that each telephone receives a disturbance electrically from the preceding microphone and passes it on mechanically in magnified intensity to the next microphone, while each microphone receives a disturbance mechanically from the preceding telephone (or in the case of the first of the series possibly from the voice direct) and passes it on electrically to the next telephone of the series.

6. The microphonic relay or magnifying telephone constructed substantially as described with reference to Figures 2 and 3 of the accompanying drawings.

7. A magnet with one or more inter pole spaces each containing a suspended coil of wire arranged to receive fluctuating currents and thereby to be thrown into vibration substantially as described with reference to Figure 4, or to Figures 5, 5^A, 5^B, and 5^C of the accompanying drawings.

8. As a telephonic "call," a light metallic contact in a local relay circuit arranged so that it dances on an elastic vibrator and thereby changes in electrical resistance when the vibrator is excited by means of fluctuating currents sent round an attached coil suspended in a magnetic field substantially as described with reference to Figure 8 of the accompanying drawings.

9. In a telephonic arrangement, the combination of a magnet, a mechanically vibrating coil surrounding one of its poles, a microphone, and a telephone or its equivalent substantially as and for the purposes set forth.

10. In combination, a tuning-fork or reed and a vibrating coil substantially as and for the purposes set forth.

11. In combination, a tuning fork or reed, a vibrating coil and a loose contact attached to the tuning fork for the purpose of operating a relay and so furnishing a "call" substantially as set forth.

12. In a telephonic circuit the choke coil t substantially as and for the purpose set forth.

13. In a telephonic circuit the condenser v substantially as and for the purpose set forth.

14. The combination, in a telephonic circuit, of the choke coil t and the condenser u substantially as and for the purpose set forth.

Dated this 13th day of December 1898.

A. F. SPOONER,
323, High Holborn, London, Agent for the Applicant.

Redhill: Printed for Her Majesty's Stationery Office, by Malcomson & Co., Ltd.—1899.

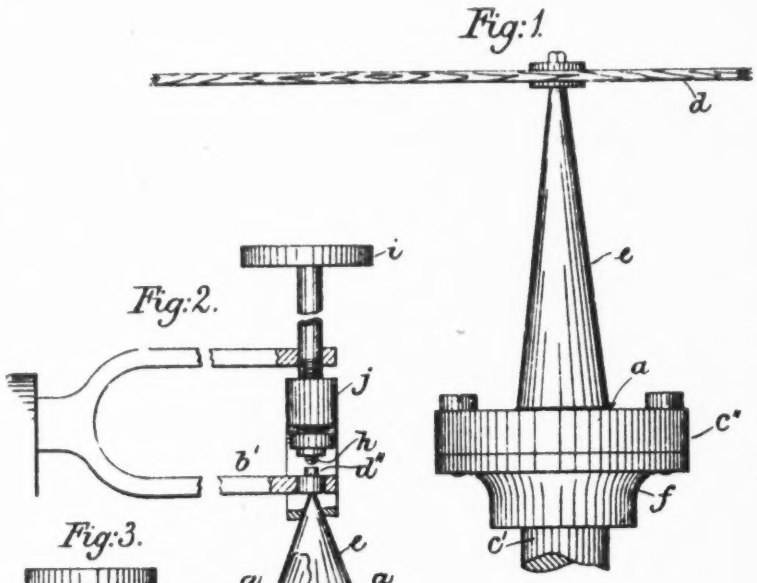

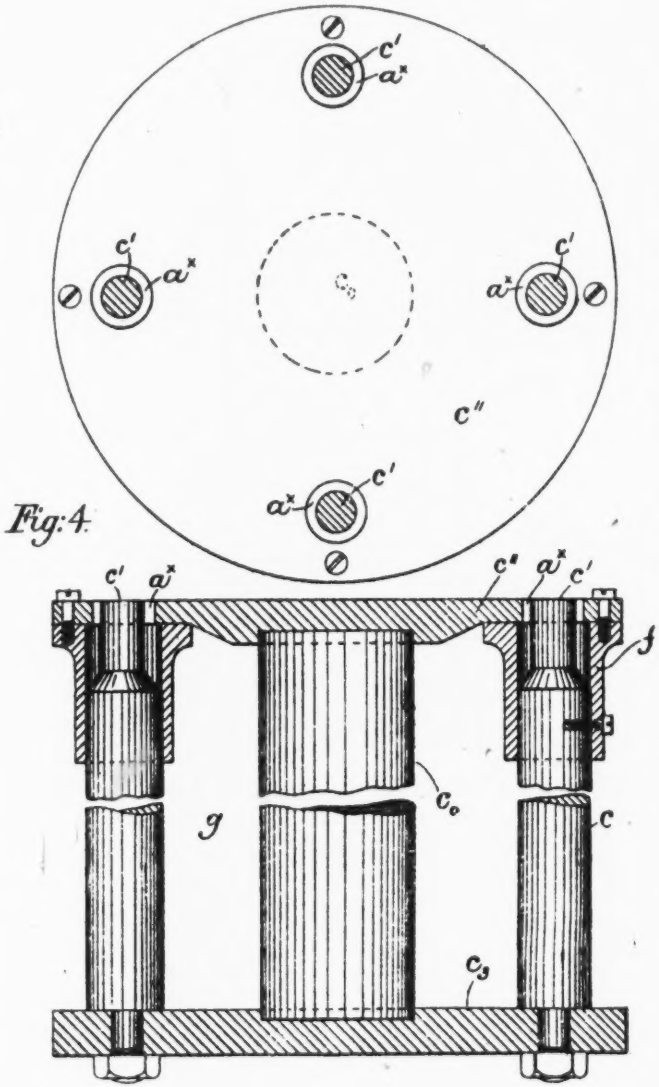

[This Drawing is a reproduction of the Original on a reduced scale.]

Malby & Sons Photo-Litho

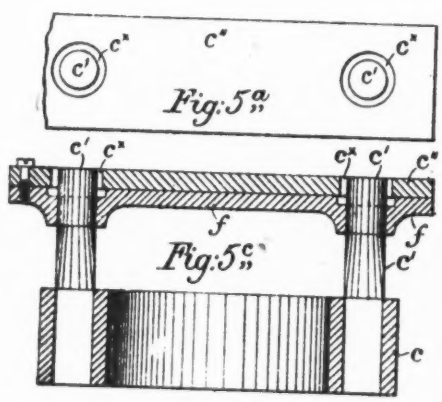

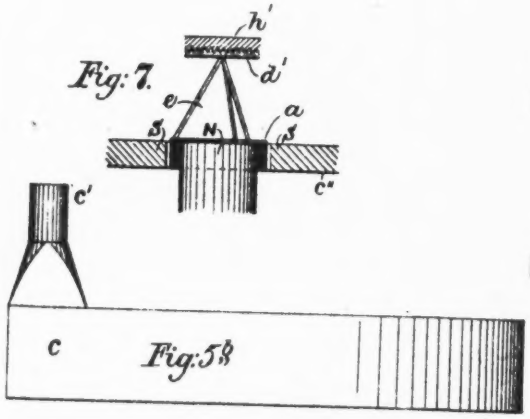

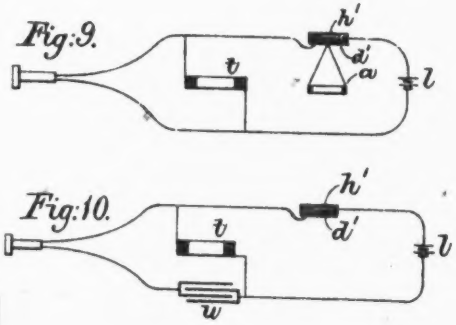

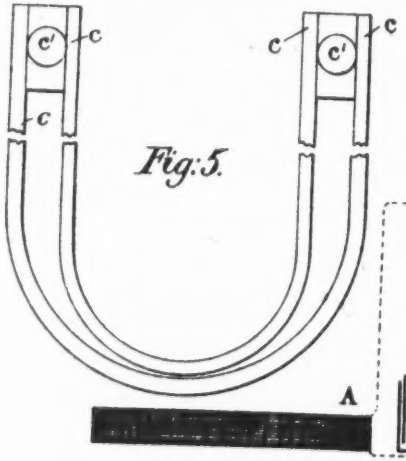

Fig:6.

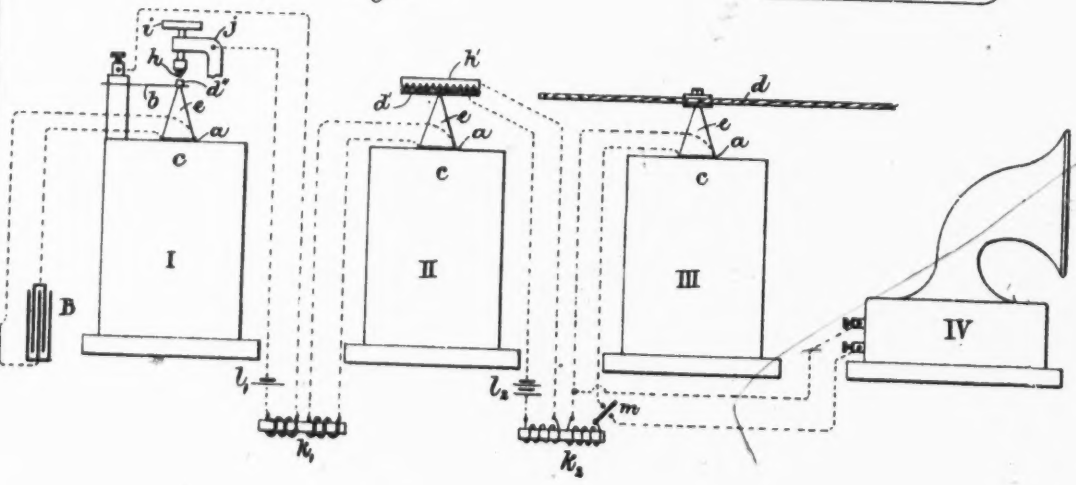

[This Drawing is a reproduction of the Original on a reduced scale.]

Harrison & Sons, Photo-Litho 10 2

A.D. 1898. April 27. N.º 9712.
LODGE'S Complete Specification.

(3 SHEETS)
SHEET 3.

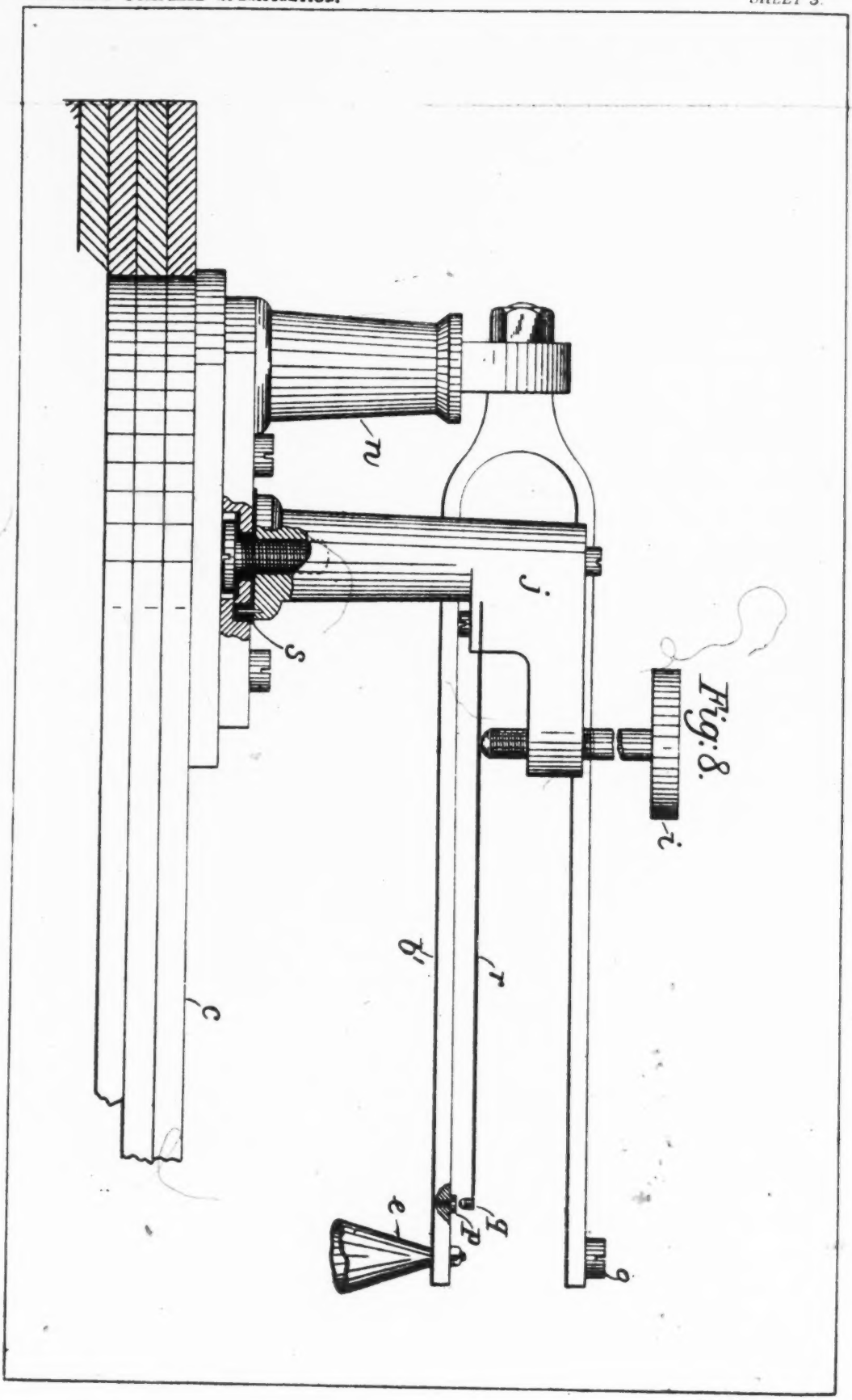

Fig. 8.

[This Drawing is a reproduction of the Original on a reduced scale.]

Malby & Sons, Photo-Litho.

THE "VIBRATOPHONE": A NEW PHONOGRAPH.

By Sydney G. Starling, B.Sc., A.R.C.Sc., F.Phys.S., and W. Cole, F.L.S.

We have devised a new form of phonograph which appears to be of sufficient scientific and general interest to merit a description in the pages of the Talking Machine News. The attachment was originally intended for use with a Pathé "Perfecta," and it is so simple that it may be made in half-an-hour at a cost of material that can only be reckoned in farthings.

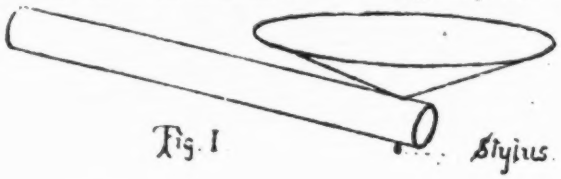

Fig. 1

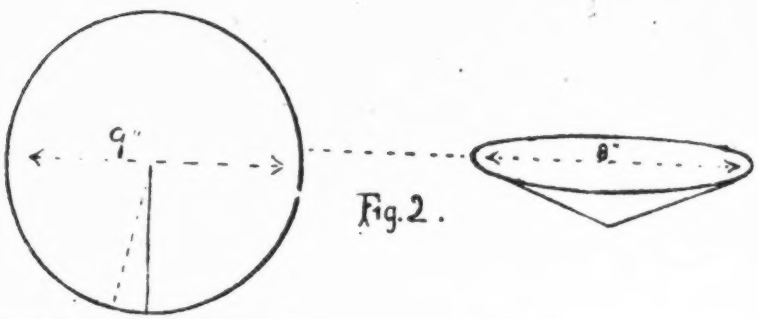

Fig. 2.

It consists of a low cone of cartridge drawing-paper 8 inches in diameter, and about 2½ inches high. This may easily be obtained by making a circle of the paper and cutting out a segment, as shown in Fig. 1, then bending the cone into shape, and securing with wax or cement. This paper cone is attached at the apex with wax or seccotine to a tube of millboard or cardboard, such as those sold by stationers for posting drawings and maps. This tube may be about 2 inches in diameter, and for fitting to the "Perfecta" it should be at least 12 or 13 inches long. The tube is open at both ends, and at the end immediately under the point of the paper cone, but, of course, on the opposite side of the tube, is fixed with wax or other cement a ball-stylus or sapphire. Our styli are made from thin rods of glass drawn out and fused in a spirit lamp, so as to form a thin thread of glass with a little spherical end, care being taken to get the ball of the right size, and with perfectly polished surface. A real sapphire stylus would doubtless be best.

Near the other end of the cardboard tube a hole is drilled to allow of the insertion and screwing fast of the little jointed rod by which the horn of the "Perfecta" phonograph is balanced on the guide-rod of the Orpheus attachment. The construction and mode of fixing up our device will easily be followed by an inspection of figures 2 and 3.

Some little judgment must be exercised in fitting up the apparatus to allow the tube to travel on the record from end to end without touching the wires of the Orpheus attachment.

Our object in the first place was to produce a diaphragm which should be large and rigid enough to set sufficient air in vibration to produce audibility without the intervention of a trumpet; our paper cone must be looked upon as a modified diaphragm and not in any sense a trumpet. It was intended in this way to avoid the distortion of the sound waves which

Fig. 3.

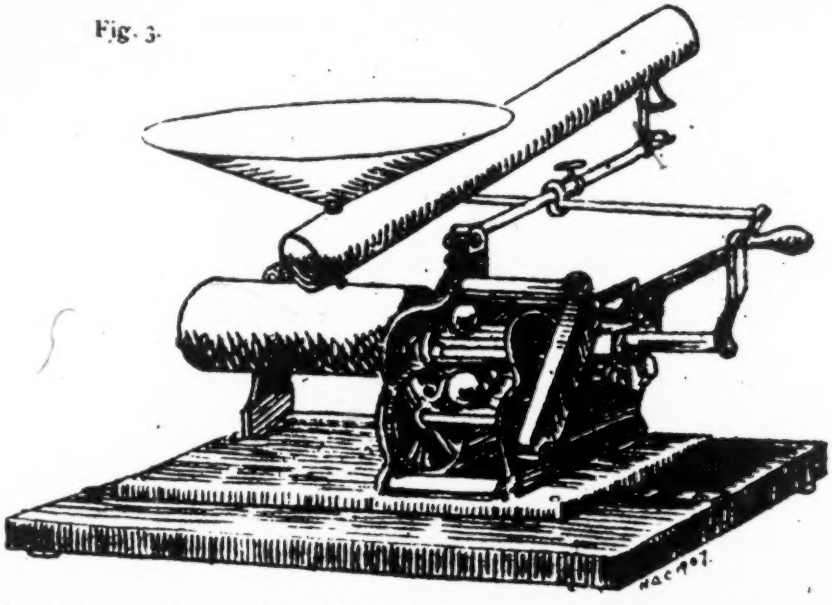

must occur in the cavity of the reproducer and horn, which cavity has such a complex shape that it is almost impossible that all the overtones of any note or sound should be reproduced with their intensities in the same proportion as in the original sound. In fact the cone in our arrangement behaves to the record and the style as the sounding board behaves towards a vibrating string. If the board is rigid and encloses no complex air space its vibration is a good copy of the vibration of the string; it merely serves to set more air in motion than the string alone could do. Thus our cone must have only sufficient curvature to give it rigidity. A perfectly rigid weightless plane would be an ideal form for the cone to take. The cardboard cylinder forms a convenient and efficient support for the cone, but whether it plays any acoustical part in the reproduction is an open question.

The sound, though much less intense than that produced by the ordinary method, is yet very pleasing and correct. The result is particularly good with low volume "home records," and to our ears the characteristics and timbre of the reproduction are pure and natural.

Although our experiments have been made with the "Perfecta" it would be easy to adapt the "Vibratophone" to other styles of machines. We appear to have selected roughly good sizes of cone and tube, still there is doubtless room for experiment in the selection of diameter and length. Celluloid and cardboard have been tried for making the cone, but in our experience paper is by far the best material.

The "Vibratophone" (to christen the little device) appears to have some practical uses beyond its scientific interest. It would serve excellently to try over records without disturbing others in the house when they need to be repeatedly played as in the study of folk-songs and language lessons by aid of the phonograph.

FORTHCOMING REDUCTION IN PRICE OF THE EDISON RECORD

DEFENDANT'S EXHIBIT NO. 27.
Service Bulletin No. 1, Victor Talking Machine Company, December 16, 1927.

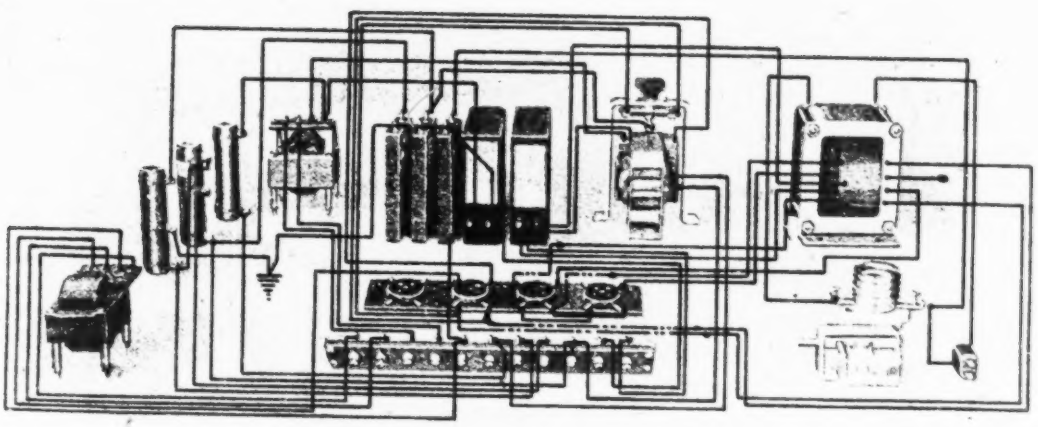

Parts and Wiring of Power-Amplifier Units
AP-947-A, 951-A, and 997-A
(Used in 9-25 and 9-55)

DEFENDANT'S EXHIBIT NO. 28.
Service Bulletin No. 1, Victor Talking Machine Company, October 27, 1927.

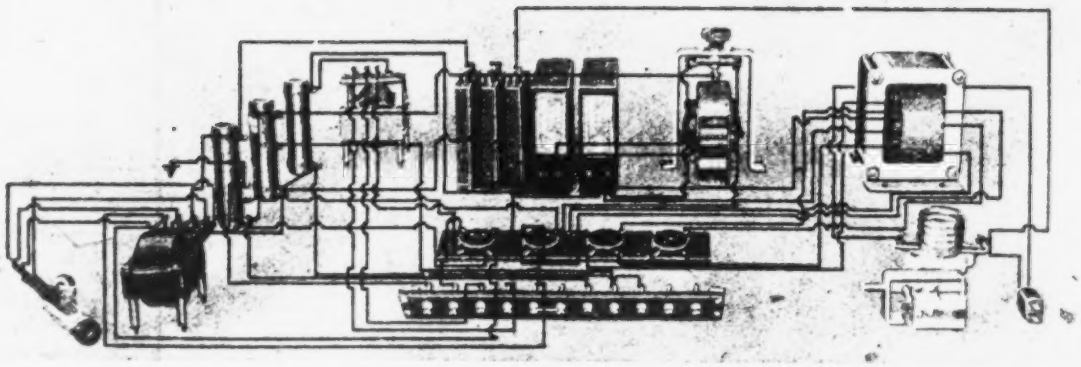

Fig. 8. Parts and Wiring of Power-Amplifier Unit AP 997 (RPA 5 Special)
(Used in 8-60)

DEFENDANT'S EXHIBIT NO. 38.
Chart of Frequency Vibrations of Music Notes.

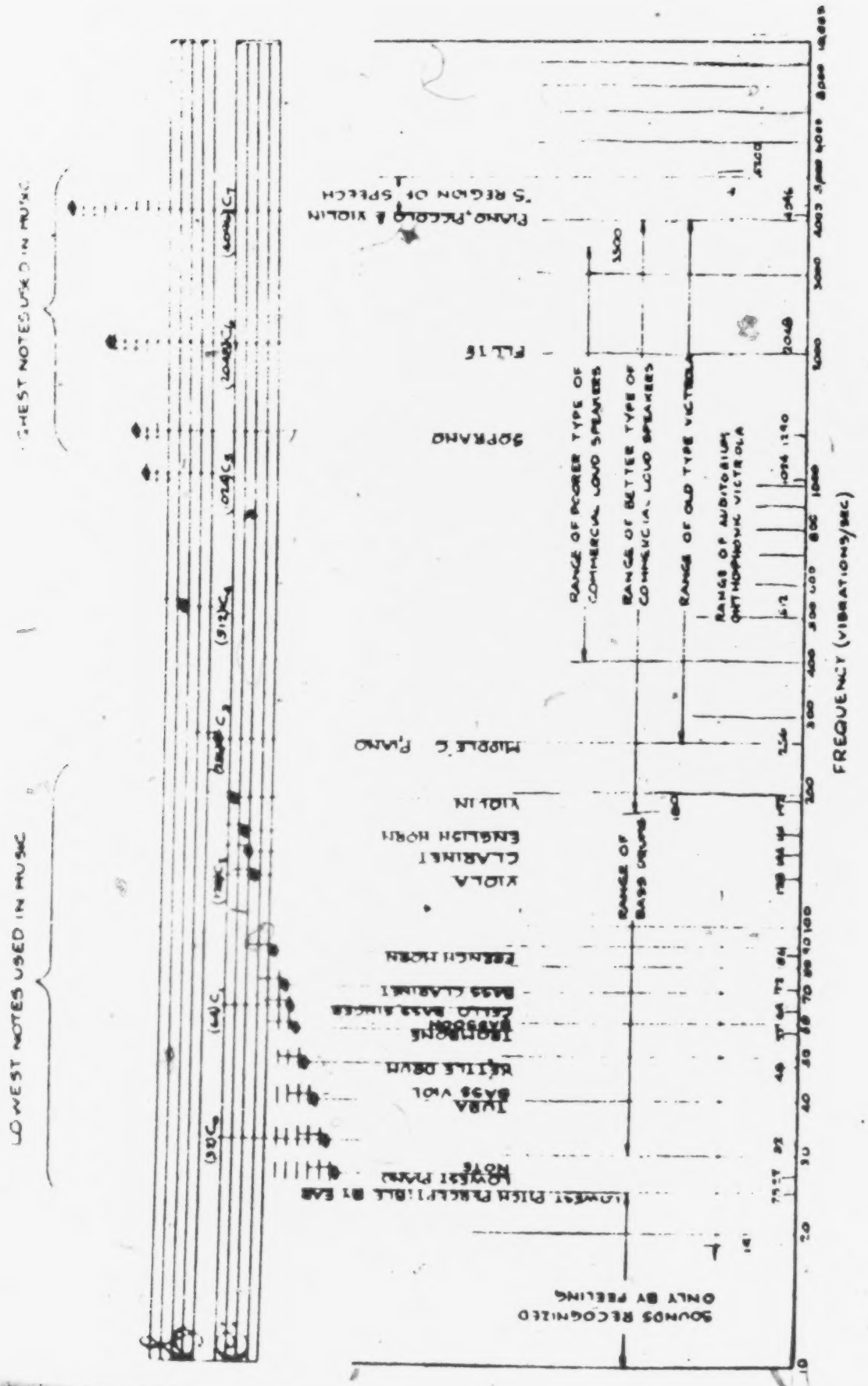

W. O. WATTS & J. W. MAXWELL.
Mechanical Telephone.

No. 237,712. Patented Feb. 15, 1881.

Fig. 1.

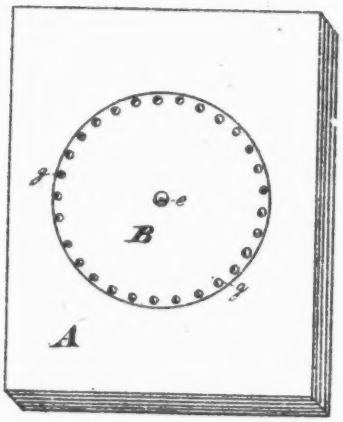

Fig. 2.

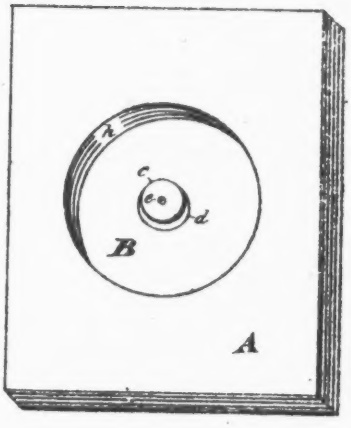

Fig. 3.

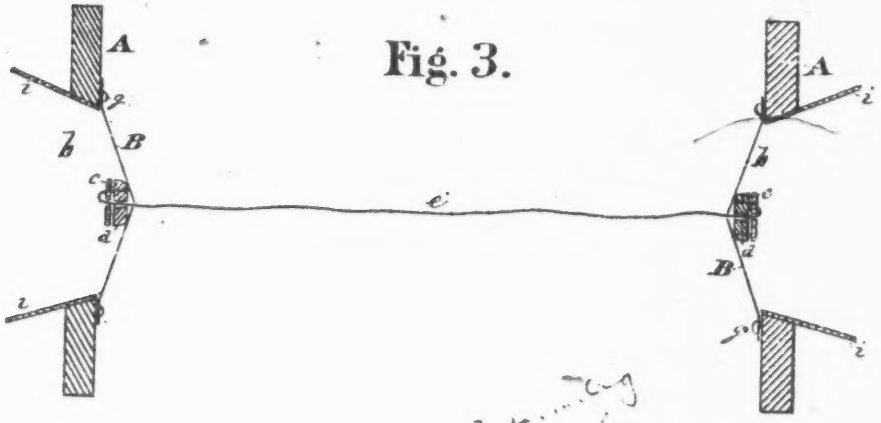

Witnesses:
A. H. Jackson
Wm. L. Jackson, Jr.

Inventor:
W. O. Watts,
J. W. Maxwell, by
A. M. Stout, their atty.

UNITED STATES PATENT OFFICE.

WILLIAM O. WATTS AND JOSEPH W. MAXWELL, OF LOUISVILLE, KY.

MECHANICAL TELEPHONE.

SPECIFICATION forming part of Letters Patent No. 237,712, dated February 15, 1881.

Application filed August 3, 1878.

To all whom it may concern:

Be it known that we, WILLIAM O. WATTS and JOSEPH W. MAXWELL, of Louisville, county of Jefferson, and State of Kentucky, have invented certain Improvements in Telephones, of which the following is a specification.

Our invention relates, generally, to an improvement in mechanical telephones or telegraphs designed for the transmission of articulate and other sounds to distant points; and it consists of the means and appliances hereinafter described, which accomplish the object by collecting, focalizing, and delivering vibrations upon a metal wire, which conducts them to the distant points and delivers them by devices exactly similar to those by which they were received.

Our invention consists, first, in the combination, in a mechanical telephone or telegraph apparatus, of a hollow conical or funnel-shaped diaphragm and a sound-conducting wire attached to and leading outwardly from its apex, as hereinafter more particularly described and explained; second, in the combination, in a mechanical telephone or telegraph apparatus, of two suitably-supported hollow conical or funnel-shaped diaphragms with a wire extending outwardly from and connecting their apexes; third, in the combination of a diaphragm, a conducting-wire extending through said diaphragm and having a button or enlargement at its end, and a washer interposed between the button and the diaphragm, all as hereinafter more fully described and explained.

In the accompanying drawings, Figure 1 is a rear view of the sound collecting, transmitting, and delivery apparatus. Fig. 2 is a front view of the same. Fig. 3 is a sectional view, showing a line-wire with one of our improved instruments connected to each end thereof.

A A are the sounding-boards; *b*, the circular openings in them. B B are the sound-developers; *e*, the conducting-wire; *c*, the buttons; *d*, the leather buffers, and *i i* the auxiliary tubes.

Of course the conducting-wire, when very long, must be supported at intermediate points to prevent sagging and swaying to and fro; but these are mechanical details which constitute no part of our invention.

The concave of each sound-developer is placed outward and is the front, and air-vibrations may be received in the concave of either and delivered from the concave of the other.

The wire *e* may be tightened and held taut by a device in the form of a common spool for thread having side bars attached to its flanges. To use it one end of the wire may be inserted through a hole in the stem or cylinder of the spool, and then the spool may be revolved until the wire is sufficiently taut, and then to hold it so another bar may be placed between these side bars and the wire itself.

Our theory of the operation of the parts of our improvement is that the material itself of the sounding-board, from its capacity of vibration, aids in producing the desired effect, and the form of the openings and the walls of the same have the like effect, and that the material of the sound-developer—sheep-skin, for instance—is quite important, on account of its hardness, smoothness of surface, and lightness, and its elasticity, and the protuberant or convex form is also highly important, as it serves to concentrate and focalize the vibrations together at about the same point on the wire, and has a similar effect upon the transmitted vibrations in delivering them to the ear of the hearer at the other end of the line with fidelity and distinctness. The funnel-shaped tubes *i i*, when used, will increase the efficiency of the other devices. They may be made longer or shorter than shown in the drawings, and their front ends may be flared more or less, as may be found desirable.

No extraneous force is used in the transmission of sounds by our apparatus, and we have found by repeated experiments that it will transmit several hundreds or thousands of feet not only articulated words with distinctness, but even the peculiarities of voice of the speaker, so that the voice may be recognized.

What we claim as our invention, and desire to secure by Letters Patent, is—

1. The combination, in a mechanical telephone or telegraph apparatus, of a hollow conical or funnel-shaped diaphragm and a sound-conducting wire attached to and leading outwardly from its apex, substantially as described.

2. The combination, in a mechanical tele-

phone or telegraph apparatus, of two suitably-supported hollow conical or funnel-shaped diaphragms, with a wire extending outwardly from and connecting their apexes, substantially as described.

3. The combination of a diaphragm, a conducting-wire having a button or enlargement at its end, and the washer interposed between said button and diaphragm, substantially as and for the purpose set forth.

WM. O. WATTS.
W. MAXWELL.

Witnesses:
HENRY C. UNDERWOOD,
R. M. BUCKLEY.

DEFENDANT'S EXHIBIT No. 40.

W. H. DAVIS AND F. E. JOSS.
PHONOGRAPH TRANSMISSION.
APPLICATION FILED MAY 9, 1918.

1,312,958.

Patented Aug. 12, 1919.

2 SHEETS SHEET 1.

Fig. 1,

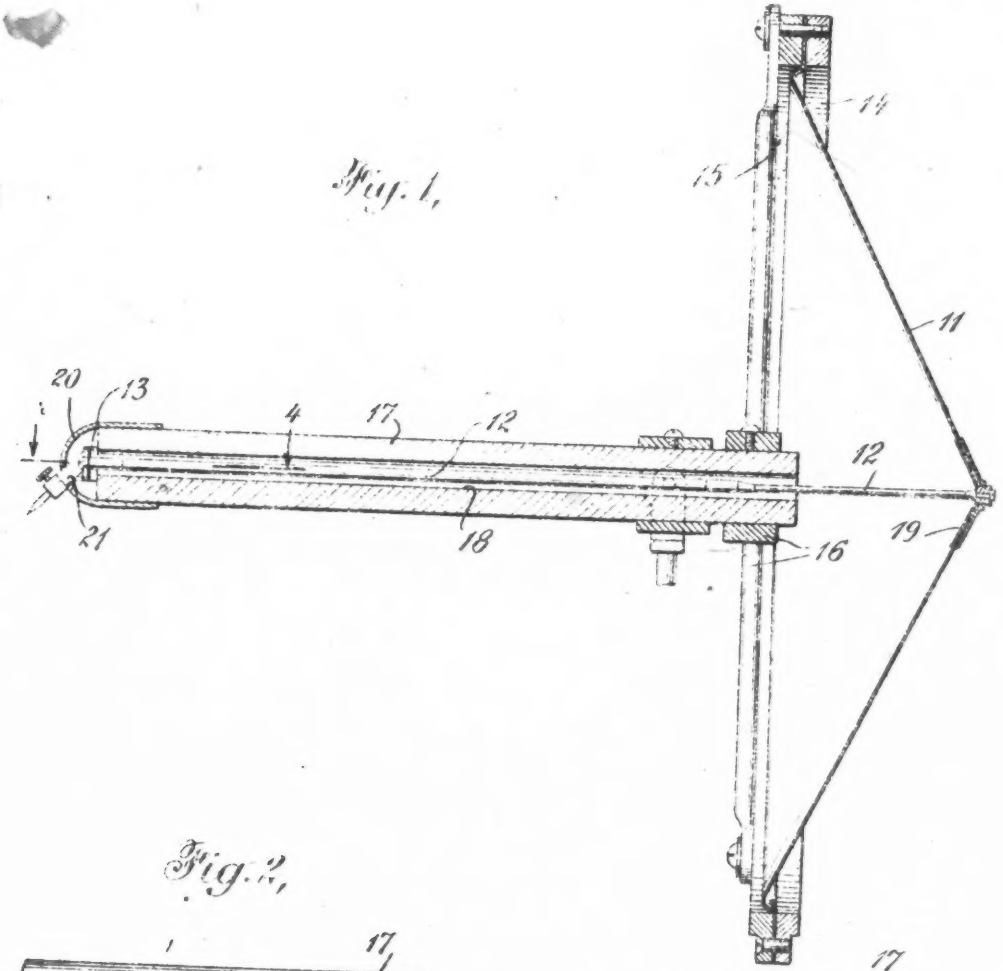

Fig. 2,

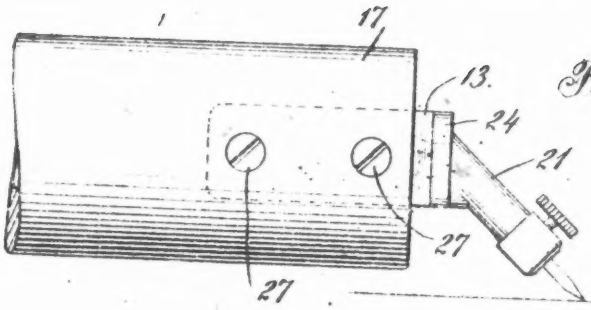

Fig. 3,

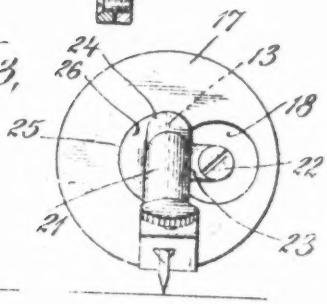

INVENTORS
William H. Davis & F. E. Joss
BY
Howson & Howson & Edmonds
ATTORNEYS

W. H. DAVIS AND F. E. JOSS.
PHONOGRAPH TRANSMISSION.
APPLICATION FILED MAY 9, 1918

1,312,958. Patented Aug. 12, 1919.
2 SHEETS SHEET 2.

Fig. 4,

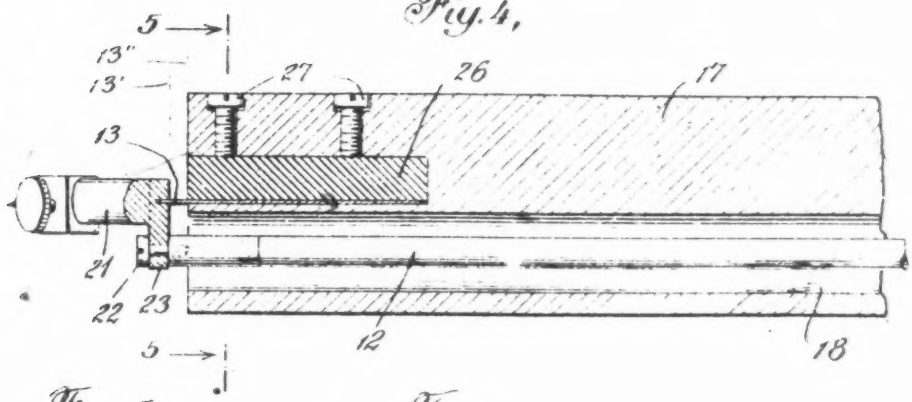

Fig. 5,

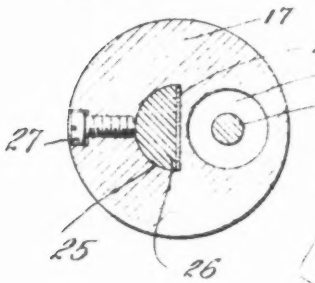

Fig. 6,

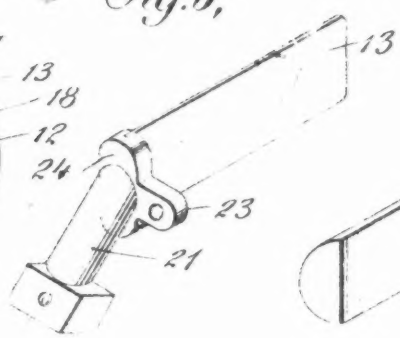

Fig. 7,

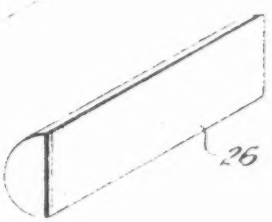

INVENTORS
William H. Davis & F. E. Joss
BY
Pennie, Davis, Marvin & Edmonds
ATTORNEYS

UNITED STATES PATENT OFFICE.

WILLIAM H. DAVIS, OF BRONXVILLE, AND FREDRICK E. JOSS, OF BROOKLYN, NEW YORK, ASSIGNORS TO LEKTOPHONE CORPORATION, A CORPORATION OF DELAWARE.

PHONOGRAPH TRANSMISSION.

1,312,935. Specification of Letters Patent. Patented Aug. 12, 1919.

Application filed May 9, 1918. Serial No. 233,466.

To all whom it may concern:

Be it known that we, WILLIAM H. DAVIS and FREDRICK E. JOSS, both citizens of the United States, residing at, respectively, Bronxville, county of Westchester, State of New York, and Brooklyn, county of Kings, city and State of New York, have invented certain new and useful Improvements in Phonograph Transmission; and we do hereby declare the following to be a full, clear, and exact description of the invention, such as will enable others skilled in the art to which it appertains to make and use the same.

This invention relates to transmission mechanism particularly applicable in connection with sound reproducing or regenerating machines of the type disclosed in U. S. Letters Patent to Marcus C. Hopkins, No. 1,271,527 of July 2, 1918.

An embodiment of the invention is illustrated in the accompanying drawings; but it is to be understood that no limitation to the precise structural details thereof is contemplated, since the invention is manifestly susceptible of modifications and changes within its legitimate scope, as subsequently claimed, and it is also to be understood that parts of the invention may be used independently of, and separate from, other parts, and in other and different combinations and environments.

In said drawings:

Figure 1 is a vertical sectional view, taken axially of one type of stylus holder, diaphragm and connected parts;

Fig. 2 is an enlarged detail view, in side elevation, of certain of the parts shown in Fig. 1;

Fig. 3 is an end elevation of Fig. 2;

Fig. 4 is an enlarged, horizontal section taken on the line 4—4 of Fig. 1;

Fig. 5 is a transverse sectional view taken on the line 5—5 of Fig. 4;

Fig. 6 is a perspective view of the stylus holder and the spring carried thereby; and

Fig. 7 is a detail view similar to Fig. 6, showing the adjusting and clamping block associated with said spring.

The invention is shown as applied to or associated with a Hopkins-type diaphragm 11 and with a transmission rod or interponent 12. The essential feature of this embodiment of the invention is the provision of a spring connection between the transmission member 12 and the stylus holder 21, to effect the resilient support of the latter above suggested. This spring connection will be fully described hereafter, both as to its construction and arrangement and as to its action.

The diaphragm 11, referred to as a Hopkins-type diaphragm, is a sound regenerator of the kind disclosed by Marcus C. Hopkins in his above mentioned U. S. Letters Patent No. 1,271,527, to which reference may be had for a complete description of the said diaphragm. For all present purposes it is sufficient to state that the diaphragm comprises a conical portion of light, vibratile material, which portion, when vibrated from or by a record or other sound-vibrated element, is thereby enabled to produce self-sustaining sound waves of the same intensity as the original sound waves, so that it takes the place, not only of the old sound-box, but also of the usual accompanying horn or like amplifier. The diaphragm is rigidly supported at its periphery between a pair of clamping rings 14 and 15, which are fastened together by screws, or in some other suitable manner, and are carried by a spider 16, the hub of the latter being mounted upon one end of a tubular supporting bar 17. This bar is formed with an eccentric bore 18, extending therethrough from end to end and providing a passage through which the vibration-transmission rod or interponent 12 is inserted. The opposite ends of the rod project beyond the bar 17, the rear end of said rod being equipped with a conical cap 19 which engages the apex of the conical portion of the diaphragm. The free or front end of the bar has fitted on it a cylindrical cap or sleeve 20, within which are accommodated the projecting front end of the transmission rod 12 and a portion of the stylus holder 21, the aforesaid end of the rod being here shown as connected to the stylus holder by means of a screw 22, which passes through a laterally-extending ear 23 on the holder and into the rod end. The end of the holder in which the stylus is actually received, projects outwardly through an aperture in the cap 20, as will be understood.

The spring 13, previously referred to, has the form of a strip or leaf, which, at its

forward end, is anchored in a vertical saw-cut provided in the elongated rear end or base 24 of the stylus holder, of which base the ear 23 is an integral part, the major portion of this spring being received, however, in a semi-cylindrical recess 25, formed in the forward end of the support and opening through the same. The spring fits against the flat wall of the recess and is retained in place by means of an adjustable clamping block 26 of semi-cylindrical shape, which is itself secured in position by screws 27, the arrangement of the said wall of the recess with respect to the supporting bar and the stylus holder being such that the plane of the spring normally coincides with, or passes through, the axis of the holder. The adjustment of the spring affords means for experimentally locating and establishing a particular and very precise resiliency in the exposed length of the spring which serves as a mounting for the stylus holder, and in this way enables the sensitiveness of the diaphragm to be controlled. It is merely necessary to loosen the hub of the spider 16, thereby freeing the diaphragm to move with the transmission rod, after which the spring is adjusted and the spider hub re-tightened.

It has been found by actual tests that a construction such as that just described permits the stylus holder to vibrate with marked freedom and yet in true response to the vibrations cut on the phonic lines of the record; that there is an entire absence of pivot-chatter, and of many other usually-present disturbing noises; and that said construction enables the stylus holder to transmit its vibrations through the interponent vibrator rod to the regenerating diaphragm in such a way that the latter functions with the maximum efficiency of which it is capable. It will be seen most clearly from Fig. 4 that the stylus holder 21, or said stylus holder in combination with the rod 12 if these two parts be very rigidly interconnected, may be considered a lever having a peculiar pivotal point. Just where this pivotal point is located, for any particular rocking movement of the lever during the time that the stylus is in motion, would be difficult to determine; but obviously such point is always somewhere in the exposed end of the leaf-spring 13 between the planes 13′ and 13″. In one sense, the pivot point is a variable one, and probably is constantly shifting, according as a vibration of one amplitude is succeeded by a vibration of a different amplitude.

Further description of the invention, its mode of operation, and its advantages is believed to be unnecessary in view of the foregoing, and is, accordingly, omitted. It may be stated, however, that the character of the recording of the sound-waves, i. e., whether hill-and-dale or lateral cutting is adopted, is immaterial, and to that extent the showing is to be considered as diagrammatic.

We claim:

1. In a phonograph transmission, the combination, with a supporting bar having a bore extending therethrough; of a diaphragm carried by said bar at its rear end; a stylus holder at the front end of the bar; a vibration transmission element extending through said bore and connected at opposite ends with said diaphragm and said holder; and a resilient member connecting said holder and the adjacent end of said bar to vibratably support the former.

2. In a phonograph transmission, the combination, with a supporting bar having an eccentric bore extending therethrough; of a diaphragm carried by said bar at its rear end; a stylus holder at the front end of the bar; a vibration transmission element extending through said bore and connected at opposite ends with said diaphragm and said holder; and a resilient member connecting said holder and the adjacent end of said bar to vibratably support the former, said member normally occupying a plane which passes through the axis of the holder.

3. In a phonograph transmission, the combination, with a supporting bar; of a diaphragm carried by said bar at its rear end; a stylus holder at the front end of the bar; a vibration transmission element disposed longitudinally of the bar and connected at opposite ends with said diaphragm and said holder; and a resilient member connecting said holder and the adjacent end of said bar to vibratably mount the former.

4. In a phonograph transmission, the combination, with a supporting bar; of a diaphragm frame adjustable along said bar at one end; a diaphragm mounted in said frame for adjustment therewith; a stylus holder at the other end of the bar; a vibration transmission element disposed longitudinally of the bar and connected at opposite ends with said diaphragm and said holder; and a resilient member connecting said holder and the adjacent end of said bar to vibratably mount the former; said member having an adjustable engagement with said bar to regulate the vibratory movement of the holder.

5. In a phonograph transmission, the combination, with a supporting bar having a bore extending therethrough; of a diaphragm frame adjustable along said bar at its rear end; a diaphragm mounted in said frame for adjustment therewith; a stylus holder at the front end of the bar; a vibration transmission element extending through said bore and connected at opposite ends with said diaphragm and said holder; and a resilient member connecting said holder and

the adjacent end of said bar to vibratably support the former; said member having an adjustable engagement with said bar to regulate the vibratory movement of the holder.

6. In a phonograph transmission, the combination, with a supporting bar having a recess in its front end; of a diaphragm frame adjustable along said bar at its rear end; a diaphragm mounted in said frame for adjustment therewith; a stylus holder at the front end of the bar; a vibration transmission element disposed longitudinally of the bar and connected at opposite ends with said diaphragm and said holder; and a resilient member having its body inserted in said recess and its outer end projecting beyond the bar end and anchored to the holder to vibratably support the same, said member being adjustably engaged in said recess to vary the effective length and consequent resiliency of its said outer end.

7. In a phonograph transmission, the combination, with a supporting bar having a bore extending therethrough and a recess in its front end; of a diaphragm frame adjustable along said bar at its rear end; a diaphragm mounted in said frame for adjustment therewith; a stylus holder at the front end of the bar; a vibration transmission holder extending through said bore and connected at opposite ends with said diaphragm and said holder; and a resilient member having its body inserted in said recess and its outer end projecting beyond the bar end and anchored to the holder to vibratably support the same, said member being adjustably engaged in said recess to vary the effective length and consequent resiliency of its said outer end.

8. The combination of a supporting bar; a vibration transmission element disposed longitudinally thereof; a stylus holder at the front end of the bar having a base provided with a laterally-projecting ear to which the front end of the transmission element is connected; and a resilient member connecting said base and the front end of said bar to vibratably mount the stylus holder.

9. The combination of a supporting bar; a vibration transmission element disposed longitudinally thereof; a stylus holder at the front end of the bar having a base provided with a lateral projection to which the front end of the transmission element is connected, the rear face of the base being formed with a slot; and a leaf spring anchored at one end on said bar and at the other end in said slot to vibratably mount the stylus holder.

WILLIAM H. DAVIS.
FREDRICK E. JOSS.

DEFENDANT'S EXHIBIT NO. 41.

PHOTOGRAPHS OF SAND PATTERNS
ON
IN[illegible] DIA[illegible]

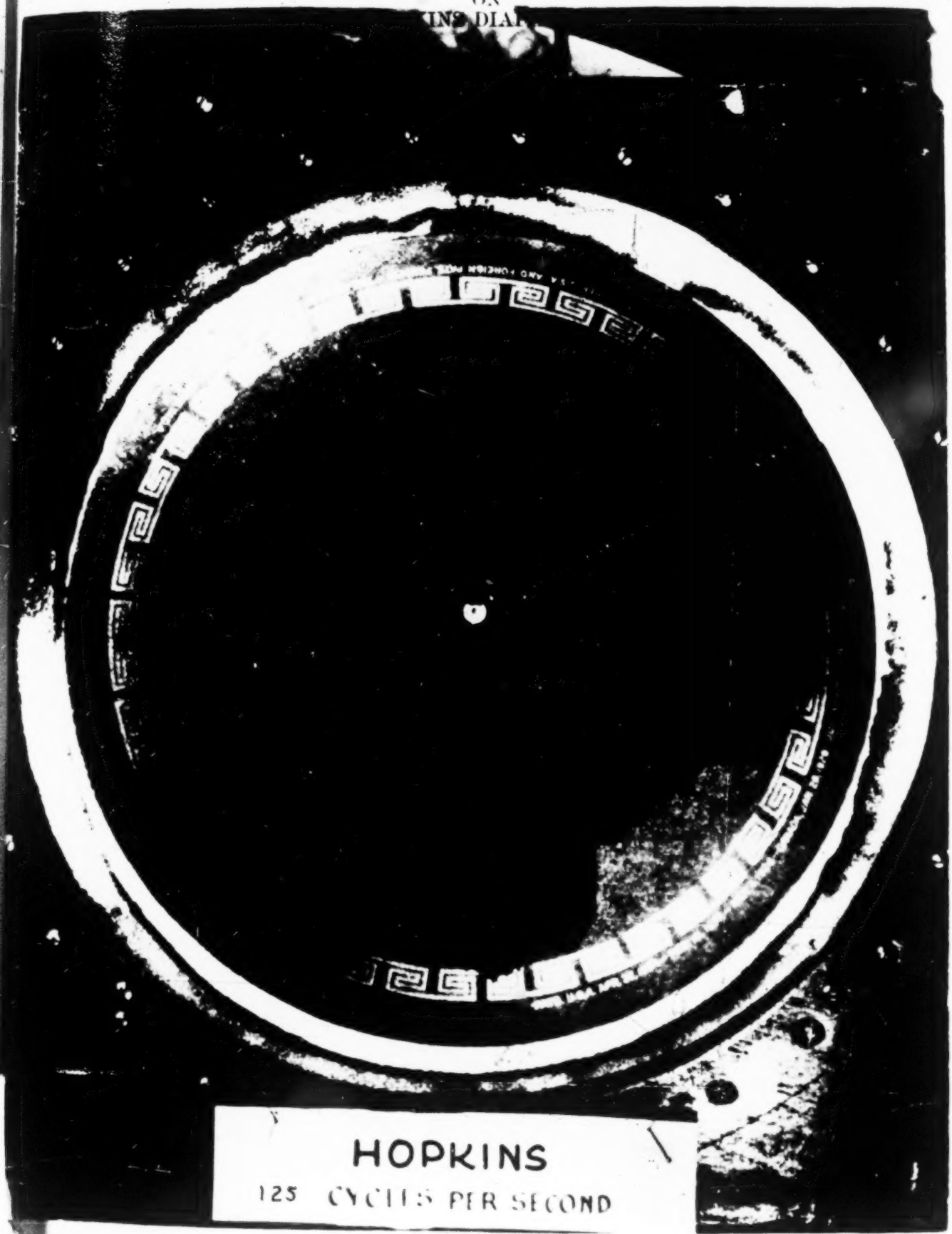

HOPKINS
3200 CYCLES

Dominion of Canada.

PATENT OFFICE.

Certified to be true and correct copies of the original specification and drawings remaining on record in this office, duplicate copies of which were attached to Patent No. 266,986 bearing date the 21st. day of December, 1926, and granted to Hopkins Corporation, assignee of Marcus C. Hopkins,

for "Loud Speaker",

(Application for which was filed March 9, 1926.)

The full fee for a term of eighteen years has been paid on said Patent

As Witness the seal of the Patent Office hereto affixed at the City of Ottawa, in the Dominion of Canada, this 20th day of 1928 in the year of our Lord one thousand nine hundred and twenty-eight.

Commissioner of Patents

Patent No. 256936
Dated Dec. 21, 1926
Filed Mar. 9, 1926

2½----------2
20-4-28
M.E.G.-------- M.S.

S P E C I F I C A T I O N

M.S.
M.E.G.

TO ALL WHOM IT MAY CONCERN:

Be it known that I, MARCUS C. HOPKINS, a citizen of the United States, residing in Washington, District of Columbia, whose post office address is care of D. Ballauf, Inc., 621 H. Street, N.W., Washington, District of Columbia, U.S.A., an Engineer, have invented certain new and useful improvements in

"LOUD SPEAKER"

and I do hereby declare the following is a full, clear and exact description of the same.

The present invention relates to loud speakers suitable for use with radio receiving sets, or as announcers for telephones and like wired circuits. It is an object of the present invention to improve the operation and appearance of loud speakers of the cone type by reinforcing or covering portions of the structure with paper, or other fibrous material, as hereinafter explained in detail. Other objects and advantages will become clear from the following detailed description taken in conjunction with the accompanying drawings, wherein

Figure 1 is a front elevation of a loud speaker of the cone type;

Figure 2 is a rear elevation of the same;

Figure 3 is a side elevation;

Figure 4 is an enlarged section on the line 4-4 of Figure 1;

Figure 5 is a front elevation of a modified form of speaker, and

Figure 6 is a section on the line 6-6 of Figure 5.

In the embodiment illustrated in Figures 1 and 4, inclusive, the loud speaker embraces a fibrous vibratory cone 1 which may be made from a flat sheet of cover paper cut and folded to shape and glued along a radial seam. Vibratory energy is delivered to the apex of this cone through a vibratory metal rod 2 clamped to the apex of the cone at 3 and vibrated by an electrical movement 4 secured to a wood cross arm or spider 5. At the base of the cone the paper is bent to form an outwardly flaring frusto conical brim 6. The base of the cone may be circular in outline, or it may be oval, as shown in Figure 1. Surrounding the

cone is an annular resonator 7, preferably made of wood, and having its inner beveled edge 8 glued or otherwise suitably secured to the outwardly flaring brim 6 of the cone. It is desirable that the brim shall overlap the wood edge far enough to give flexibility to the paper structure, ... in other words, to form a sort of hinge at the base of the cone for reasons explained at some length in my Canadian Patent No. 169,043, dated April 25, 1916 and my United States Patent No. 1,271,529, dated July 2, 1918.

The wood resonator can conveniently be made of three ply veneer with the grain of the inner ply running transverse to the grain of the two outer plies. Fir and spruce may be used for this purpose with satisfaction. Flued or otherwise suitably secured to the front face of the resonator 7 is a hollow anaglyph 9 shaped to give ornamentation, as indicated by Figure 1. Such an anaglyph can be made from long fibred paper stock by molding under pressure while damp. Such paper pulp anaglyphs are obtainable in the open market and are very light in weight, tough in texture, and with a surface dense enough to admit of artistic decoration. A thickness of 1/16th of an inch is suitable, but variations from that thickness may be made without radically changing the sound producing qualities of the loud speaker.

The structure above described may be mounted between wood pedestals 10 and 11, and a connecting cross bar 12.

The structure above described may be made in various sizes, but the one from which Figures 1 to 4 was made has a resonator approximately 24 1/2" high and 20 1/2" broad, and 3/8" thick.

When speech current is delivered from a radio receiving set, or from a telephone circuit, to electrical

movement 4, the variations of the speech current cause corresponding vibrations in the transmission rod 2, with the result that vibratory energy is delivered to the apex 3 of cone 1. The vibratory energy is then transmitted outward along the paper cone toward the wood resonator. Tones of high pitch travel along the paper for but a short distance before they are damped off by the air and become audible. Vibrations of middle pitch travel further along the cone but ultimately reach an area or annular zone at which they too are damped off by the air and become audible. Vibrations of the lower frequencies travel to the base of the cone and then through the paper hinge to the wood resonator and out toward or even to the edge of that resonator, and somewhere along that route, except for the lowest tones, will find a zone or annular area at which they too will be damped out by the surrounding air and will be dissipated as audible energy or sound.

The annular wood rim is not resonant in the sense that a tuning fork, or metal bell, or organ pipe, is resonant, for it has no capacity for prolonging the delivery of vibratory energy after the impelling force ceases. The wood rim, is, however, resonant in the sense that it acts as a sounding board for effectively delivering to the surrounding air the vibratory energy necessary to produce audible sound, and particularly, low tones. Phonetically it is dead beat.

The distribution throughout the structure of the vibratory energy delivered by rod 2 to the apex 3 of the paper cone depends on various factors, such as the weight, the stiffness, and the elasticity of the cone and of its

wood sounding board and the relation of these factors to the weight and elasticity of the surrounding air. That is to say, the radial distance through which vibratory energy of a given pitch will travel along the paper path and the paper and wood path depends on various factors, some of which are controllable. For all frequencies within the audible range there is a responsive annular band or area on the cone or its resonator. These responsive bands or areas overlap somewhat and the exact breadth and location of each band can be altered by changing the thickness of the paper cone, the slope of the cone, the magnitude of the vibratory movement imparted thereto by rod 2, etc. The responsive band for any frequency can be located by known laboratory methods.

I have discovered that with a structure constructed as above described, the face of the wood resonator may be covered with a hollow paper anaglyph without destroying the utility of the device as a loud speaker and even with an improvement in its tone characteristics through redistribution of the annular bands or areas which are responsive to the audible tones most desired from a loud speaker of this kind. It might be assumed that the application of a hollow paper anaglyph to the front face of the wood sound board would muffle or suppress the lower tones, but from experimental trial I have determined that there is not that disadvantage, and that whatever redistribution of sounding areas may have occurred in no way impairs the effectiveness of the device.

A hollow paper anaglyph glued in place as shown in Figs. 1 and 4 gives to the structure a highly ornamental effect. The anaglyph may be painted, or otherwise decorated,

of may be bronzed or gilded.

In the embodiment illustrated in Figures 5 and 6, a paper cone 13 actuated by an electrical movement 14 through a vibratory rod 15 attached to the cone apex 16 has a forwardly bent brim 17 glued for a part of its width to the inner beveled edge of the wood resonator or sound board 18.

With a cone made of cover paper and having a diameter of 17" at the base, the resonator 18 may properly have a diameter of four feet. When made of three ply spruce or fir the results are satisfactory. I find that there is advantage in stiffening the edge of such a resonator as by nailing thereto a relatively broad reinforcing wood rim 19. Claims on this rim when used independently of the other features herein disclosed are presented in a companion application. The rim 19 seems to have the effect of assisting in the translation into audible sound of vibrations of very low pitch which have traveled radially from the apex of the cone to the periphery of the annular resonator 18. A second rim 20 of wood may be secured within rim 19 and may be given an ornamental finish by a molding 21. There is advantage in having rim 20 and molding 21 hollowed out as shown in the drawing, though just why this is I am not at the moment prepared to state unless it be the lightening in weight thereby obtained. A wood beading 22 glued or tacked to the front of the resonator improves its appearance. Such a beading can also be used to regulate distribution of the responsive bands or areas, and can be shifted in position until by experimental trial the desired result is produced.

In this embodiment two hollow paper anaglyphs 23 and 24 are used in a concentric grouping as shown in Figure 5. Omitting one or the other will change somewhat the distribution of the sounding bands or areas, and the use of

supplement anaglyphs of larger diameter will likewise influence distribution of the sounding areas. However, with a 4 foot resonator of three ply fir 3/8" thick and a central opening 17" in diameter and fitted with a cone of cover paper as above described, the number, size and distribution of anaglyphs, the beading 22, and the rims 19 and 20 may be advantageously as shown in Figures 5 and 6. Such a structure finished throughout in imitation of antique bronze presents a pleasing dignified appearance when supported vertically, or when suspended in horizontal position below the ceiling of an auditorium. It is intended for use in rooms of relatively large capacity, such as theatres, restaurants, dance halls, and the like.

I CLAIM:-

1. In a loud speaker having a resonator, and an anaglyph secured to and covering a part at least of said resonator.

2. In a loud speaker having a resonator, an attached hollow paper covering for a part at least of said resonator.

3. In a loud speaker having a wood resonator, a hollow paper covering secured to and covering a part at least of said resonator.

4. In a loud speaker, the combination of a paper cone, a sounding board therefor, a yielding connection between said cone and said sounding board, and a paper anaglyph secured to the front face of said sounding board.

5. In a loud speaker, the combination of a fibrous vibratory cone, a wood sounding board operatively connected to the periphery of said cone, and a hollow paper anaglyph secured to the front face of said resonator.

6. In a loud speaker, the combination of a fibrous vibratory cone, a wood resonator operatively connected to the periphery of said cone, and a hollow paper anaglyph secured to the front face of said resonator.

7. In a loud speaker, the combination of a paper cone having a forwardly bent brim, a resonator to the beveled inner edge of which said brim is secured, and a hollow paper anaglyph glued to the front face of said resonator.

8. In a loud speaker the combination of a fibrous vibratory cone having a forwardly bent brim, a wood resonator operatively attached to said brim, a wood rim secured to and stiffening the edge of said resonator, and a hollow paper anaglyph secured to the front face of said resonator.

9. In a loud speaker the combination of a paper cone having a forwardly bent brim, a resonator to the beveled inner edge of which said brim is secured, a rim secured to and stiffening the edge of said resonator, and a hollow paper anaglyph secured to the front face of said resonator.

10. In a loud speaker the combination of a fibrous vibratory cone having a forwardly bent brim, an annular resonator to the beveled inner edge of which said brim is glued, a wood rim secured to and stiffening the edge of said resonator, and a hollow paper anaglyph glued to the front face of said resonator.

IN TESTIMONY WHEREOF I affix my signature, in the presence of two witnesses at Washington, D. C., this 20th day of February, 1926.

(Sgd). MARCUS C. HOPKINS

RICHARD K. STEVENS

GORDON C. MACK

Loud Speaker. 2666936

1 (2)

Fig. 1,

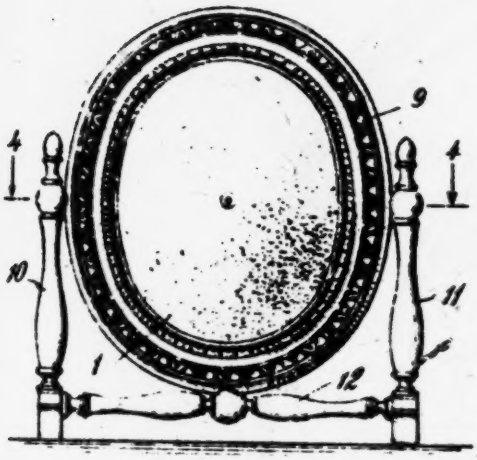

Fig. 2,

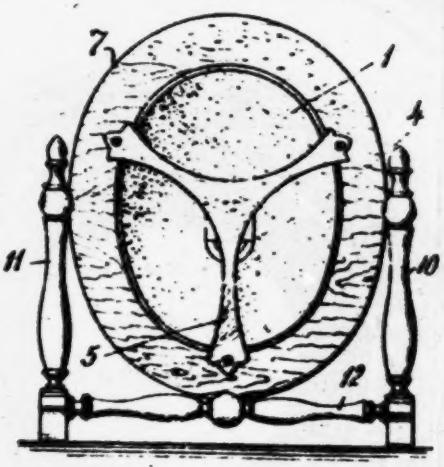

Fig. 3,

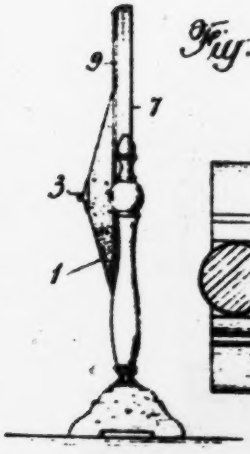

Fig. 4,

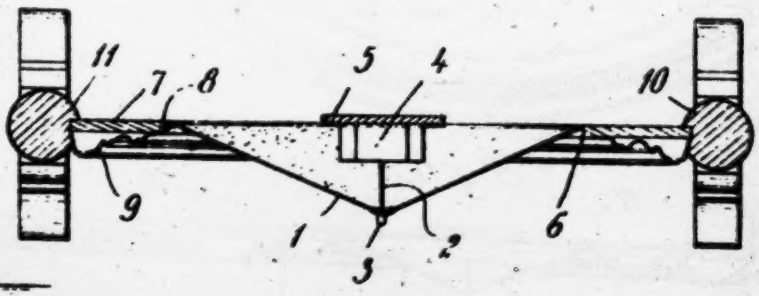

Certified to be the drawing referred to in the specification hereunto annexed.

New York, N.Y. Feb'd. March 8 1926

APPLICANT

Marcus C. Hopkins

By Pennie, Davis, Marvin & Edmonds

ATTORNEY

570

266936
2(2)

Fig. 5.

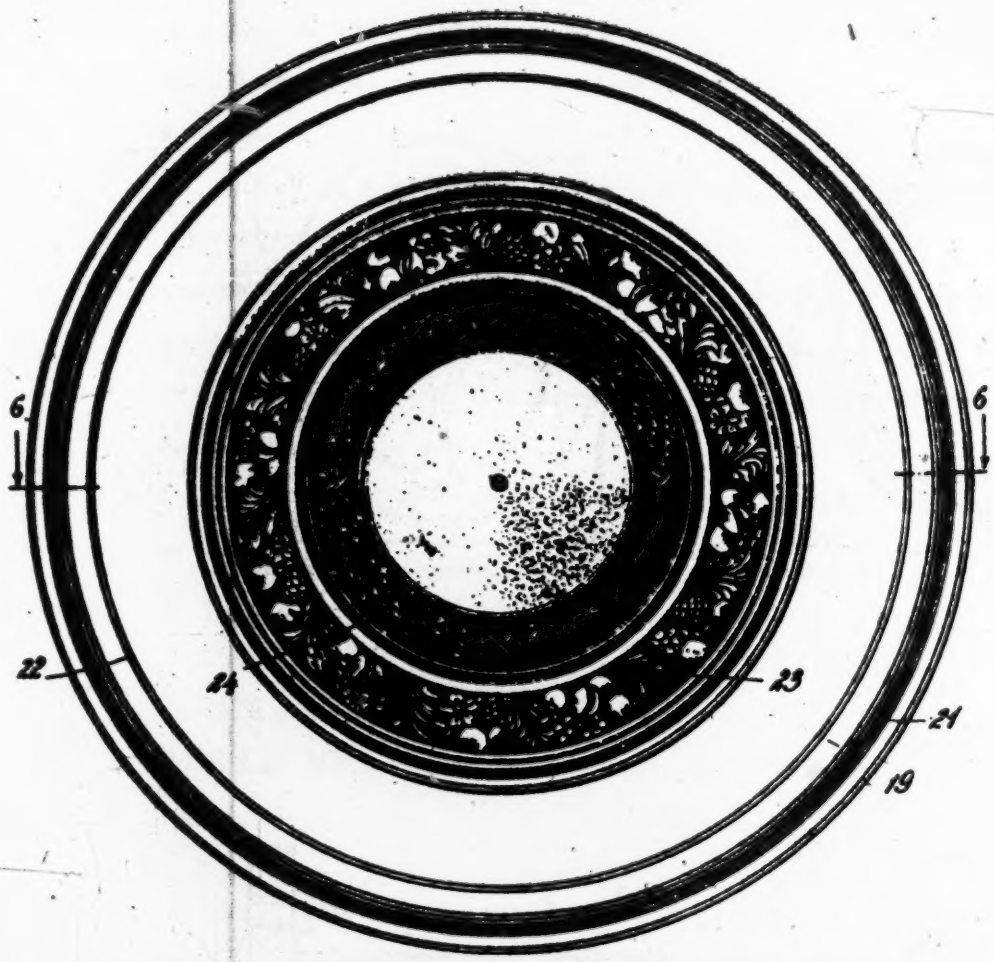

Fig. 6.

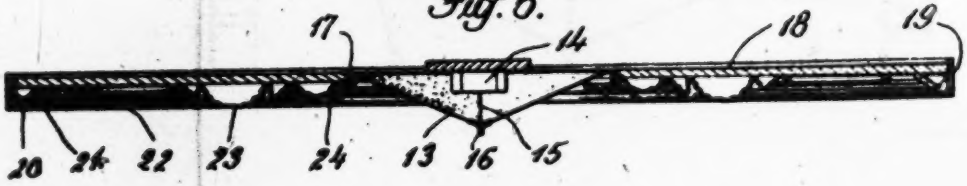

Certified to be the drawings referred to in the specification hereunto annexed.

APPLICANT

Marcus C. Stipkins

New York, N.Y., U.S.A. March 8, 1926

By Penne, Davis, Marvin & Edmonds

ATTORNEY

Dominion of Canada

PATENT OFFICE.

Certified to be true and correct copies of the original specification and drawings remaining on record in this office, duplicate copies of which were attached to Patent No. 266,934 bearing date the 21st day of December, 1926, and granted to Hopkins Corporation, assignee of Marcus C. Hopkins,

for "Loud Speaker",

(Application for which was filed March 9, 1926.)

The full fee for a term of eighteen years has been paid on said Patent.

As Witness the seal of the Patent Office hereto affixed at the City of Ottawa in the Dominion of Canada this 20th day of April, in the year of our Lord one thousand nine hundred and twenty-eight.

[signature]

Patent No. 266934
Dated Dec. 21, 1926
Filed Mar. 9, 1926

3----------4

19-4-28

M.R.....A.M.

S P E C I F I C A T I O N.

TO ALL WHOM IT MAY CONCERN:

BE IT KNOWN that I, MARCUS C. HOPKINS, a citizen of the United States, residing in Washington, District of Columbia, whose post office address is care of D. Ballauf, Inc., 621 H. Street, N.W., Washington, District of Columbia, U.S.A., an Engineer, have invented certain new and useful improvements in

"LOUD SPEAKER"

a.m.
m.k.

and I do hereby declare the following is a full, clear and exact description of the same.

The present invention embraces a loud speaker suitable for use on a radio receiving set, and also suitable for use as an annunicator on wired radio systems, and in general, wherever speech current is to be translated into audible sound.

It is an object of the present invention to provide a loud speaker of the cone type wherein the cone, which may be made of paper or like material, has its outer edge bent forward to form a brim or rim by which the cone is yieldingly attached to a wood frame capable of acting as a resonator to supplement the sound-producing action of the cone.

In the preferred form of the device the wood frame is of circular outline and has cut in one of its faces an annular groove bordered by beveled edge to which the brim of the cone can be glued or otherwise secured. That portion of the disc outside of the cone acts as a sound producer or resonator, and that part of the disc within the periphery of the cone acts as a mechanical support for the electrical movement whereby the device is actuated.

Other objects and advantages will become clear from the following detailed description taken conjunction with the accompanying drawings wherein

Figure 1 is a front elevation of the loud speaker;

Figure 2 is a side elevation of the same;

Figure 3 is a sectional elevation on the line 3-3 of Figure 4;

Figure 4 is a front elevation with the paper cone removed to disclose the electrical movement;

Figure 5 shows the electrical movement in front elevation with certain parts in section;

Figure 6 shows said element in side elevation;

Figure 7 is a transverse section on the line 7-7 of Figure 5;

Figure 8 is a plan view of the electrical movement;

Figure 9 is a sectional detail of the laminated armature thereof,

Figure 10 shows the slots in the adjustable pole shoe of the unit, and Figure 11 is a detail of one of the pole pieces.

The preferred embodiments disclosed in the drawings comprise a wood base 1 having a slot in which is glued the lower edge of a circular resonator 2. This resonator is preferably made of three ply wood. Three ply fir three eighths of an inch thick is suitable, and there is advantage in having the grain of the inner ply 3 disposed at right angles to the grain of the two adjacent outer plies. An annular groove 4 is turned in this resonator, and at the outer edge of this groove the wood is beveled at 5 to form a seat to which may be glued the outwardly bent brim 6 of the sound producing cone 7. This cone may be made of paper. Paper of the quality known as cover paper is suitable. The cone can be cut from a flat sheet and then bent into shape and glued along a radial seam. The outer edge of the conical structure so formed is then bent at 8 to form an outwardly flaring brim. The brim will naturally take on a fruste conical form making an angle to the vertical plane substantially equal to the angle at which radial elements of the cone intersect the vertical plane. It is important that the outer part only of this brim 6 be fastened to the wood resonator at the beveled surface 5 for the inner portion of the brim is relied on to form a resilient support or hinge whereby the cone 7 may move

bodily without substantial distortion. For a paper cone 12" in outside diameter the brim may be 3/8 of an inch wide and the glued portion may have a width of 1/4" or thereabout.

The cone plays, not only on its front surface, but also on its back surface, and to prevent muffling of its vibrations, there is advantage in cutting away a part of the wood disc 2 as by cutting three circular openings therein a, b and c as shown in Figure 4. This leaves a spider of wood strong enough to support the electrical actuating movement, but not obstructing the rearwardly projected sound waves to such an extent as would cause troublesome muffling. That part of the disc which lies outside of the cone is the part mainly relied on to supplement the primary vibrations of the cone, and to act as a sounding board, particularly for tones in the lower range, though some of that part of the board within the periphery also acts to transmit vibrations to the air.

The electrical movement for actuating the cone comprises a permanent magnet 9 suitably clamped to the wooden disc 2 as by a cross bar 10 and machine screw 11. Secured to pole 12 of the magnet by a screw 13 (Fig.5) is a pole piece 14 of irregular shape. This pole piece 14 is provided with an extension 15 which projects beyond the end of pole 12 and carries a pair of lugs 16 pressed out from the stock of the extension by a punching operation and serving to center the pole piece on the end of the pole when bolt 13 is tightened. The other magnet pole 17 is similarly provided with a pole piece 18 held in place by a screw 19 and carrying a transverse bolt 20 whereby the vibratory armature is supported.

The vibratory armature consists of a plurality of

blued steel laminations 21, say four in number, spaced apart on bolt 20 by iron washers 22, with which the laminations make close magnetic contact. At their other ends the laminations are spaced apart by soft iron washers 23, and are held in close contact therewith by a soft iron element 24, one end of which is riveted over to form an annular flange 25 tightly holding the laminations and washers together. This element 24 is in part hollow to receive a transmission rod 26, preferably made of phosphor bronze and secured to element 24 by solder 27. The forward end of the transmission rod 26 passes through a hollow rivet 28 at the apex of the cone, and may there be rigidly attached by a soldered connection 29 (Fig.5). Or, if desired, as shown in Figure 6, a set screw 30 may be used in place of or as supplemental to a soldered connection 31. Conical brass plates 32 and 33 serve to strengthen the apex of the cone and are held in tight engagement with the paper at the apex of the cone by the hollow rivet 28.

The electro magnet to which speech current is delivered for actuating the armature comprises a simple solenoid 34. About 6000 turns of No. 40 enameled wire mounted on a bakelite or composition spool 35 is suitable for this purpose. An insulating face plate 36 may be used as a guide and anchor for the leading in wires 37 and 38. Mounted to move within this coil is a soft iron pole shoe 39, a portion of which is threaded at 40 for engagement with threads cut in the pole piece 14. There is also provided a knob 41 positioned at the back of the wood resonator and by which pole shoe 39 may be advanced or retracted to increase or decrease the air gap between it and the opposing element 24. The pole shoe is

preferably provided with intersecting slots 42 and 43 (Fig. 10) to reduce eddy currents.

Figure 11 shows pole piece 14 in rear elevation. I find that it is advantageous to first drill this pole piece to receive the threaded pole shoe 39 and then to slot it at 44 through the tapped hole. The two fingers thus produced are then squeezed inward toward one another by such an extent as may be needed to give a frictional grip on the threaded portion 40 of the pole shoe 39. This prevents that pole shoe from working loose during shipment and also holds the pole shoe in rigid position irrespective of the vibration to which the pole shoe is subjected when in actual use. This slot 44 has the further function of reducing eddy current losses in that part of the pole piece lying nearest to coil 34. This one expedient increases the effectiveness of the device to a very noticeable extent.

With the elements constructed and arranged as above described a speech current passed through winding 34, as from a radio receiving set or a wire annunciator system or circuit, will produce a corresponding vibration of the laminated armature and such movement of the transmission rod 26 as to translate the electrical impulses into audible sound thereby in effect reproducing the speech or other signal represented by the speech current.

The conical diaphragm 7 can move bodily because of its yielding or hinged connection with the wood resonator, and I have found is capable of transmitting its vibrations through the hinge to the wood. This is particularly true with respect to tones low in the musical scale. The wood takes up the vibrations and together with the cone transmits the

vibrations to the surrounding air with results that are highly satisfactory. The pole shoe can be advanced or retracted through coil 34 by suitably manipulating the knob 41, and in this manner the width of the air gap can be coordinated to the strength of the signals being received. Any expansion or contraction of the diaphragm due to atmospheric conditions is not of serious consequence because the free end of the armature can move with the cone and readjustment of the air gap to compensate for such changes requires nothing more than manipulation of knob 41.

The loud speaker or annunciator above described may be made in various sizes, and is compact, rugged, and inexpensive to build. When built into a radio receiving set or cabinet, or when used as an accessory in other articles of merchandise, such as reading lamps, the base 1 may be omitted.

Various changes in details of parts, and in their grouping may be made without departing from the spirit of the invention as defined by the appended claims.

In my copending application, Serial No.311,594 filed March 9, 1926 claims are presented on the broad expedient of shaping the paper cone with a bent brim and attaching this brim to a beveled seat on the resonator. Also in my copending application Serial No. 311,591 filed March 9, 1926 claims are presented on the electrical movement described above.

I CLAIM:

1. In a cone type loud speaker, the combination of a flat sounding board, and a cone flexibly connected thereto, said sounding board extending across the base of the cone.

2. In a cone type loud speaker, the combination of a sounding board of circular outline and a cone flexibly connected thereto, said sounding board extending beyond the periphery of the cone and having portions extending across the base of the cone.

3. In a cone type loud speaker, the combination of a flat sounding board of wood having holes therethrough near the center of the board, and a vibratory cone mounted on said sounding board outside of said holes.

4. In a cone type loud speaker, the combination of a flat sounding board having an annular groove and a vibratory cone mounted on the front face of said board with its edge in said groove.

5. In a cone type loud speaker, the combination of a wood sounding board having an annular groove, and a vibratory cone having its periphery positioned in said groove.

6. In a cone type speaker, the combination of a flat sounding beard having an annular groove with a beveled edge, and a vibratory cone having a forwardly bent brim glued to the beveled edge of said groove.

7. In a cone type speaker, the combination of a wood sounding board having an annular groove, and a vibratory cone flexibly secured to the front face of said board with its periphery positioned in said groove.

8. In a cone type loud speaker, a sounding board having openings therethrough to form a spider, a cone secured to the face of said board outside of said spider, and an actuating movement housed within said cone and supported by said sounding board near the center of said spider.

9. In a cone type loud speaker, the combination of a sounding board having an annular groove with a beveled edge, a vibratory cone flexibly secured to said beveled edge, and an actuating movement supported by said sounding board and operatively connected with the apex of said cone.

10. In a cone type loud speaker, a sounding board cut away near its center to form a spider, a paper cone of less diameter than said sounding board and having a forwardly bent brim secured to said sounding board outside of said spider, and an actuating movement supported by said spider and operatively connected to vibrate said cone.

11. In a cone type loud speaker, the combination of a wood back, an actuating movement carried thereby, and a cone supported at the front of said wood back and operatively connected to said movement.

12. In a cone type loud speaker, the combination of a plane wood back, a cone of lesser periphery yieldingly engaging the front face therof, and an actuating movement connected with said cone and housed between said cone and said back, said back being cut away in part to facilitate the propagation of sound from the rear of said cone.

13. In a cone type loud speaker, the combination of a wood base, a vertical wood back carried thereby and

having holes therethrough for the transmission of sound, an actuating movement supported on the front face of said back near its center, and a vibratory cone of lesser diameter than said back and covering the holes therein, and also covering said actuating movement, the apex of said cone being operatively connected with said actuating movement.

14. In a cone type loud speaker, the combination of a vertical wood back having sound transmitting openings therethrough, said back having an annular groove in the front face thereof outside of said openings, and a vibratory cone mounted for free bodily movement and having its periphery in said groove.

15. In a cone type loud speaker, the combination of a wood back having openings therethrough, an annular groove in the front face of said back outside of said openings, and actuating movement mounted on the front face of said board near its center, and a vibratory cone housing said movement and having its edge yieldingly connected with said wood back at said groove.

16. In a cone type loud speaker, the combination of a wood back having an annular groove in the front face thereof, a vibratory cone having its edge in said groove, and a yielding element between said edge and the wood of said groove.

17. In a cone type loud speaker, the combination of a wood back with sound transmitting openings therethrough an actuating movement supported on the front face of said wood back near its center, a paper cone of less diameter than said wood back and housing said actuating movement, and a yielding element between the edge of said cone and said back adapted to give physical support to the cone while

permitting bodily movement thereof when actuated on by said movement.

18. In a cone type loud speaker, the combination of a flat wood back, an actuating movement carried thereby, a cone supported at the front of said wood back with its concave side toward said back, said back extending beyond the periphery of the cone and having portions extending across the base of the cone.

19. In a cone type loud speaker the combination of a plane back of wood veneer, a cone of lesser periphery with its edge spaced from said back by an annular yielding element and an actuating movement operatively connected between said cone and housed between said cone and said back, said back being cut away in part within the periphery of the cone.

20. In a cone type loud speaker, the combination of a wooden sounding board, a conical diaphragm mounted thereon and actuating means connected to the diaphragm, at least a portion of the sounding board extending across the base of the cone.

IN TESTIMONY WHEREOF, I affix my signature, in the presence of two witnesses at Washington, D.C., this 20th day of February, 1926.

(Sgd.) MARCUS C. HOPKINS.

RICHARD K. STEVENS.

GORDON C. MACK.

Loud Speaker 266934
1(4)

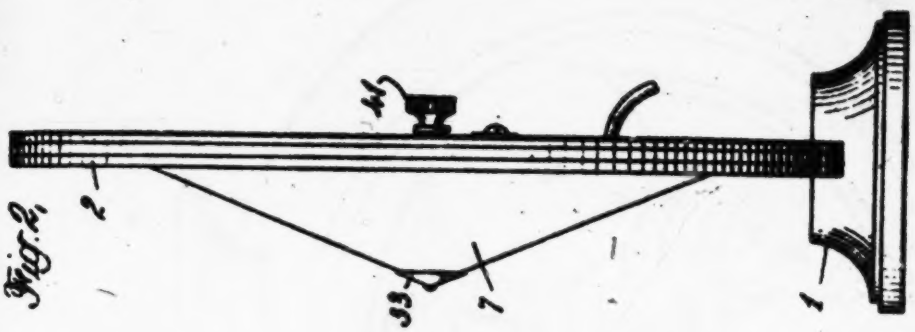

Fig. 2.

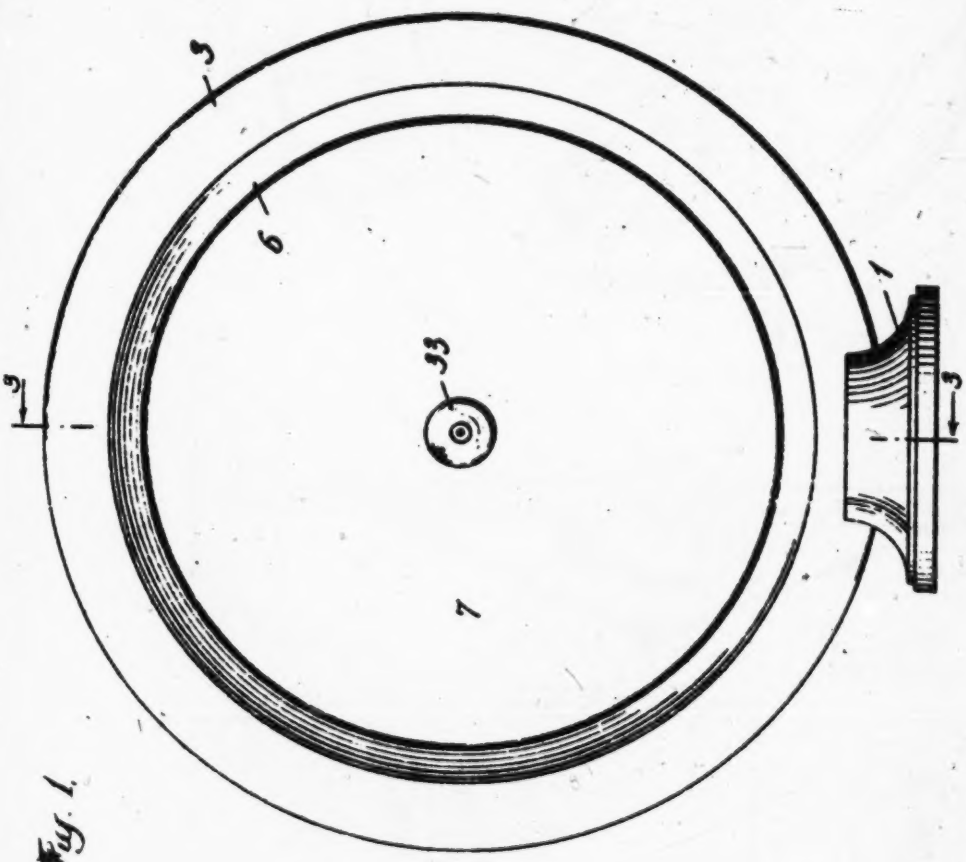

Fig. 1.

Certified to be the drawings referred to in the specification hereunto annexed.

APPLICANT

Marcus C. Hobbins

New York, N.Y. U.S.A. March 8, 1926

By Sinnie Davis, Marvin & Edmonds

ATTORNEY

266934
2(4)

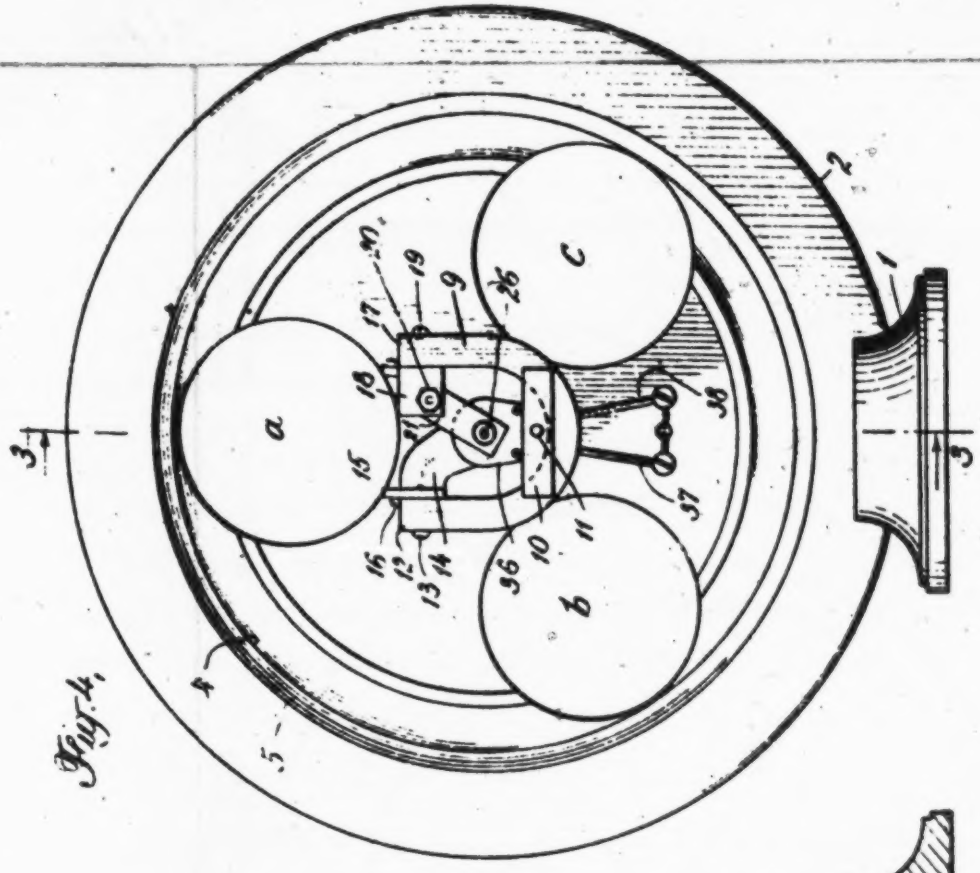

Fig. 4.

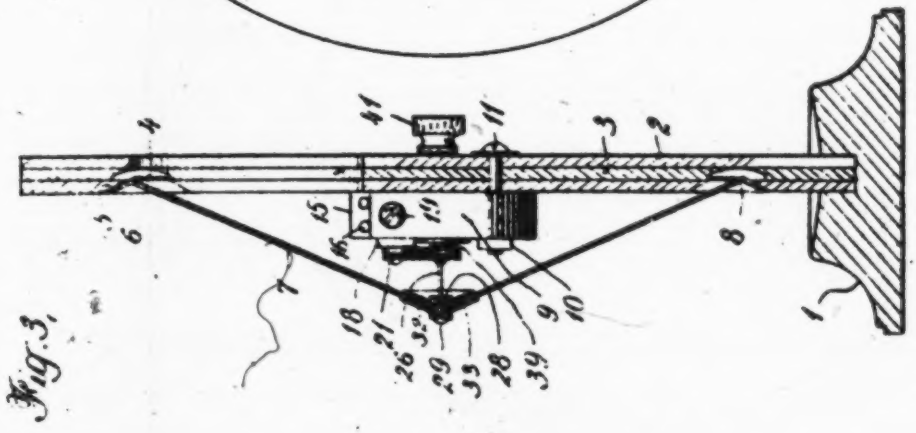

Fig. 3.

Certified to be the drawings referred to in the specification hereunto annexed.

New York, N.Y. U.S.A. March 8, 1926

APPLICANT

Marcus C. Hopkins

By Pennie, Davis, Marvin & Edmonds

ATTORNEY

266934
3(4)

Fig. 5,

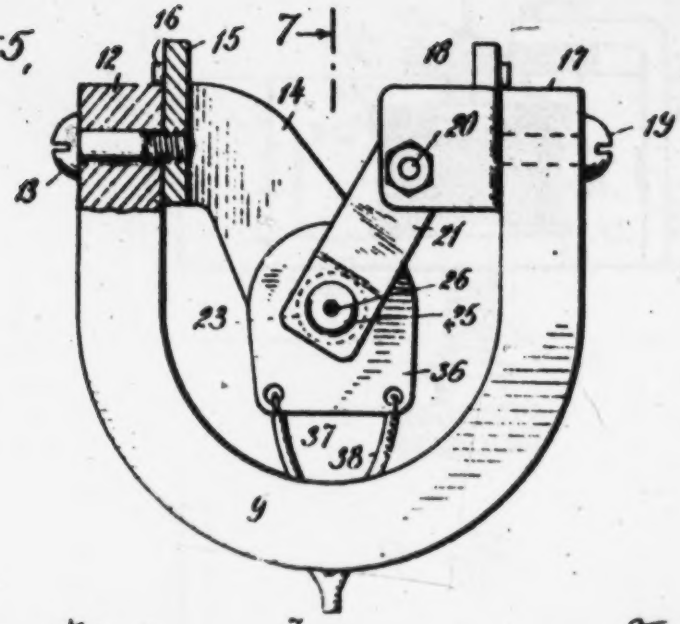

Fig. 6,

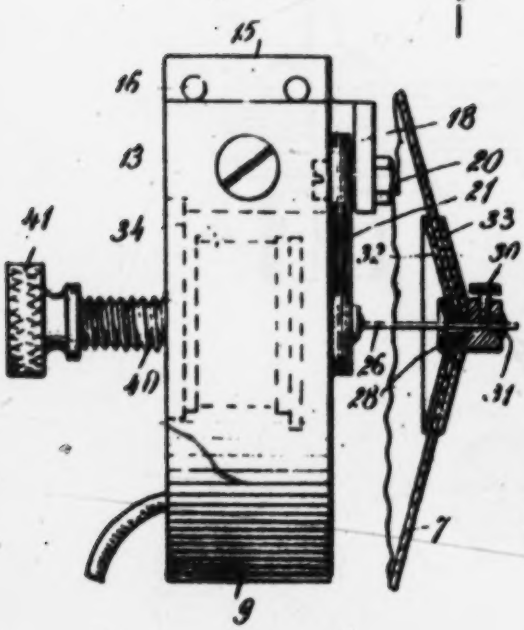

Fig. 7.

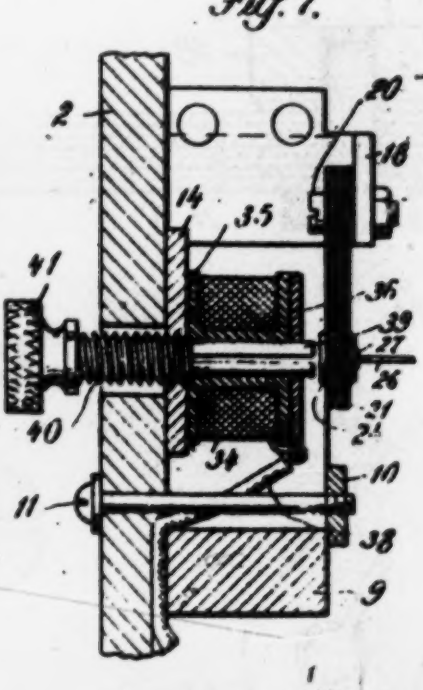

Certified to be the drawing referred to in the specification hereunto annexed.

New York, N.Y., U.S.A., March 8, 1926.

APPLICANT

Marcus P. Hopkins

By Connie, Davis, Mann & Edmonds

ATTORNEY

266934
4(4)

Fig. 8

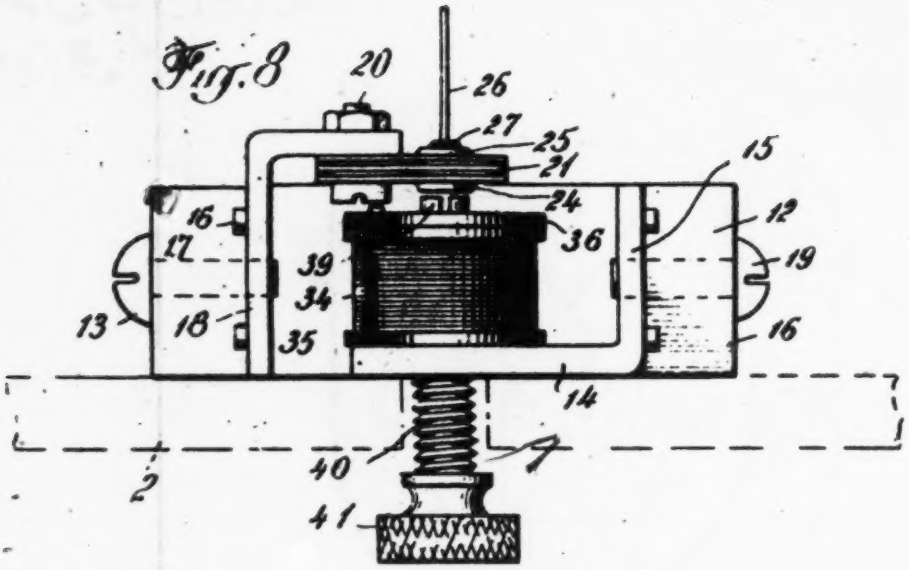

Fig. 9

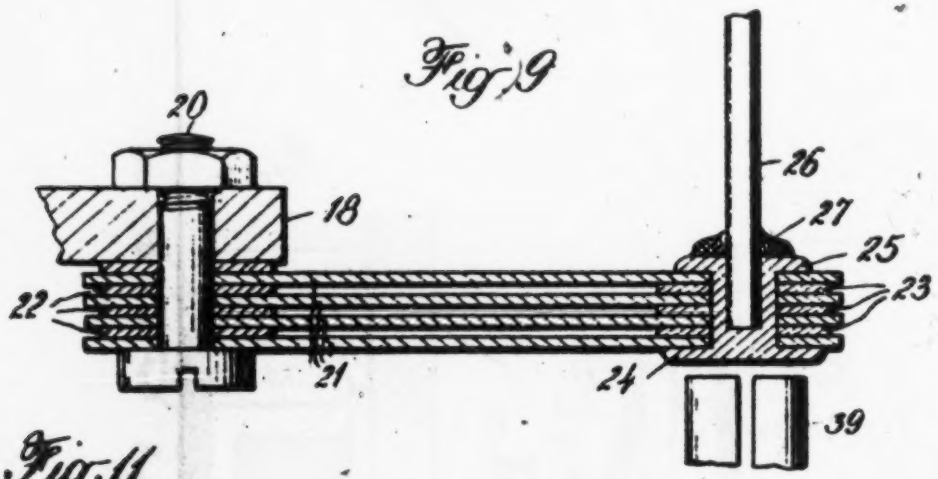

Fig. 11

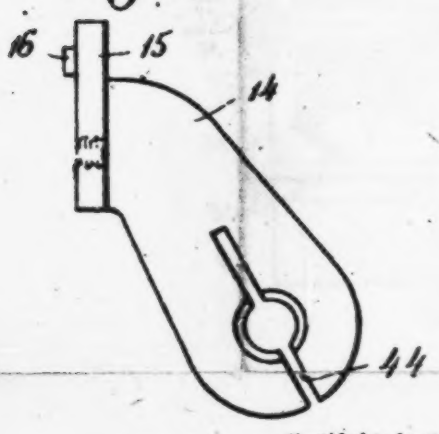

Fig. 10

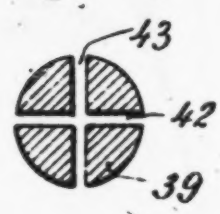

Certified to be the drawings referred to in the specification hereunto annexed.

APPLICANT
Markus C Hopkins

New York, N.Y. U.S.A. March 8 1926

By Pennie Davis, Marvin & Edmonds
ATTORNEY

STIPULATION AS TO TRANSCRIPT.

(Filed February 28, 1930.)

IT IS HEREBY STIPULATED by and between the parties herein through their respective counsel, that the printed record on appeal in the United States Court of Appeals shall consist of the following papers and documents:

1. Bill of complaint.

2. Answer.

3. Amendment to answer.

4. Statement of the evidence in narrative form as agreed by the parties.

5. Plaintiff's Exhibits Nos. 1, 2, 5, 34, 35, 36.

6. Defendant's Exhibits Nos. 7, 11 to 11-L, 27, 28, 38, 39, 40, 41, 42, 43, 44.

7. The opinion of Honorable Hugh M. Morris, U. S. D. Judge.

8. Decree.

9. Notice of appeal and order allowing appeal.

10. Plaintiff's assignment of errors.

11. Citation.

12. This stipulation as to the contents of the record.

13. Clerk's certificate.

IT IS FURTHER STIPULATED AND AGREED that the following exhibits, namely, Plaintiff's Exhibits Nos. 3,

4, 31, 32, and Defendant's Exhibits Nos. 8, 9, 10, 10-A, 12, 12-A, 13, 13-A, 14, 14-A, 14-B, 15, 15-A, 15-B, 16, 20, 21, 23, 24, 25, 26, 29, 30, 31, 32, 33, 34, 35, 36 and 37 may be treated as physical exhibits and shall be produced in the Court of Appeals at the hearing and argument of this appeal.

(Sgd.) PENNIE, DAVIS, MARVIN & EDMONDS,
Attorneys for Plaintiff-Appellee.

(Sgd.) DARBY & DARBY,
Attorneys for Defendant-Appellant.

Dated: New York, N. Y.,
February 24, 1930.

ORDER APPROVING STIPULATION AS TO TRANSCRIPT.

(Filed February 28, 1930.)

And now, to wit, this twenty-eighth day of February, A. D. 1930, upon motion of Samuel E. Darby, Jr., Esq., of counsel for defendant-appellant, it is

ORDERED by the Court that the foregoing stipulation be and hereby is approved, and the clerk is hereby authorized to certify the transcript of record on appeal, prepared in accordance therewith, and to transmit the same, together with the physical exhibits therein mentioned, to the United States Circuit Court of Appeals for the Third Circuit, at Philadelphia, Pennsylvania.

(Sgd.) HUGH M. MORRIS, *J.*

CLERK'S CERTIFICATE.

UNITED STATES OF AMERICA,
DISTRICT OF DELAWARE, } *ss:*

I, HENRY C. MAHAFFY, JR., Clerk of the District Court of the United States for the District of Delaware, do hereby certify that I have carefully compared the foregoing writings with their respective originals, and find the same to be true and correct copies thereof, so full and complete as the same now remain on file and of record in my office, being a complete exemplification of the record and proceedings in the case of Lektophone Corporation v. Miller Brothers Company, No. 712 in Equity, pending in said court, made up in accordance with the stipulation of counsel for the respective parties and order approving same filed in said cause.

IN WITNESS WHEREOF, I have hereunto set my hand and affixed the seal of said court, at Wilmington, in said district, this twenty-second day of March, A. D. 1930, and the Independence of the United States of America the one hundred and fifty-fourth.

(SEAL)

(Sgd.) H. C. MAHAFFY,
Clerk.

UNITED STATES OF AMERICA,
Eastern District of Pennsylvania,
Third Judicial Circuit, set:

I, William P. Rowland, Clerk of the United States Circuit Court of Appeals, for the Third Circuit, do hereby certify the foregoing to be a true and faithful copy of the original transcript of record in the case of Miller Brothers Company, Appellant, vs. Lektophone Corporation, Appellee, No. 4379, on file and now remaining among the records of the said Court, in my office.

In testimony whereof I have hereunto subscribed my name and affixed the seal of the said Court, at Philadelphia, this 26th day of March, in the year of our Lord one thousand nine hundred and thirty and of the Independence of the United States the one hundred and fifty-fourth.

Wm. P. Rowland, Clerk of the U. S. Circuit Court of Appeals, Third Circuit. (Seal United States Circuit Court of Appeals, Third Circuit.)

SUPREME COURT OF THE UNITED STATES

ORDER ALLOWING CERTIORARI—Filed May 5, 1930

The petition herein for a writ of certiorari to the United States Circuit Court of Appeals for the Third Circuit is granted. And it is further ordered that the duly certified copy of the transcript of the proceedings below which accompanied the petition shall be treated as though filed in response to such writ.

FILE COPY

MAY 24 19
CHARLES ELMORE C
CL

Supreme Court of the United States

OCTOBER TERM, 1929.

No. ~~272~~ 68

MILLER BROTHERS COMPANY,
Petitioner,

vs.

LEKTOPHONE CORPORATION,
Respondent.

JOINT MOTION TO ADVANCE AND ASSIGN THE CASE FOR HEARING WITH CASE NO. 520.

SAMUEL E. DARBY, JR.,
Counsel for Petitioner.

WILLIAM H. DAVIS,
Counsel for Respondent.

GALLO & ACKERMAN, Inc., 142 Liberty Street, 'Phones—Hitchcock 8078-9.

Supreme Court of the United States

OCTOBER TERM, 1929.

No. 772.

MILLER BROTHERS COMPANY,

Petitioner,

vs.

LEKTOPHONE CORPORATION,

Respondent.

JOINT MOTION TO ADVANCE AND ASSIGN THE CASE FOR HEARING WITH CASE NO. 520.

Come now counsel for the respective parties in the above entitled cause and move that this case be advanced and assigned for hearing with the case of Lektophone Corporation vs. Rola Company, October Term, 1929, No. 520, and counsel make the following brief statement of the matter involved, and the reasons relied upon in support of the motion:

This Court, on January 27th, 1930, issued a writ of certiorari to the Circuit Court of Appeals for the Ninth Circuit in Lektophone Corporation vs. Rola Company on petition of the Lektophone Corporation. The ground stated in Lektophone Corporation's petition for that writ was:

"A conflict as to the scope of patent claims, on the substantially the same evidence of prior art and

substantially the same type of accused device exist between the Court of Appeals for the Ninth Circuit and the Court of Appeals for the Third Circuit."

The conflicting decisions were Lektophone Corporation vs. Rola Company, 34 F. (2d), 764 (C. C. A., 9); Lektophone Corporation vs. Brandes Products' Corporation, 20 F. (2d), 155 (C. C. A., 3).

In the instant case the patent in suit is the same as that involved in the Rola case and the accused devices are essentially the same as in the Brandes case and as in the Rola case. The instant case was brought for final hearing before Morris, D. J., at Wilmington, Del., in May, 1929. On January 23rd, 1930, Judge Morris filed an opinion (37 F. [2d], 580, p. 581 and Rec., p. 14) in which he said:

"The evidence in the case at bar differs in no substantial particular from that in the Brandes case. Hence the decree of this Court in the pending case must be dictated by the decision of the Circuit Court of Appeals in the Brandes case."

Appeal was perfected to the Circuit Court of Appeals for the Third Circuit in the instant case and petitioner asked this Court to issue a writ of certiorari to the Circuit Court of Appeals for the Third Circuit before that Court had passed on the case. The grounds stated in the petition for this writ were:

"1. There is a direct conflict between the decisions of the Court of Appeals for the Third Circuit, relied upon by the District Court in the case at bar (20 F. [2d], 155), and the Court of Appeals for the Ninth Circuit (34 F. [2d], 764) and Second Circuit (16 F. [2d], 10 and 16 F. [2d], 7).

"2. This Court has granted a writ of certiorari in the Ninth Circuit case and justice will be expedited by bringing this case from the Third Circuit for hearing simultaneously with the Ninth Circuit case."

This Court issued a writ of certiorari to the Circuit Court of Appeals for the Third Circuit on May 5th.

In view of the fact that the issues in the present case are substantially identical with the issues in the Rola case, it is believed that the instant case should be advanced and assigned for argument with the Rola case.

Respectfully submitted,

SAMUEL E. DARBY, JR.,
Counsel for Petitioner.

WILLIAM H. DAVIS,
Counsel for Respondent.

FILE COPY

MAR 23 1
CHARLES ELMORE

IN THE

SUPREME COURT OF THE UNITED STATES

OCTOBER TERM, 1929

No. 772 68

MILLER BROTHERS COMPANY

Petitioner

against

LEKTOPHONE CORPORATION

Respondent

Petition for Writ of Certiorari to the Circuit Court of Appeals for the Third Circuit and Brief in Support Thereof

SAMUEL E. DARBY, JR.
Attorney for Petitioner

APPEAL PRINTING CO., 22 THAMES ST., NEW YORK CITY

INDEX

PAGE

Petition for Writ of Certiorari to the Circuit Court of Appeals for the Third Circuit 1

Summary and Short Statement of the Matter Involved 2

Reasons Relied Upon for the Granting of Writ of Certiorari 3

Brief of Petitioner in Support of Petition for Writ of Certiorari 5

The Opinions of the Courts Below 5

Jurisdiction 5

Statement 6

Statute 6

Specification of Errors 6

Argument 7

TABLE OF CASES CITED.

Alexander Millburn Co. *v.* Davis-Bournonville Co., 270 U. S. 390 5

Concrete Appliance Co. *v.* Gomery, 269 U. S. 177 5

I. T. S. Co. *v.* Essex, 272 U. S. 429 5

Lektophone Corp. *v.* Brandes Products Corp., 20 Fed. 2nd, 155 C. C. A. 3rd 2

Lektophone Corp. *v.* Crosley Radio Corp., unreported, U. S. D. C., O. (W. D.) 2

Lektophone Corp. *v.* Sylo Lighting Fixture Co., 16 Fed. 2nd, 7 2

Lektophone Corp. *v.* The Rola Company, 34 Fed. 2nd, 764 2

Lektophone Corp. *v.* Western Electric Co., 16 Fed. 2nd, 10 2

Section 4897 R. S. 6

IN THE

Supreme Court of the United States

OCTOBER TERM, 1929.

MILLER BROTHERS COMPANY, *Petitioner,*

against

LEKTOPHONE CORPORATION, *Respondent.*

Petition for Writ of Certiorari to the Circuit Court of Appeals for the Third Circuit and Brief in Support Thereof.

To the Honorable the Chief Justice and Associate Justices of the Supreme Court of the United States:

Your petitioner, Miller Brothers Company, respectfully prays for a writ of certiorari to the Circuit Court of Appeals for the Third Circuit to review a judgment entered by the United States District Court for the District of Delaware entered February 12, 1930, from which judgment appeal has been taken to the Circuit Court of Appeals for the Third Circuit. A transcript of the record in the case as it exists in the Court of Appeals for the Third Circuit is furnished herewith in accordance with Rule 35 of the rules of this Court.

Summary and Short Statement of the Matter Involved.

Respondent, Lektophone Corporation, is the owner of Hopkins Patent No. 1,271,529 involved in the litigation.

The Hopkins patent has been held by the Circuit Court of Appeals for the Second and Ninth Circuits, and the United States District Court for the Southern District of Ohio, Western Division, to be of very limited scope, if valid, and, by direct implication, to be invalid:

> *Lektophone Corporation* v. *The Rola Company*, 34 Fed. 2nd, 764, C. C. A. 9th, WILBUR, C. J.;
> *Lektophone Corporation* v. *Western Electric Co.*, 16 Fed. 2nd, 10, C. C. A. 2nd, MANTON, C. J.;
> *Lektophone Corporation* v. *Sylo Lighting Fixture Co.*, 16 Fed. 2nd, 7, C. C. A. 2nd, MANTON, C. J.;
> *Lektophone Corporation* v. *Crosley Radio Corporation*, unreported, U. S. D. C., O. (W. D.), HICKENLOOPER, D. J.

The Circuit Court of Appeals for the Third Circuit has held the patent to be valid and entitled to a broader scope:

> *The Lektophone Corporation* v. *Brandes Products Corporation*, 20 Fed. 2nd, 155 C. C. A. 3rd, BUFFINGTON, C. J.

This Court on January 27, 1930, granted a writ of certiorari to the Circuit Court of Appeals for the Ninth Circuit in the case of *Lektophone Corporation* v. *The Rola Company* (*supra*), apparently because of the divergency of opinion between the Second, Sixth and Ninth Circuit Courts, and the Third Circuit Court of Appeals.

The issues in the present case are substantially identical with the issues in the Ninth Circuit case. The District Court in Delaware rendered its decision after the decision was rendered by the Court of Appeals in the Ninth Circuit, and disposed of the case on the assertion that the District Court felt itself to be bound by the decision of its Circuit Court of Appeals, without passing on the merits of the controversy. Appeal was promptly lodged in the Court of Appeals for the Third Circuit whereupon this petition was filed so as to enable the present case to be heard by this Court at the same time that the *Rola* case from the Ninth Circuit is presented.

Reasons Relied Upon for the Granting of Writ of Certiorari.

The discretionary power of this Court is invoked upon the following grounds as set forth in Rule 35 of the rules of this Court:

1. There is a direct conflict between the decision of the Court of Appeals for the Third Circuit, relied upon by the District Court in the case at bar (20 Fed. 2nd, 155), and the Court of Appeals for the Ninth Circuit (34 Fed. 2nd. 764) and Second Circuit (16 Fed. 2nd, 10, and 16 Fed. 2nd, 7).

2. This Court has granted a writ of certiorari in the Ninth Circuit case and justice will be expedited by bringing this case from the Third Circuit for hearing simultaneously with the Ninth Circuit case.

WHEREFORE, your petitioner respectfully prays that a writ of certiorari be issued under the seal of this Court directed to the United States Circuit Court of Appeals

for the Third Judicial Circuit sitting at Philadelphia, Pennsylvania, commanding said Court to certify and send to this Court, on a day to be designated, a full and complete transcript of the record and all proceedings had in this cause to the end that this cause may be reviewed and determined by this Court; that the Circuit Court of Appeals for the Third Circuit be directed to reverse the judgment of the District Court of the District of Delaware and that the petitioner be granted such other and further relief as may seem proper.

SAMUEL E. DARBY, JR.,
Attorney for Petitioner.

Dated, New York, New York, March 26th, 1930.

State of New York, }
County of New York, } ss.:

SAMUEL E. DARBY, JR., being duly sworn, deposes and says: that he is the attorney for the petitioner herein; that he prepared the foregoing petition and that the allegations thereof are true as he verily believes.

SAMUEL E. DARBY, JR.

Subscribed and sworn to before me
this 26th day of March, 1930.

ROSE A. BATTERMAN,
Notary Public.

BRIEF OF PETITIONER IN SUPPORT OF PETITION FOR WRIT OF CERTIORARI.

The Opinions of the Courts Below.

The opinions of the Court of Appeals for the Second Circuit are reported at 16 Fed. (2nd) 10, and 16 Fed. (2nd) 7.

The opinion of the Court of Appeals for the Third Circuit is reported at 20 Fed. (2nd) 155.

The opinion of the Court of Appeals for the Ninth Circuit is reported at 34 Fed. (2nd) 764.

The opinion of the District Court for the District of Delaware in the case at bar is unreported but is found beginning at page 13 of the Record.

Jurisdiction.

The grounds of jurisdiction are:

1. The date of the judgment to be reviewed was February 12, 1930.

2. The judgment was rendered in a suit in equity brought under the Patent Statutes to determine the issues of validity and infringement of Letters Patent of invention.

3. The statute under which the jurisdiction is invoked is Section 240 (a) of the Judicial Code, 28 U. S. C., No. 347 as amended by the Act of February 13, 1925.

4. Cases believed to sustain the jurisdiction are:

I. T. S. Co. v. *Essex*, 272 U. S. 429;
Alexander Millburn Co. v. *Davis-Bournonville Co.*, 270 U. S. 390;
Concrete Appliance Co. v. *Gomery*, 269 U. S. 177.

Statement.

The facts are sufficiently stated in the petition.

Statute.

The section of the Statute involved for consideration on this appeal is 4897 R. S., as follows:

> "Any person who has an interest in an invention or discovery, whether as inventor, discoverer, or assignee, for which a patent was ordered to issue upon the payment of the final fee, but who fails to make payment thereof within six months from the time at which it was passed and allowed, and notice thereof was sent to the applicant or his agent, shall have a right to make an application for a patent for such invention or discovery the same as in the case of an original application. But such second application must be made within one year after the allowance of the original application. But no person shall be held responsible in damages for the manufacture or use of any article or thing for which a patent was ordered to issue under such renewed application prior to the issue of the patent."

Specification of Errors.

The errors which petitioner will urge if the writ of certiorari is allowed, are that the District Court in the District of Delaware erred:

1. in granting an injunction.
2. in decreeing the Hopkins patent to be valid.
3. in decreeing the claims of the Hopkins patent to be infringed.

4. in refusing to dismiss the bill.

5. in failing to hold that the Hopkins patent is invalid under Section 4897, R. S.

Argument.

Obviously, litigation will be minimized and justice expedited if the present controversy is heard and disposed of at the same time as is the Ninth Circuit case which involves the same patent, substantially the same structure alleged to infringe, and the identical issues of validity and infringement.

Respectfully submitted,

SAMUEL E. DARBY, JR.,
Attorney for Petitioner.

FILE COPY

OCT 3 1930

IN THE

SUPREME COURT OF THE UNITED STATES

OCTOBER TERM, 1930

No. 68

MILLER BROS. COMPANY

Petitioner

against

LEKTOPHONE CORPORATION

Respondent

BRIEF FOR PETITIONER

SAMUEL E. DARBY, JR.

Attorney for Petitioner

APPEAL PRINTING CO., 22 THAMES ST., NEW YORK CITY

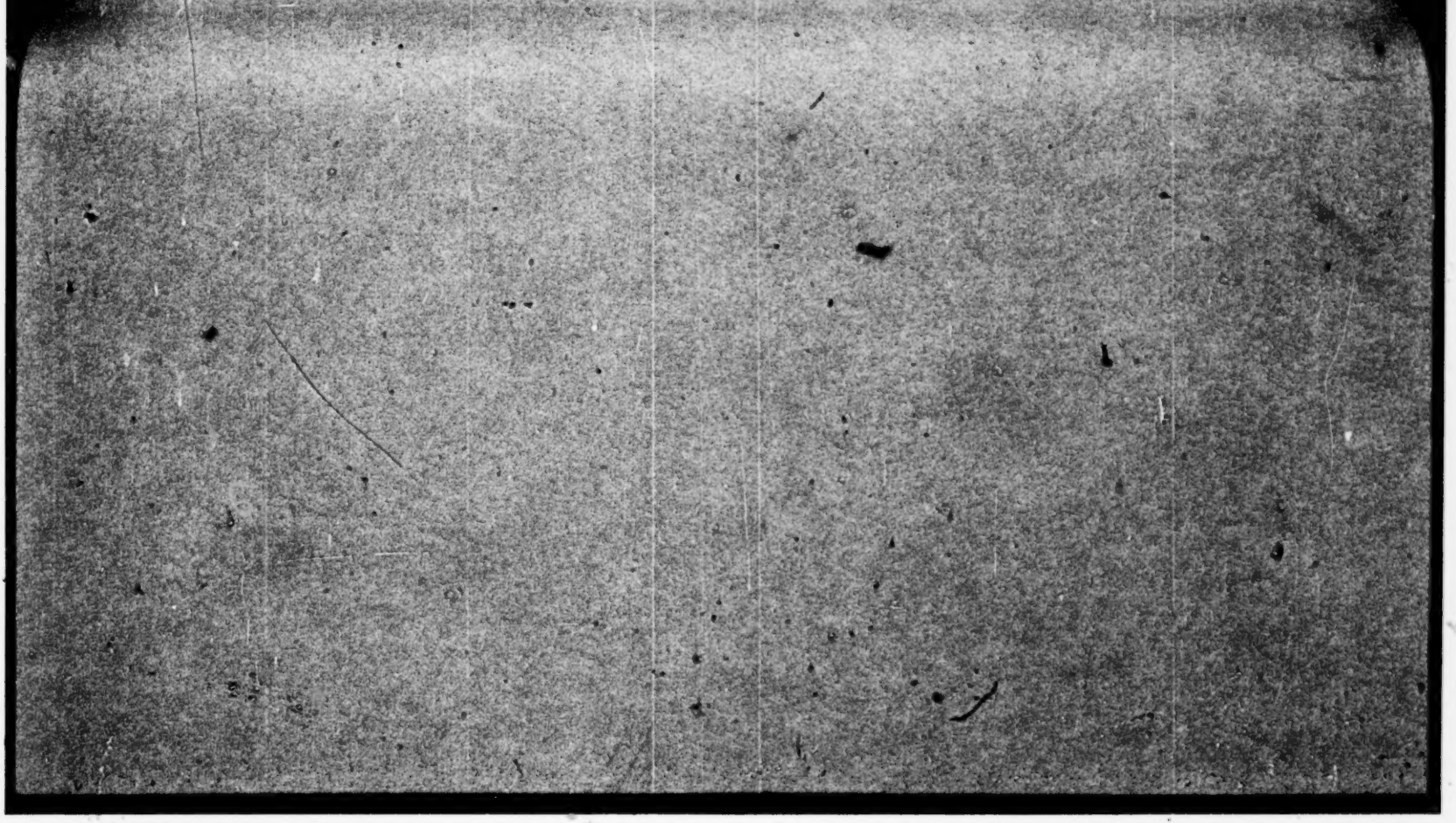

INDEX

	PAGE
Opinions of the Courts below	1
Jurisdiction	2
Assigned errors to be urged	2
Conflict of decisions	3
Statement of the case	3
Second Circuit Litigation	3
Third Circuit Litigation	4
Sixth Circuit Litigation	4
Ninth Circuit Litigation	5
Summary of Previous Litigations	5
Parties	6
Argument	7
Order of argument	7
First Point.—The Hopkins Patent is invalid under Section 4897 R. S.	7
Second Point.—The Hopkins Patent is not infringed	13
Subject-matter of the Hopkins patent	13
Structures charged to infringe	16
The claims of the Hopkins patent	18
Summary and conclusion on infringement	32
The Decision of the C. C. A. 3rd on infringement	33
Third Point.—The Hopkins patent is invalid as anticipated and wanting in invention	35
Limitation of size	38
Decision of C. C. A. 3rd on validity	40
1. Blasting	41
2. Lumiere reproducer not commercial	44
3. Victor Talking Company using Licensed Loud Speaker	45
4. Bodily movement of the cone	47
Conclusion	49

TABLE OF CASES.

PAGE

Chapman *v.* Wintroath, 252 U. S. 126 11
Concrete Appliance Co. *v.* Gomery, 269 U. S. 177 2
Consolidated Roller Mill Co. *v.* R. R. Walker, 138 U. S. 133 28
Dwight & Lloyd Sintering Co. *v.* Greenawalt, 27 Fed. 2nd, 823 10
I. T. S. Rubber Co. *v.* Essex Rubber Co., 272 U. S. 429 2
Lektophone Corp. *v.* Sylo, 11 Fed. 2nd, 421 3
Lektophone Corp. *v.* Sylo (C. C. A.), 16 Fed. 2nd, 7 .....4, 25
Lektophone Corp. *v.* Western Electric Co., 20 Fed. 2nd, 150 4
Lektophone Corp. *v.* Western Electric Co. (C. C. A.), 16 Fed. 2nd, 10 .....4, 31
Lektophone Corp. *v.* Brandes, 16 Fed. 2nd, 934 4
Lektophone Corp. *v.* Brandes (C. C. A.), 20 Fed. 2nd, 165 .....1, 3, 4, 34, 41
Lektophone Corp. *v.* Crosley (Unreported) 4, 26, 43
Lektophone Corp. *v.* Rola, 27 Fed. 2nd, 758 .....5, 27, 40
Lektophone Corp. *v.* Rola (C. C. A.), 34 Fed. 2nd, 764 .....2, 3, 5
Lektophone Corp. *v.* Miller Bros., 37 Fed. 2nd, 580 .. 1
Milburn Co. *v.* Davis-Bournonville Co., 270 U. S. 390 2
Weston Electrical Instrument Co. *v.* Empire Electrical Instrument Co., 136 Fed. 599 9
White *v.* Mechanics Securities Corp., 269 U. S. 283 .. 2

TEXT BOOK.

Walker on Patents, Sixth Edition 28

STATUTE.

Section 4897 R. S. 7

IN THE

Supreme Court of the United States

OCTOBER TERM, 1930.

No. 68.

MILLER BROTHERS COMPANY,

Petitioner,

v.

LEKTOPHONE CORPORATION,

Respondent.

BRIEF FOR PETITIONER.

The present case is a patent infringement suit, before this Court on writ of certiorari issued to the Circuit Court of Appeals for the Third Circuit.

Opinions of the Courts Below.

The Court below (United States District Court for the District of Delaware) rendered an opinion (Rec. p. 13; 37 Fed. [2] 580), holding the patent in suit to be valid and infringed by petitioner. The District Court did not pass on the merits of the case, holding, in effect, that it was bound by the decision of its Court of Appeals in *Lektophone Corporation* v. *Brandes* (20 Fed. [2] 155), in a suit involving the same patent. An appeal to the Court of Appeals for the Third Circuit was filed by petitioner, but

because this Court had granted a writ of certiorari to the Circuit Court of Appeals for the Ninth Circuit in *Lektophone Corporation* v. *Rola* (34 Fed. [2] 764), petition for certiorari was filed in this case without awaiting the presentation to and decision by the Court of Appeals for the Third Circuit, so that the present case could be considered by this Court and disposed of at the same time the *Rola* case is considered and disposed of.

Jurisdiction.

The date of the judgment to be reviewed was February 12, 1930 (Rec. p. 16). The case is here on a writ of certiorari granted by this Court on May 5, 1930, on petition filed within three months of the date of said judgment. The jurisdiction of this Court is invoked under Judicial Code 240 (a), as amended by the Act of February 13, 1925. The cases believed to sustain the jurisdiction are:

White v. *Mechanics Securities Corporation, etc.*, 269 U. S. 283;

I. T. S. Rubber Company v. *Essex Rubber Company*, 272 U. S. 429;

Alexander Milburn Company v. *Davis-Bournonville Company*, 270 U. S. 390;

Concrete Appliances Company v. *Gomery*, 269 U. S. 177.

Assigned Errors to be Urged.

Of the errors assigned (Rec. p. 19) it is intended to urge the following:

(1) The District Court erred in decreeing the Hopkins patent to be valid.

(2) The District Court erred in decreeing infringement of any of the claims of the Hopkins patent by petitioner's structures.

(3) The District Court erred in failing to hold the Hopkins patent to be invalid under Section 4897 R. S.

Conflict of Decisions.

The chief ground presented by petitioner for the writ of certiorari issued by this Court was the conflict between the decision of the Court below (Rec. p. 13; 37 Fed. [2] 580), and the decision of the Court of Appeals for the Third Circuit by which the Court below concluded it was bound (20 Fed. [2] 155), and the decision of the Court of Appeals for the Ninth Circuit in *Lektophone* v. *Rola* (34 Fed. [2] 764).

Statement of the Case.

The suit is based on Hopkins patent No. 1,271,529, for a phonographic sound reproducing device, called in the patent an "acoustic device." The patent states on its face that it is a division of an application filed by Hopkins on July 14, 1913 (Rec. p. 317). The parent application issued as patent No. 1,271,527.

Both of these patents have been in litigation in the Second, Third, Sixth and Ninth Circuits.

Second Circuit Litigation.

The United States District Court for the Eastern District of New York held both of the Hopkins patents to be valid and infringed (*Lektophone* v. *Sylo*, 11 Fed. [2] 421). The United States District Court for the Southern District of New York held the parent patent (No. 1,271,527)

to be invalid, and the Hopkins patent here involved (No. 1,271,529) to be of very limited scope and not infringed by the structure before it (*Lektophone* v. *Western Electric*, 20 Fed. [2] 150). The Court of Appeals for the Second Circuit reversed the Eastern District Court in the *Sylo* case (16 Fed. [2] 7) and affirmed the Southern District Court in the *Western Electric* case (16 Fed. [2] 10) holding the parent patent to be invalid and the patent here in suit to be extremely limited in scope.

Third Circuit Litigation.

The District Court of New Jersey held both of the Hopkins patents to be invalid (*Lektophone* v. *Brandes*, 16 Fed. [2] 934). The Third Circuit Court of Appeals affirmed the District Court as to the invalidity of the parent Hopkins patent (1,271,527) but reversed the District Court as to the patent here in suit, and held it to be valid and infringed by the structures before the Court (*Lektophone* v. *Brandes*, 20 Fed. [2] 155). It was this decision which the District Court of Delaware concluded was so binding in effect upon it as to preclude its independent judgment on the merits in the present case.

Sixth Circuit Litigation.

The Court for the Southern District of Ohio, Western Division (Judge HICKENLOOPER), in an unreported decision (copies of which, however, will be supplied this Court), held that both of the Hopkins patents were so limited in scope, if valid, as not to be infringed by the structure before the Court (*Lektophone* v. *Crosley*). By plain inference, readily gained on reading the opinion, the Court was of the opinion that both patents were invalid but, finding non-infringement, such finding was dis-

positive of the case without necessitating a ruling on validity. However, the Court expressly disagreed with the reasoning and conclusion of the Court of Appeals for the Third Circuit. The decision of Judge HICKENLOOPER was appealed from by respondent, Lektophone Corporation, to the Court of Appeals for the Sixth Circuit, but the appeal, though argued and submitted, has not been disposed of by that Court.

Ninth Circuit Litigation.

The District Court for the Northern District of California held the parent Hopkins patent (No. 1,271,527) to be invalid (*Lektophone* v. *Rola*, 27 Fed. [2] 758). The patent here in suit (No. 1,271,529) was held by the Court to be extremely limited and hence not infringed by the structure before the Court (which structure was substantially identical in all material respects with petitioner's structures in the present case). Here again the Court expressly differed with the Court of Appeals for the Third Circuit in reasoning and conclusion, and, by plain inference, concluded that the Hopkins patent was invalid, although the ruling of non-infringement was dispositive of the case.

The Court of Appeals for the Ninth Circuit affirmed the decision of the California District Court (*Lektophone* v. *Rola*, 34 Fed. [2] 764).

Summary of Previous Litigations.

From the foregoing it will be seen that the parent Hopkins patent (No. 1,271,527) has been held to be invalid by all of the Courts that have passed upon the validity thereof, with the exception of the Eastern District Court of New York.

The divisional application, which matured into the patent in suit (No. 1,271,529) has, either directly or by inference, been held to be invalid by the New Jersey, Ohio and California District Courts and the Ninth Circuit Court of Appeals. The patent has likewise been held, if valid, to be so limited as to be not infringed by a structure substantially the same as petitioners' by the District Courts of the Southern District of New York, New Jersey, Ohio and California, and by the Circuit Courts of Appeals of the Second and Ninth Circuits. In other words, the Court of Appeals for the Third Circuit stands alone and opposed to the Courts of Appeals of the Second and Ninth Circuits and the District Court of Ohio. Only two decisions out of nine have held the patent in suit broad enough to cover petitioner's structures. One of these (Eastern District of New York) was reversed, and the other (C. C. A. 3rd) is followed only in one Circuit, viz.: the Third Circuit.*

Parties.

Throughout all of the foregoing litigations, and in the present case, the Hopkins patents were owned by Respondent, Lektophone Corporation. Petitioner, Miller Brothers (defendant below) is a Delaware corporation, and sells at retail various commodities, including electrical apparatus. The sale of two loud speakers (known as "Fada" loud speakers) intended to be used in connection with radio receivers for the reception of broadcast news and musical programs, constitutes the act of infringement on which the bill of complaint is based. The "Fada" loud speaker is manufactured by F. A. D. Andrea,

* Since dictating the foregoing, the United States Court for the Eastern District of New York has rendered an opinion in Lektophone Corporation v. Colonial Radio Corporation, likewise sustaining the patent, following the Circuit Court of Appeals for the Third Circuit and ignoring the decisions in the Sixth and Ninth Circuits and the effect of the opinion of its own Court of Appeals in the *Sylo* and *Western Electric* cases.

Inc., a New York corporation, at Long Island City, New York. F. A. D. Andrea, Inc. likewise manufactures the nationally distributed "Fada" radio receiving set.

The issues thus presented by the foregoing statement of facts are:

(1) Whether or not the Hopkins patent is valid; and

(2) Whether or not the Hopkins patent is infringed by the "Fada" loud speakers.

ARGUMENT.

Order of Argument.

In presenting petitioner's case we first raise a statutory bar to the validity of the patent. This is presented first because, in our opinion, it is dispositive of the suit. Therefore, the order of argument in behalf of petitioner will be as follows:

(1) The Hopkins patent is invalid under Section 4897 of the Revised Statutes.

(2) The Hopkins patent is not infringed.

(3) The Hopkins patent is invalid because of anticipation and want of invention.

FIRST POINT.

The Hopkins Patent Is Invalid Under Section 4897 R. S.

This defense was raised for the first time in the present case. Therefore, the question has not been passed upon in any of the previous litigations involving the Hopkins patent.

Section 4897 R. S. recited at the time the Hopkins application was filed—

"Any person who has an interest in an invention or discovery, whether as inventor, discoverer, or assignee, for which a patent was ordered to issue upon the payment of the final fee, but who fails to make payment thereof within six months from the time at which it was passed and allowed, and notice thereof was sent to the applicant or his agent, shall have a right to make application for a patent for such invention or discovery the same as in the case of an original application. *But such second application must be made within two years after the allowance of the original application.* But no person shall be held responsible in damages for the manufacture or use of any article or thing for which a patent was ordered to issue under such renewed application prior to the issue of the patent."*

The facts in this case pertinent to the foregoing section of the statute are as follows:

(1) The original application was filed on July 14, 1913 (Rec. pp. 324, 432).

(2) The application (containing claims therein numbered 25, 26 and 27 which were subsequently divided from the parent application and formed the basis of the patent in suit) *was allowed on April 11, 1916* (Rec. p. 413). The application then became forfeited for non-payment of the final fee on October 11, 1916.

(3) On March 22, 1918 (twenty days less than the two-year statutory period under Section 4897 R. S.) a petition to renew the application was filed (Rec. p. 414).

(4) On March 29, 1918 (twelve days less than the two-year statutory period, and before action by the Patent Office on the petition to renew), an amendment was filed

* Italics in this brief are ours unless otherwise stated.

voluntarily canceling Claims 25, 26 and 27 (Rec. p. 416) with the statement (Rec. p. 417)—

> "Claims 25, 26 and 27 have been canceled, as those claims will be incorporated, together with others, in a divisional application directed to the tympanum or diaphragm *per se*."

As above stated, the cancelation of these claims was not required by the Patent Office, but was *the voluntary act of the applicant.*

(5) On April 17, 1918 (*six days after the two-year statutory period*) the divisional application for the patent in suit was filed (Rec. pp. 288, 317), directed to and claiming the diaphragm *per se*, viz.: *the subject-matter of claims 25, 26 and 27*, **originally allowed on April 11, 1916.**

Thus, it will be seen that the application for the patent in suit was filed on April 17, 1918, *more than two years subsequent to the original allowance of the subject-matter thereof, viz.: April 11, 1916.* That is what is expressly prohibited by the provisions of Section 4897 R. S. The fact that the Commissioner of Patents exceeded his authority in granting the patent under such circumstances, constitutes a valid defense to a suit for infringement. *Weston Electrical Instrument Co.* v. *Empire Electrical Instrument Co., et al.*, 136 Fed. 599.

It will be noted that although Hopkins renewed his application for patent for the subject-matter of the patent in suit within two years of allowance of the claims directed thereto, those claims for the subject-matter of the patent in suit, viz.: the diaphragm *per se*, were voluntarily canceled on March 22, 1918. Therefore, *from March 22 1918, until April 17, 1918, there was no application pending in the Patent Office directed to and claiming the invention of the patent in suit.* The two year statutory period ex-

pired April 11, 1918. The divisional application, viz.: the application for the patent in suit, was filed on April 17, 1918, *after the two-year period allowed by Section 4897 of the statute.*

That the divisional application constituted a renewed application for patent for the subject-matter of the diaphragm *per se* cannot be seriously questioned. The Court of Appeals for the Second Circuit in *Dwight & Lloyd Sintering Co.* v. *Greenawalt* (27 Fed. [2] 823), said, at page 831, speaking through Judge LEARNED HAND in a somewhat analogous situation involving this section of the statute—

> "In the case at bar the original application was allowed on March 14, 1908, before any of the 'ignition' patents in suit had been divided out. It was renewed on February 17, 1910, 13 days after patent 1,433,350 had on February 4th been divided out. *The division was itself a renewal of the application, so far as concerns the inventions which it contained*, and, as it was within 2 years after allowance, it was seasonable. The divided application was thereupon itself allowed on May 26, 1911, but was permitted to lapse, supposedly because of failure to pay the statutory fee. It was renewed on April 26, 1912, 11 months after the allowance of May 26, 1911, but over 4 years after the allowance of March 14, 1908.
>
> "If the division is to be treated as a step in the one continuous application, then the case is directly within our ruling in Weston Electrical Co. *v.* Empire Electrical Co. (C. C. A.) 36 Fed. 599. There we held that the phrase in Revised Statutes, Sec. 4897 (35 U. S. C. A. Sec. 38; Comp. St. Sec. 9443), 'after the allowance of the original application', meant its first allowance, and that an applicant might not indefinitely withhold his patent in terro-

> rem, by tacking successive periods of 2 years at his pleasure, meanwhile making such amendments as would keep it alive. Considering, as we do, the division as not a new application and not the 'original application', that rule applies equally to this situation. We can see no conceivable reason why a division should, as regards this matter, be treated in another way than any other amendment of which it is only an instance."

This Court, in *Chapman* v. *Wintroath*, 252 U. S. 126, in discussing the effect of the two-year limitation appearing throughout the various sections of the patent statutes, stated, with respect to Section 4897 (at p. 136):

> "Section 4897 of the Revised Statutes (Act of July 8, 1870, 16 Stat. at L. 202, chap. 230, Sec. 35, Comp. Stat. Sec. 9143, 7 Fed. Stat. Anno. 2d ed. p. 188), in dealing with the renewal of an application in case of failure to pay the final fee within six months of notice that a patent has been allowed, provides that another application may be made for the invention 'the same as in the case of an original application'. But such application must be made *within two years* after the allowance of the original application."

After referring to a similar two-year provision under Section 4920 R. S., this Court then summarized, with reference to the two-year provision (p. 136):

> "Thus through all of these statutes runs the time limit of two years for the filing of an application, there is no modification in any of them of the like provision in Rev. Stat. Sec. 4886, as amended, *and no distinction is made between an original and a later or a divisional application, with respect to this filing right.*"

We submit as obvious, therefore, that the application for the patent in suit, having been filed more than two years subsequent to the first allowance of the subject-matter thereof, during and at a time when there was not pending in the Patent Office an application for a patent directed to that subject-matter, the patent is invalid because of the provisions of Section 4897 R. S. The evils which that section of the statutes sought to cure are present in full force in the present instance. It is quite apparent that Hopkins sought to expand his patent unduly by filing a voluntary, so-called "divisional application" wherein he separated the sound reproducer *per se*, from its phonographic actuating mechanism, after the practice sometimes attempted in the case of reissue patents. By so doing, he attempted to expand the divisional patent beyond what was originally intended to be granted by the claims which were allowed in the parent application. Under these circumstances the Statute should be strictly applied.

The invalidity of the Hopkins patent, because of this statutory bar, apparently escaped unnoticed in the previous litigations involving the patent. Specifically, it was not called to the attention of the Court of Appeals for the Third Circuit, and we confidently assert as our belief that had it been called to its attention, that Court would not have held that the Hopkins patent was valid.

If this Court comes to the conclusion that the Hopkins patent is invalid because of Section 4897 R. S., the case is disposed of, and the remaining points presented in this brief require no consideration.

SECOND POINT.

The Hopkins Patent Is Not Infringed.

We go from the statutory defense to the question of infringement, before considering the other reasons why the Hopkins patent is invalid, because lack of infringement is so evident that this defense, likewise, is dispositive of the case wholly irrespective of whether or not the patent is valid. In order to pass on the question of infringement it becomes necessary, of course, to understand the subject-matter of the patent and the monopoly claimed thereby.

Subject-Matter of the Hopkins Patent.

By comparing the single sheet of drawings of the Hopkins patent in suit (Rec. p. 316) with Figure 3 of the drawings of the parent application (Rec. p. 434) it will be seen that the disclosures are identical. Inasmuch as the patent in suit is stated to be a division of the parent application (Rec. p. 317, lines 94 to 103, inclusive), and inasmuch as the prosecution of the parent application constitutes part of the file history of the patent in suit, it is believed that the matter of consideration of the Hopkins disclosure will be simplified by referring to the original patent insofar as it is pertinent to the present controversy.

The invention is stated to relate:

> "to instruments which reproduce sounds, *such as the talking machine and the phonograph*, and is particularly directed to the attainment of a direct propagation in free air *from a record* of self-sustaining sound waves substantially corresponding to *the original recorded sounds* in intensity or am-

> plitude as well as in pitch and timber, as distinguished from an initial generation of violent air disturbances in a confined space and a subsequent transformation of such disturbances into self-sustaining sound waves by means of the megaphone or trumpet, commonly employed with most existing machines" (patent p. 1, lines 13 to 26, Rec. p. 437).

Again, it is stated (patent p. 1, lines 73, *et seq.*):

> "It is an object of the present invention to regenerate the *recorded* sounds *directly from the record*, without the interposition of a confined body of air and without the employment of a restrictive transformer, such as a horn."

Continuing, the specification points out in the succeeding paragraph:

> "*The 'sound regenerator,'* in the case of the present invention, *comprises a tympanum* of relatively great area freely exposed to unconfined air, in which the sounds are to be propagated, and a mechanical transmission which faithfully transmits *the vibrations produced by the record*, etc."

(The transmission feature constitutes the subject-matter to which the parent application was ultimately confined.)

The specification then continues (patent p. 1, line 95, Rec. p. 437):

> "*The invention consists, in providing a tympanum of novel construction*, which is capable of responding to the high frequency vibrations employed in the reproduction of sounds, and of imparting these vibrations to a large body of air; *in providing a suitable mounting for this tympanum to permit it to exercise its function;* and in providing a vibration transmission for receiving the vibratory move-

ment *from the record* and transmitting this movement to the tympanum without change of character and appreciable loss of energy."

The patent in suit, in lieu of the foregoing paragraph, states as follows (patent p. 1, line 94, Rec. p. 317):

> "*The invention consists, briefly, in the provision of a tympanum of novel construction,* which is capable of responding to the high frequency vibrations employed in the reproduction of sounds, and of imparting these vibrations to a large body of air; and it is to be considered as a division of the invention shown and described in my prior application, renewed March 22, 1918, No. 224,048."

(The application thus identified is, of course, the parent application which matured as patent No. 1,271,527.)

The patent then proceeds to described a *phonograph* which, referring to Fig. 3 of the drawing (Rec. p. 434, or Rec. p. 316) consists of the usual rotatable table F on which is supported a disc phonograph record, with a stylus needle resting thereon to travel in the groove of the recorded sound. The needle is mechanically connected by levers to the apex M, of a paper cone L, *shaped from a single piece of material* so as to have a *plane peripheral portion* l, and a *cone portion* l^1. The edge of the *plane peripheral* portion l, is clamped between heavy metallic rings K and K^1, which rings, clamped together, are supported by the spider arms J.

The paper cone L, with its plane peripheral portion, is called in the patent a "tympanum" and, as is pointed out in the specification of the patent (p. 2, lines 73, *et seq.*, Rec. p. 318) *consists of a single piece of material, circular in shape,* so formed or shaped that its *central portion* constitutes a cone, and the *peripheral portion* constitutes

a flat plane, the peripheral edge of which is tightly clamped between the "two ponderous rings" (patent p. 2, line 59, Rec. p. 318).

The operation of the device, thus shown and described, is as follows: Vibrations imparted to the stylus or needle by the recorded sound in the groove of the disc record of the phonograph, are imparted to the apex of the cone portion of the tympanum, causing the entire tympanum (both the cone portion and peripheral portion) to vibrate and reproduce the sounds corresponding to the recorded sounds on the phonograph record. It will thus be seen that the Hopkins patent is directed to *a particular type* of acoustic device *for reproducing recorded sound from a disc phonograph record.*

Petitioner's Structures Charged to Infringe.

The Fada loud speakers before the Court under the charge of infringement, are known as "Fada No. 14 loud speaker" and "Fada No. 15 loud speaker." They differ from each other only in size. To avoid any confusion therebetween they will be hereinafter referred to as the small Fada structure and the large Fada structure.

The construction of the Fada loud speakers can be plainly seen from the physical apparatus before the Court, as well as from Plaintiff's Exhibit No. 5, Rec. p. 451, where the undisputed dimensions of the two devices are given. The Fada loud speaker is employed as the reproducing device of a radio receiving set. *It is used in an art entirely foreign to the phonograph art.* The use of the Hopkins device in the radio art is not even remotely suggested by the Hopkins patent. Indeed, Hopkins admitted that he never contemplated its use in radio (XQ62, Rec. p. 228). The Fada speaker is electrically actuated by received

wireless signals. It is excited by a local source of current. Such a locally excited loud speaker is known in the radio art as a "dynamic" loud speaker. It is designed to be used, and is used in practice, within a resonance chamber or cabinet where the surrounding air is confined (Rec. pp. 53, 54). The sound producing mechanism consists of a frustrum of a cone, viz.: a cone with its apex cut off. The free edge of the cone frustrum is secured to a porous cloth rim, one edge of which is detachably fastened to an annular metal ring by means of a circular wire extending around the annular ring, and lying in a groove thereof. The ring is located in front of the cone frustrum, and is substantially V-shaped in cross section. The Fada cone frustrum is supported at its rear by three springs.

It may be noted that the Fada loud speaker is substantially identical with the Rola loud speaker before this Court in *Lektophone* v. *Rola*, the only material difference being that the Rola loud speaker employs a leather rim positioned between the metal ring and the cone frustrum, whereas Fada employs a porous cloth rim.

In addition to the radically different uses to which the Hopkins and Fada devices are put, the following outstanding structural differences will be readily apparent upon inspection:

(1) Hopkins employs a *cone*, *i. e.*, a converging circular structure with an apex. A cone, in the true sense of the term, is necessary for the operation of the Hopkins Device.	(1) The Fada structure employs a frustrum of a cone, *i. e.*, a converging circular structure *without an apex*.
(2) Hopkins employs as his sound reproducing element, a cone provided with	(2) Fada employs no plane peripheral portion of sound reproducing mate-

a plane peripheral portion formed of the same piece of vibratile material.

rial. On the contrary, Fada employs a rim of porous cloth which does not vibrate to produce sound but actually *absorbs* sound (Rec. pp. 42, 43).

(3) The peripheral edge of the Hopkins sound producer is clamped between ponderous rings, and the support of the cone is thus secured.

(3) In the Fada structure, the sound producer is supported at its center by three springs, and is *not* clamped at its peripheral edge by anything (Rec. pp. 48-50).

The Claims of the Hopkins Patent.

We will now refer to the claims of the patent (Rec. p. 319).

1. It will be seen that all of the claims specify, in one form or another, an acoustic device *comprising a tympanum rigidly supported or mounted at its periphery.*

Let us refer to the Hopkins patents and the file histories thereof to ascertain what is meant by the term "tympanum" as used in the claims, for it is the "tympanum" that is clamped at its periphery.

On page 2 of the original specification as filed (Rec. p. 328, near bottom of page), it is stated:

> "*The 'sound regenerator'* in the case of the present invention *comprises a tympanum* of a relatively great area freely exposed to the air in which the sounds are to be propagated, as such," etc. * * *

Substantially the same language appears in the patent in suit as issued (p. 1, l. 73 *et seq.*, Rec. p. 317).

Again, on page 3 of the original application (Rec. p. 329), the following statement appears:

> "*The invention consists in providing a tympanum of novel construction* which is capable of responding to the high frequency vibrations employed in the reproduction of sounds," etc. * * *

Substantially the same language is employed in the patent in suit as issued (p. 1, l. 94, Rec. p. 317).

Again, on page 6 of the original application as filed (Rec. p. 332), appears the following language (at the bottom of the page):

> "*A tympanum L of light vibratile material* has an *annular plane peripheral portion l*, the outer edge of which *peripheral portion l*, is tightly gripped between the ponderous rings K, K[1], and a *central conical portion l'* rising from the inner edge of the annular plane *peripheral portion*."

The language of the patent in suit as issued is substantially the same (Patent p. 2, l. 72 *et seq.*, Rec. p. 318).

Finally, on page 7 of the application as originally filed (Rec. p. 333, near bottom of page), it is stated:

> "*It is of vital importance that the tympanum be made of crisp, strong material*, having considerable rigidity within itself, *and it is also of vital importance that the tympanum as a whole* be extremely light and have as little inertia as possible without a weakening effect. The tympanum is shown of conical form with a smooth surface, and this has been found to be very satisfactory. The conical shape is given the tympanum so that shocks or vibrations impressed upon the apex of the cone in a direction towards its base will move the whole cone bodily, the strains being imparted edgewise of the material and no wave motions being set up in the thin material of the cone. The curvature of the walls of the cone preclude the setting up of waves

> in the material *and the intended object, a simultaneous movement of the whole conical portion of the tympanum, is obtained.*"

This identical language appears in the patent as issued (Patent, p. 2, l. 103, Rec. p. 318).

Summarizing the foregoing, it will be seen:

1. The asserted invention of the patent is the novel construction of the "tympanum."

2. The "tympanum" as a whole is the "sound regenerator" and is made of light vibratile material.

3. The "tympanum" is formed of one piece, and is depressed in the center so that it has *a conical portion* terminating in an apex, and *a plane peripheral portion* forming a flat rim or ring at its periphery.

4. The conical shape is given to the central portion of the tympanum, as stated,

> "so that shocks or vibrations impressed upon the apex of the cone in a direction towards its base *will move the whole cone bodily*, the strains being imparted edgewise to the material and *no wave motions being set up in the thin material of the cone*. The curvature of the walls of the cone preclude the setting up of waves in the material and the intended object, the simultaneous movement of the whole *conical portion of the tympanum*, is obtained" (Patent, p. 2, l. 113, Rec. p. 318).

From the foregoing it will be quite apparent that the term "tympanum" can only be applicable to *the sound reproducing element*, viz., the single piece of vibratile material shaped so as to have a plane peripheral portion and a conical portion. The patent specifications, as well as the drawings preclude any other interpretation.

Applying this definition to the first element of all of the claims it will be seen that the Fada structures do not employ "a tympanum rigidly supported at its periphery." The tympanum in the Fada structure, *i. e.*, the light vibratile material constituting the sound reproducer, is the paper forming the cone frustrum. The paper is *not* "rigidly supported at its periphery." Instead, it is *movably* connected to the sound absorptive porous cloth ring. It would not operate successfully if it *was* rigidly supported at its periphery. Its support is effected by the three springs at its base (Rec. pp. 49, 50). Thus, at the outset, it is quite apparent that neither of the Fada structures infringes any claim of the Hopkins patent.

2. Claims 1, 2, 3, 5, 6 and 7 also recite that *the tympanum must exceed nine inches in diameter.* Having in mind, as above established, that the tympanum consists of the light vibratile sound producing member, a reference to Plaintiff's Exhibit 5 (Rec. p. 451) shows that the diameter of the tympanum of the Fada structures (designated by the dimensional line b) in the large speaker is *eight and one-half inches*, and in the small speaker is, *seven inches.* Thus, instead of having a tympanum "exceeding nine inches in diameter" within Hopkins' claims, both of the Fada structures employ a tympanum *less than nine inches in diameter*, which Hopkins expressly disclaimed.

We might pause here to consider various aspects of this dimensional limitation in the Hopkins claims.

The Hopkins application as originally filed, contained the following statement on page 7 of its specification (Rec. p. 333):

> "IF SATISFACTORY REGENERATION OF SOUNDS FROM A RECORD IS TO BE HAD, *the whole diameter of the tym-*

> *panum, that is, the diameter of the aperture in the rings K, K', should exceed nine inches* in order that the conditions may be fulfilled which are called for by correlation existing between the range of wave frequencies of the sounds which must be regenerated by a machine of this character and the wave tension called for by the sound conductibility of free air."

Substantially the same language is included in the patent in suit as issued (p. 2, line 79, Rec. p. 318).

In arguing against a rejection of the Patent Office, on page 9 of the amendment filed December 5, 1913 (Rec. p. 361) the applicant presented the following statement:

> "Applicant has practically demonstrated that, *to effect direct regeneration from the record of the sounds, a light, vibratile tympanum of substantially nine inches in diameter or greater* MUST *be employed* in order to obtain faithful reproduction."

Again on page 10 of the argument (Rec. p. 362) appears the following:

> "*The dimensions of the diaphragm and of the conical portion thereof*, as set forth in claims 15 to 20 inclusive, *are* ESSENTIAL *elements in a direct sound regenerator*, but they are not essential in sound boxes which employ horns or trumpets as do all of the references which have been cited against these claims. *This has been demonstrated by the applicant by actual trial.*"

The Patent Officer Examiner in his rejection of February 7, 1914 (Rec. p. 378) stated:

> "Claim 16 is rejected on the references and reasons of rejection of claim 14. The size of the diaphragm is held not a patentable limitation. Note, however, that Lumiere discloses a diaphragm exceeding nine inches in diameter."

Again, on March 4, 1916, the Examiner rejected the claims as being indefinite. He stated (Rec. p. 405):

> "The statement in some of the claims that the diameter exceeds nine inches is not believed to be sufficiently definite. If it is immaterial what the size is within a considerable range, then it is a mere question of expediency, or selection of any size one desires for any loudness, and would not involve invention."

In answer to this rejection, by an amendment filed March 28, 1916, Hopkins argued (Rec. p. 408):

> "*It is* ESSENTIAL *to the success of applicant's machine that the tympanum be of large area and that the base of the vibratile portion thereof exceed nine inches in diameter, and furthermore that the peripheral edge of the tympanum, exterior of the vibratile portion, be rigidly secured or tightly gripped between the rings of the supporting frame. These definitions of the* ESSENTIAL *characteristics of the invention have been included in the claims by the amendments aforesaid,* and said claims are, therefore, believed to be allowable."

From the foregoing, we see, therefore, that all of the claims of the Hopkins patent (except Claims 4 and 8) expressly require as an element, a vibratile sound-producing element (tympanum) *exceeding nine inches in diameter.* Throughout the prosecution of the case, this element has been characterized as an *essential* element to the Hopkins invention, and as *essential* to the successful operation of the Hopkins phonograph reproducer.

Referring to the undisputed dimensions of the Fada structures before this Court (Rec. p. 451), the dimension of the vibratile sound-producing member (b) is in one instance seven inches, and in the other, eight and one-half

inches, and hence, not within the Hopkins claimed monopoly.

3. All of the claims of the Hopkins patent likewise specify that the tympanum have "a conical *portion*." Obviously, this language describes the Hopkins structure wherein his tympanum of light vibratile sound-reproducing material is shaped from one piece of material so as to have a conical *portion* and a plane peripheral *portion*. In the Fada structures, only a frustrum of a cone is used. It has no plane peripheral *portion*. It has no conical *portion*. It has no *portions* at all. It is a single piece of uniform shape. To come within this language of the Hopkins claims it would be necessary, like Hopkins, to shape or deform a piece of vibratile sound-reproducing material, so as to form a peripheral *portion* and a conical *portion*. Petitioner's structures do not and cannot conform to this language. Therefore, while this language reads on and describes the Hopkins device, it does not read on and does not describe the Fada structures.

4. Claims 3, 6 and 7 of the patent have the added limitation that the altitude of the conical *portion* of the tympanum must be substantially one-quarter of the diameter of its base.

With respect to the added element, here again, no response is found in the Fada structures. Referring to Plaintiff's Exhibit 5 (Rec. p. 451), it will be seen (first with respect to the large speaker) that the altitude of the cone (the dimension *e*) is 4 inches. The diameter at its base (dimension *b*) is 8.5 inches. Therefore, the ratio is 4:8.5, or substantially $\frac{1}{2}$, *instead of substantially* $\frac{1}{4}$, as required by the claims. With respect to the small cone, the altitude (*e*) is 2.75 inches. The base of the small cone is 7 inches, giving the ratio 2.75:7, which, though not quite

½, is materially greater than the ¼ specified by the claims.

5. Claims 5, 6 and 7 specify, in one form or another, a support having a circular aperture exceeding nine inches in diameter. The metallic ring in the Fada structures (which is not a *support* for the tympanum) has an aperture (dimension *g*, Rec. p. 451) which is 8¼ inches in the large-size speaker and 6 25/32 inches in the small size speaker. Obviously, therefore, neither of the Fada speakers is within these claims.

6. Claims 4 and 8 do not *expressly* include the dimensional limitations contained in the other claims. It is for this reason that the argument was advanced in the Court below, in behalf of respondent, that these claims are not limited dimensionally. With this assertion we do not agree, even though, as has been pointed out, the claims are, in fact, limited in other respects to structural details not embodied in the Fada speakers.

We submit that Claims 4 and 8 are, in fact, limited to the minimum dimensions irrespective of whether or not those dimensions are numerically expressed in the claims.

The dimensional limitations, expressly appearing in the other claims of the patent, are not set out in the patent as optional. On the contrary, throughout the prosecution of the case, and in the patent itself, as has been hereinbefore pointed out, the dimensions have been set forth as *essentials* of the invention.

The Court of Appeals for the 2nd Circuit (16 Fed. [2] 7, p. 7) in the *Sylo* case stated (at p. 10):

> "The patentee points out that *it is essential to the success* that his device have a tympanum of a large area, and that the base of the vibratile portion thereof exceed nine inches in diameter, and further

that the periphery edge of the tympanum exterior of the vibratile portion be rigidly secured or tightly gripped between the rings of the supporting frame. These requirements of the essential characteristics of the invention were included in the claims. And the claims are thus limited. White *v.* Dunbar, 119 U. S. 47, Sargent *v.* Hall, 114 U. S. 63."

Again Judge HICKENLOOPER, in his unreported decision in the *Crosley* case, pointed out:

"*The form, shape size, material and proportions were all of the very essence of his invention.* The necessity of restricting the edge or base of the cone against deformity was not of the essence because it was old. The details of shape and dimensions pertain especially to the inventive step rather than to mere environment, were so considered by the patentee and so precisely claimed. *To the size, shape and proportions thus disclosed the patentee is limited by the prior art and the very essence of his invention.* (Cases cited.)

"That Hopkins himself so considered the nature of his invention is also disclosed by the contents of the file wrapper. Claims of ultra-broad scope having been repeatedly rejected on reference to Stroh, English, Brown, Kraemer, etc., in view of Lumiere and the Patent Office opinion that they were too indefinite and that 'the size of the diaphragm is held not a patentable limitation,' the applicant inserted into the claims all the specific and detailed limitations as to form and shape. In his response to official action of March 4, 1916, received in the Patent Office March 28, 1916 (File Wrapper, p. 86) he says:

'It is essential to the success of applicant's machine that the tympanum be of large area and that the base of the vibratile portion thereof exceed nine inches in diameter, and furthermore that the peripheral edge of the tympanum, exterior of the

vibratile portion, be rigidly secured or tightly gripped between the rings of the supporting frame. *'These definitions of the essential characteristics of the invention have been included in the claims by the amendments aforesaid, and said claims are, therefore, believed to be allowable.'* (Italics the Court's.)

"Not only is this a most emphatic statement by the patentee of what he considered to be the precise nature of his invention and the proper scope of his claims, bringing him clearly within the doctrine that that which is not claimed must be considered as abandoned and the scope of the claims limited to their plain intended purport, but coming as it did at the end of repeated rejections of the original claims on reference, it also brings the patentee within the estoppel by amendment, so clearly defined recently by the Supreme Court in I. T. S. Rubber Co. *v.* Essex Rubber Co., 272 U. S. 429, 443. And the patent in suit has been so restricted to the specific structure in the prior litigation thereon. (See Judge CAMPBELL in the Sylo case, 11 Fed [2] 422, and Judge THACHER in the Western Electric case, 20 Fed. [2] 150.)"

Again, Judge BOURQUIN in the *Rola* case (27 Fed. [2] 758), stated (at p. 760):

"To avoid rejection and to secure allowance of claims for a tympanum represented to be necessarily in excess of nine inches in minimum diameter, Hopkins represented, insisted and demonstrated the necessity, that therein was his discovery and invention, that it was of the essence and essential to success, was what enabled direct regeneration of sounds, must be employed, attains novel results, and was an essential characteristic of his invention.

> "Representations in these circumstances made to secure patents, narrow the grants, operate as disclaimers and limitations, and as such are to be given effect. Made then, they cannot be repudiated now. (Cases cited.)
>
> "*Hopkins taught that only tympanums exceeding nine inches would function*, in consequence of which all the field below that figure was left open to other experimenters, discoverers and inventors. *He made a particular size material.*"

To the same effect is the decision of the Court of Appeals for the 9th Circuit.

If, as the Hopkins patent represents, and as the various Courts have held, a tympanum in excess of 9 inches in diameter is the *essential* characteristic of the Hopkins invention,—is, in fact, the *essence* of the invention,—that dimensional limitation, of necessity, must be present in Claims 4 and 8, either expressly, or by implication.

As stated in *Walker on Patents*, Sixth Edition, Vol. 1, page 313:

> "Where the claim ascribes a function to any of the things which it specifies, that ascription is a limitation of that claim."

That has been the law since at least the date of the decision of this Court in *Consolidated Roller Mill Co.* v. *R. R. Walker*, 138 U. S. 133. Thus, where, as here, limitation in size has been advanced as the *essence* of the invention, any claims drawn to describe that invention must be considered as being limited thereto.

That is especially so in this case because in Claims 4 and 8 it is stated that the tympanum is "*of sufficient area*" to produce satisfactory sound waves, when vibrated. The patent states that this result can be secured *only* if a tympanum exceeding 9 inches in diameter is employed

(p. 2, line 79, Rec. p. 318). This language, therefore, imparts the 9-inch limitation to Claims 4 and 8 as expressly and explicitly as though numerical figures had been employed.

7. Irrespective of the dimensional limitations, Claim 4 includes as an element.

> "a light tympanum freely exposed to unconfined air."

Claim 8 contains the same limitation, expressed in slightly different language. Because of the fact that the vibratile sound producing elements of the Fada loud speakers are *not* exposed to "unconfined" air, it makes it necessary to ascertain what is meant by that expression.

Referring to the file wrapper of the original application, on page 1 thereof, it is stated (Rec. p. 327):

> "This invention relates to instruments which reproduce sounds, such as the talking machine and the phonograph, and is particularly directed to the attainment of a direct propagation *in free air from a record* of self-sustaining sound waves, as distinguished from an initial generation of violent air disturbances in a confined space, and a subsequent transformation of such disturbances into self-sustaining sound waves by means of the megaphone or trumpet, commonly employed with most existing machines." (The italicized words were added by amendment to distinguish from prior art.)

Substantially the same language appears in the patent as issued (p. 1, line 12, Rec. 317).

Page 2 of the specification as filed recited (Rec. p. 328):

> "It is an object of the present invention to regenerate the recorded sounds directly from the record, *without the interposition of a confined body*

> *of air* or (this word 'or' was changed by amendment to read 'and without') the employment of a restrictive transformer, such as a horn."

Substantially the same language is incorporated in the patent as issued (p. 1, line 67, Rec. p. 317).

Page 4 of the specification as originally filed (Rec. p. 330), at the end of the brief description of the figures of the drawings, starts at once to describe the enclosure for the cone as being a bottomless structure provided with apertures in all sides

> "which afford substantially uninterrupted air paths for the sound waves from the interior of the cabinet in all directions laterally to the surrounding atmosphere."

Substantially the same language is incorporated in the patent as issued (p. 2, line 11, etc., Rec. p. 318).

In the amendment filed December 5, 1913, the following statement was made (p. 6 of the amendment, Rec. p. 358):

> "With machines having sound boxes and horns, it is not material that the cabinet has apertures on all sides, as set forth in claim 1; nor whether it has no bottom as set forth in claim 2. On the other hand, *it is of great importance* that the cabinet, which contains a direct sound regenerating machine having a diaphragm which impresses its vibrations upon unconfined air, shall have an aperture leading to the surrounding atmosphere, as in claim 3; having no bottom, as in claim 2, or having apertures on all sides serving for free path for the sound waves from the compartment containing the regenerator to the surrounding atmosphere, as in claim 1. In machines having sound boxes and horns it is only required that the horn communicate with the outside atmosphere."

Again, on page 11 of the same amendment (Rec. p. 363), it is stated with respect to the structures of the prior art:

> "With reference to claim 28 rejected on Simon, Miller or Rosenthal, it will be noted, as was stated with reference to claims 1 to 3, that the references are all sound box machines which require horns to regenerate the sound waves, and in such structures it is not material whether or not the cabinet is bottomless and has apertures in all of its sides for affording free paths for sound waves to the surrounding atmosphere, as set forth in claim 28, *but it is of importance in a direct sound regenerating machine, for the success of such a machine is dependent upon the free vibration of a large diaphragm in unconfined air.*"

Thus, it will be seen that not only has Hopkins shown and described his device as being freely exposed to unconfined air, but, as pointed out in his specification, and in his presentation to the Patent Office, this is also an *essential* factor with his device.

The Court of Appeals for the 2nd Circuit in the *Western Electric* case (16 Fed. [2] 10), commenting on this limitation, stated (at p. 11) that Hopkins

> "says that when he referred to confined air, in his patent, he meant that there is an enclosure in which the air is being operated on is surrounded by walls and by limiting his invention to 'freely exposed to unconfined air,' he was distinguishing between sound box construction in which the air is confined, or partially confined against the rear side of the diaphragm."

The Fada loud speakers, as distinguished from being positioned so as to be freely exposed to unconfined air, are designed to be located in a cabinet, viz., either the

cabinet of the radio console, or in a separate loud speaker cabinet. The cabinet is specifically provided for a definite purpose. It serves as a resonance chamber and increases the mellow, tonal qualities of the reproduced sound (Rec. p. 53). In other words, *petitioner deliberately locates its vibratile tympanum in a resonance chamber of confined air* so as to secure decidedly beneficial effects. The Hopkins patent, on the contrary, specifies that his device must be *freely exposed to unconfined air*, and points out that detrimental effects will be obtained unless this is done. This again emphasizes the radical differences that exist between the Hopkins invention and the Fada loud speakers.

Summary and Conclusion on the Question of Infringement.

The foregoing discussion of this subject may be summarized in the following brief statements:

(1) The Fada structures do not employ what the patent points out is the *essence* or *essential characteristics* of the Hopkins invention

(2) The Fada structures do not employ *a tympanum rigidly supported at its periphery* (all of the claims).

(3) The Fada structures do not have a tympanum exceeding 9 inches in diameter (expressly in Claims 1, 2, 3, 5, 6 and 7, and inferentially in Claims 4 and 8).

(4) The Fada structures do not employ a tympanum formed in *portions*, one of which is a plane peripheral rim, and the other of which is conical (all of the claims).

(5) Hence, in the Fada structures, there is no dimensional proportion between the conical *portion* and the other portion (all of the claims, except Claim 8).

(6) The Fada structures do not have a cone, the altitude of which is substantially one-quarter of the diameter of its base (Claims 3, 6 and 7).

(7) The Fada structures do not have a support with a circular aperture exceeding nine inches in diameter (Claims 5, 6 and 7).

(8) The Fada structures do not have a tympanum of light vibratile sound reproducing material "of sufficient area" (specified in the patent specifically as 9 inches) to impart to the surrounding free air sound waves substantially corresponding in intensity to the original sound waves (Claims 4 and 8).

(9) The Fada structures are not used or designed to be used so that the tympanum is freely exposed on all sides to unconfined air (Claims 4 and 8).

It is submitted, therefore, that neither of the Fada structures infringes any claim of the Hopkins patent, irrespective of the validity thereof.

The Decision of the Third Circuit Court of Appeals On the Question of Infringement.

With lack of infringement of the Hopkins claims by the Fada structures so obvious, the question naturally arises,—what considerations influenced the Court of Appeals for the Third Circuit in rendering a decision which the District Court of Delaware in the present case regarded as precluding its independent judgment on the question?

In the Third Circuit case (*Lektophone* v. *Brandes*) there were two structures before the Court under the charge of infringement. This fact was apparently overlooked by the Court of Appeals in arriving at its conclusion because *only one form of structure is mentioned in its opinion.* The only structure which is referred to in the Court's opinion has an elongated or oval shaped cone member *exceeding 9 inches in diameter in one dimension.*

All that was said in the Court's opinion on the question of infringement was as follows (20 Fed. [2], at p. 155, at p. 157):

> "Briefly stated, we find infringement on the part of the defendant. While the form of Hopkins circular zone (evidently a misprint for "cone") is not precisely duplicated by defendant's elongated oval board, *yet in area and sound functioning it is appropriated and reproduced.*"

Thus, it will be seen that in rendering its opinion, the Court of Appeals quite obviously did not have in mind the second Brandes loud speaker that was before it under the charge of infringement. The second Brandes loud speaker was provided with a *circular* cone, *less than 9 inches in diameter.* It is our belief that it was because of this latter fact that the District Court of Delaware felt itself to be precluded from rendering its independent opinion on the question of infringement.

Quite obviously, the fact that there was before the Court of Appeals for the Third Circuit a speaker having a cone less than 9 inches in diameter, and hence not within the Hopkins claims, was not called to the attention of that court. If, contrary to our belief, this fact was called to its attention, the Court, in arriving at its conclusion, and certainly in writing its opinion, completely lost sight of the

second cone structure before it. In any event, the Court did not mention it in its opinion, and the statements made in its opinion could not accurately apply to the second Brandes loud speaker. If, by any interpretation, the opinion of the Court of Appeals for the Third Circuit can be construed as applying to both of the Brandes loud speakers, then the opinion is most obviously in error.

THIRD POINT.

The Hopkins Patent Is Invalid Because of Anticipation and Want of Invention.

It is believed to be unnecessary to go very deeply into this defense. The opinions of Judge HICKENLOOPER, Judge BOURQUIN and the Court of Appeals for the 9th Circuit cover this subject very fully and carefully.

Therefore, only a very brief review of the prior art of record will be made.

Maxwell Patent No. 216,051 (Rec. p. 473):

This patent shows a cone shaped vibratile diaphragm for sound reproduction. The diaphragm is made of "sheep-skin or other animal membrane" of "from seven to eight inches in diameter" stretched taut and used as a direct transmitter and/or receiver.

Dann & Lapp Patent No. 388,660 (Rec. p. 476):

This patent shows the use of a cone of light vibratile sound reproducing material. It will be noted that the cone is not only freely exposed to unconfined air, but is rigidly supported at its periphery, and is shaped out of one piece so as to form a conical portion and a plane peripheral portion.

Stroh British Pattent No. 3393 of 1901 (Rec. p. 480):

The device of this patent was used for a great many years in connection with violins for phonograph recording. One of the original Stroh violins is in evidence in this case and will be demonstrated to the Court. It employs a cone shaped diaphragm freely exposed to unconfined air and shaped out of a single piece of vibratile material so as to have a plane peripheral portion, as well as a conical portion.

Kraemer Patent No. 890,142 (Rec. p. 483):

Attention is called to the Kraemer patent principally because of the fact that a *frustrum* of a cone is employed as the light vibratile tympanum, as in the Fada structures, rather than a *cone* as specified in all of the claims of the Hopkins patent. The Kraemer patent was cited by the Patent Office against some of the claims of the Hopkins patent, and on page 9 of the amendment filed December 26, 1913 the following remarks were made by Hopkins (Rec. p. 361):

> "With respect to Claim 15, *there is no apex to the diaphragm of Kraemer, No. 890,142*, the plate 16, Fig. 3, being secured to the flat central portion of the diaphragm, *which is not a cone as in applicant's construction, but is a frustrum of a cone with a flat top*, which is considerably larger than the metal plate 16. With a diaphragm of this kind, the center will yield and produce local disturbances. *Furthermore the connoidal portion of the Kraemer device, not terminating in an apex, and the plate 16 not reaching to the connoidal portion, the connoidal portion will not be moved bodily* to the same extent as would be the case if the metal plate were secured to an apex as in applicant's construction."

Lumiere Patents Nos. 986,477 and 1,036,529 (Rec. pp. 486 and 497):

The structures of these patents, it will be noted, are for the identical purpose as that of the Hopkins patent, namely, as a sound reproducing device for phonographs. It will be noted that the paper diaphragm is mounted so as to be freely exposed to unconfined air. It will likewise be noted that Claim 21 of patent No. 1,036,529 refers to the diaphragm as a double *cone* (Rec. p. 507, line 50). The diaphragms of the Lumiere devices were larger in diameter than 9 inches, and about 48,000 of the Lumiere devices were sold by the Victor Company (Rec. p. 85).

English Patents Nos. 1,064,062 and 1,192,289 (Rec. pp. 509 and 515):

These patents show a cone shaped diaphragm made of paper and used as a sound reproducing device.

Elfering Patent No 1,182,078 (Rec. p. 520):

This patent shows a cone shaped out of one piece of vibratile sound reproducing material so as to have a cone portion and a plane peripheral portion.

Brown British Patents Nos. 29,833 of 1910 and 1,157 of 1911 (Rec. pp. 523 and 528):

These patents show a cone made of light vibratile sound reproducing material shaped out of one piece of material to form a cone portion and a plane peripheral portion.

Article by Starling & Cole in "The Talking Machine News" of July, 1907 (Rec. p. 541):

This article shows and describes in considerable detail a paper cone used as a sound reproducing device on a phonograph. The diameter of the paper cone is given as 8 inches.

Watts & Maxwell Patent No. 237,712 (Rec. p. 547):

Here, the sound reproducing device is shown as a cone shaped out of "sheep-skin, for instance" (p. 1 of the patent, line 71, Rec. p. 548) so as to form a cone portion and a plane peripheral portion.

The Limitation of Size.

A good many of the patents hereinabove briefly reviewed, show cone structures of sizes less than 9 inches in diameter. This, of course, is not true with respect to the Lumiere structures which employ a diaphragm in excess of 9 inches in diameter. The Starling and Cole cone employs a cone 8 inches in diameter. As compared to the Fada structures (Rec. 451) the diameter of the large size Fada speaker is ½ inch larger than that of Starling and Cole, and the diameter of the small Fada speaker is 1 inch *smaller* than the Starling and Cole cone. It may be of interest, therefore, to ascertain from the mouth of Hopkins himself why the 9 inch limitation was inserted in the claims of his patent and asserted in the patent specification as the *essential* feature of his invention. Mr. Hopkins (who, incidently, was a patent attorney of fourteen years' experience at the time his application was filed, XQs37-41, Rec. p. 223) was cross examined on that point beginning at XQ121 (Rec. p. 239) and we call particular attention to XQ136 (Rec. p. 243) where his previous testimony in the *Western Electric* case was read to him and he adopted it, with slight modification, in the present case. Particularly significant is his language (Rec. p. 244):

> "Now, we had to arrive at something in that dark age and we did not have very much encouragement from either the Patent Office or anybody else, and it was a mighty difficult proposition *and the reason*

for choosing that size was that we were made to choose it. We did not want to choose it, we were made to choose it by people hollering about a whole lot of little diaphragms that were previously used and did not do this thing.

"Now, we were caused to choose the minimum size. Where there are little diaphragms, which are one thing, and big diaqhragms, which are other things, there must be a line of demarcation drawn and we had to draw it, and when we drew it we made that size. We may have cheated ourselves or we may have taken more than was our due."

Finally, on the matter of size of the tympanum, we call attention to the cross examination of the patentee Hopkins beginning at RXQ321 to the end of his testimony—RXQ335, Rec. page 282). From this it was seen that there is no critical size for the cone until *17 inches in diameter* is reached. In other words, the only difference between a small cone (one inch or more in diameter) and a larger cone up to 17 inches in diameter, is one of size, or, legally speaking, degree. A 2 inch cone is better than a 1 inch cone; a 3 inch cone is better than a 2 inch cone; a 17 inch cone is better than a 16 inch cone. Therefore, it is apparent that Hopkins, in going to the Patent Office and representing that he had made an invention of critical dimension, perpetrated a fraud upon the Patent Office and upon the public. Thus, wholly apart from the proposition that having limited his patent specification and claims to dimensional features, he has limited his monopoly thereto, the patent is wholly invalid because of his fraudulent misrepresentation as to the *essence* of his invention. In any event, the invention is wholly wanting in patentable novelty, because it differs from the prior art, if at all, only in dimension.

As stated by Judge BOURQUIN in the *Rola* case (27 Fed. [2] 758, at p. 761):

> "Brown (referring to Brown's British patent 29,833, Rec. p. 523) had taught, if the obvious needs teaching, that increase in size would increase volume or loudness."

The Decision of the Third Circuit Court of Appeals On the Question of Validity.

It might be well to point out that the Third Circuit Court of Appeals did not have before it the testimony of Hopkins, given under cross examination beginning at RXQ321, Rec. page 282, above referred to. It is probable that the same conclusion would not have been reached by the court had such testimony been available to it.

Let us see, however, what considerations influenced the Court of Appeals to reverse the decree of the New Jersey District Court that the patent was invalid, and find validity therefor.

We believe that we will convince this Court that the Third Circuit Court of Appeals was led into four fundamental errors of fact on which it predicated its decision. These errors are as follows:

1. The Court was under the impression that Hopkins was the first to point out that "blasting" in vibratile diaphragm sound reproducing devices could be prevented by rigidly clamping the peripheral edge of the vibratile element.

2. The Court stated that the prior Lumiere device shown in the prior Lumiere patents (Rec. pp. 486, 497), though adopted by a large commercial concern, namely, the Victor Talking Machine Company, never passed into approving public use.

3. The Court was influenced by the noted fact that the Victor Company, which owned the Lumiere patents, was using a loud speaker device manufactured by the General Electric Company under license from the Lektophone Corporation under the Hopkins patent in suit.

4. The Court was of the opinion that the cone portion of the Hopkins tympanum moved *bodily*, on a new principle of operation, and in this respect it differed from the cone sound reproducing devices of the prior art.

It is our belief that the Third Circuit Court of Appeals predicated its conclusion of validity on the foregoing facts, and we will now point out the error of the Court with respect to each thereof.

1. Blasting.

The opinion of the Court of Appeals for the Third Circuit, on the subject of blasting, recites (20 Fed. [2] 155, at p. 156):

> "As we understand the action of the cone in free air, waves of different frequency are shed or emitted from the cone at various zones; *that is to say, all the high frequency waves pass off into the open air near the apex of the cone, and as the waves become of lower frequency they will not pass off except from the farther out edges of the cone.*"

In other words, the Court was led to believe that in the Hopkins loud speaker device, the notes of high pitch emanate only from or near the apex of the cone, and the notes of low pitch emanate only from the peripheral edge of the cone. This understanding, necessary to the Court's conclusion of validity of the Hopkins patent, is scientifi-

cally erroneous (Q208, Rec. p. 99). As is visibly demonstrated by sand patterns of the vibratile member of both Lektophone loud speakers and Fada loud speakers, it is apparent that all frequencies, *i. e.*, all tones emanate from *all* portions of the vibratile material throughout its area (Rec. p. 557; see also Petitioner's physical exhibits).

The opinion of the Third Circuit Court of Appeals continues:

> "In order, therefore, to send out these waves of low frequency the volume of sound must be increased, with the result that as these low frequency waves are emitted near the outer edges of the cone its edges begin to weave or flutter, and set up an independent motion of their own. This is termed blasting and is highly objectionable. *Now it seems to us that Hopkins was the first to point out that this blasting effect caused by the local vibrations at the edge of the cone would be prevented* and the cone held restricted to vibrations as a whole and the weaving prevented by the expedient of using a rigid frame and making a liaison between the edges of the cone and the clamp of the rigid frame by a flexible yielding liaison belt which vented and thereby prevented the obnoxious fluttering of a cone's edges not rigidly held."

In this the Court of Appeals was also misinformed. The phenomenon of "blasting," *i. e.*, fluttering, or weaving of the peripheral edge of the cone, is something that is *not mentioned or even remotely suggested in the file history of the Hopkins patent or in the patent itself.* Furthermore, it is something that was not mentioned or remotely suggested by or in behalf of Hopkins or the Hopkins patents in the testimony of both the *Sylo* and *Western Electric* suits (Hopkins XQ105-XQ109, Rec. pp. 233-238). The "blasting" phenomenon was merely the ingenious "inven-

tion" of counsel for Hopkins, made long after the Hopkins patent issued, *and after two trials had been had in litigations involving the patents.*

While the "blasting" phenomenon is not mentioned or suggested by the Hopkins patents and their file histories, it is fully described and cured in many instances of the prior art.

For example, as stated by Judge HICKENLOOPER in the *Crosley* case:

> "Even if the Hopkins patent can be read as teaching that the base of the cone must be restrained against weaving, fluttering or forming loops and nodes, in order to produce a satisfactory result, *Hopkins was not the first to so teach.* This teaching is clearly disclosed by Stroh (British Patent 3392—1901) and the practice of so restraining the base of the conical portion of the diaphragm was employed and the subject of patent publication by English, Brown and others, including Lumiere, without detailed reference to the function of such annulus or plane rim. *We cannot concur in the apparent opinion of the Court of Appeals of the Third Circuit (Brandes case) that 'Hopkins was the first to point out that this blasting effect, caused by local vibrations at the edge of the cone, would be prevented and the cone restricted to vibrations as a whole, and weaving prevented by the expedient of using a rigid frame and making the liaison between the edges of the cone and the clamp of the rigid frame by a flexible yielding liaison belt'. Stroh specifically taught this but not Hopkins."*

We will not quote from the patents referred to by Judge HICKENLOOPER in his opinion. Verification of the accuracy of Judge HICKENLOOPER's statements, however, may be readily obtained upon reference to the patents as reproduced in this record. (See for example, Stroh patent,

lines 20-31, Rec. p. 480; Lumiere patent, lines 58-76, Rec. p. 491.)

Thus, it will be seen that the Third Circuit Court of Appeals based its conclusion of validity for the Hopkins patent on an erroneous premise.

2. Lumiere Reproducer Not Commercial.

On the question of the value of the Lumiere disclosure as an anticipation of the Hopkins patent, the Court apparently ignored the legal effect of the publication of the disclosure of the Lumiere patents, because it was erroneously led to believe that the Lumiere patents were mere "paper" patents, and the structure shown and described therein was of no commercial utility. On this subject, the Court of Appeals for the Third Circuit said in its opinion (at p. 156):

> "Such being Hopkins' disclosure, we next turn to the basic question on which the Court below decided the case, namely, whether Hopkins' disclosure was anticipated by Lumiere in his patents Nos. 986,477 and 1,036,529 of 1912. *It is a significant fact that although Lumiere's device was adapted* (adopted) *by such a strong company as the Victor, it has never passed into approving public use*, and that company itself is using a cone which the General Electric Company makes as licensee under Hopkins' patent."

Here, again, the Court was in error as to the facts, probably due to the insufficiencies of the record before it. It has been proven in the record of this case by the deposition of Edward K. MacEwan, Secretary of the Victor Talking Machine Company (Rec. pp. 75 *et seq.* and 84 *et seq.*) that the Lumiere device was adopted in 1908 or 1909 (Rec.

p. 75); was still being manufactured for use as a loud speaker for a radio receiving set in 1925 (Rec. p. 79); and up to 1926, when the manufacture of the Lumiere device was discontinued, *about 48,000 Lumiere devices had been sold to the public* (Rec. p. 85). Irrespective of what evidence was before the Court of Appeals for the Third Circuit on which to predicate its opinion above quoted, the real facts are established by incontrovertible testimony in the present case, as above set forth. These facts establish the absolute erroneousness of the premise on which the Court's opinion was based.

3. Victor Company Using Loud Speakers Licensed Under the Hopkins Patent.

In the above quoted portion of the opinion of the Third Circuit Court of Appeals, it will be noted that it is stressed that the Victor Company is using a cone manufactured by the General Electric Company, licensed under the Hopkins patent. The true facts with respect thereto are established in this record, for the first time we believe, through the testimony of Mr. MacEwan, (Rec. p. 84), and the testimony of Selden T. Williams, formerly Production Engineer, Chief Engineer, General Superintendent, and Works Manager of the Victor Talking Machine Company (Rec. p. 86). The fact that the General Electric Company was licensed under the Hopkins patent was something with which the Victor Company was not concerned in contracting with the General Electric Company to supply the Victor Company with the apparatus it required (Rec. p. 91). The *controlling* factor was that the Victor Company was not manufacturing electrical instrumentalities (Rec. p. 88). The loud speakers acquired by the Victor Company from the General Electric Company included a complete

electrical amplifying assembly, the total cost of which was many times the cost of the cone sound reproducer. The cone sound reproducing element was only one part of an enormous electro-mechanical assembly. Indeed, it was the smallest, most insignificant and inexpensive part of the entire assembly. Furthermore, all of the mechanical parts of the electro-mechanical assembly had to be very accurately and scientifically balanced (Rec. p. 90). The pamphlets of the Victor Company, showing and describing the complete electro-mechanical instrumentalities, are reproduced in this record at pages 513 and 514. The actual physical apparatus, schematically depicted in these bulletins, will be shown to the Court at the argument of the cause.

It is quite apparent that the Victor Talking Machine Company, not equipped to manufacture complicated, expensive, electrical apparatus, and with no experience in the manufacture thereof, most logically contracted with the General Electric Company, who not only had many years' experience in the manufacture of such instrumentalities, but was equipped to supply the Victor Company with such complicated mechanism in the desired quantities. As above stated, these conditions were the controlling considerations, and the Victor Company was not concerned with the most insignificant, inexpensive item of the assembly, viz: the cone loud speaker. These established facts, we submit, take completely away from the case the inference raised by the language of the Third Circuit Court of Appeals with respect thereto, and conclusively show that the record in this case precludes any such inference.

It will likewise be noticed that the Court of Appeals followed the above quoted portion of its opinion with the statement:

> "But apart from Lumiere's patents having attained no position in the practical art, *it is quite clear that he had no conception of that which constituted the gist of Hopkins' invention.*"

As noted above, in a previously quoted portion of its opinion, the *gist* of the Hopkins invention was stated by the Court to be that *Hopkins was the first to point out the blasting effect and its cure.* Here, again, the Court was in error. Lumiere patent 986,477 (Rec. p. 490) says (Rec. p. 491, p. 1 of the patent, line 58 *et seq.*):

> "The invention consists in a diaphragm for acoustical instruments, having one or more freely resilient, sound responsive surfaces or elements, which have been brought into a condition of molecular stress, *of an aggregate superficial area substantially larger than the surface of a plane disk of the same diameter,* and in a recorder or reproducer in which said diaphragm is mounted.
>
> "It is found that the effect of bringing the surfaces of a vibrating body into a condition of molecular stress by torsion, is to reduce to a minimum the tendency of the vibrating body to form nodes during operation, *so that the surface or surfaces of the diaphragm will vibrate as a whole and will not produce the disagreeable effect which is technically known as blasting or shattering.*"

Thus, it is seen that this premise of fact, on which the opinion of the Court of Appeals for the Third Circuit was based, is shown to be absolutely erroneous by the present record.

4. The Bodily Movement of the Hopkins Cone.

We have shown, hereinabove, that the Court of Appeals for the Third Circuit was of the opinion that the Hopkins

cone moved *bodily*, or like a plunger, as Hopkins testified (XQ105, Rec. p. 233), in order to regenerate sound waves, as distinguished from the prior art where wave vibrations throughout the surface of the cone effected the regeneration of the sound waves. This conclusion was based on the statement in the Hopkins patent in suit (Rec. p. 318, line 112):

> "The conical shape is given the tympanum so that shocks or vibrations impressed upon the apex of the cone in a direction towards its base *will move the cone bodily*, the strains being imparted edgewise of the material and no wave motions being set up in the thin material of the cone. The curvature of the walls of the cone *precludes the setting up of waves in the material;* and the intended object, *a simultaneous movement of the whole conical portion of the tympanum*, is thus attained."

The Hopkins patent and the Court of Appeals for the Third Circuit, must be either right or wrong in this theory of operation, which was accepted by the Patent Office as distinguishing the Hopkins speaker from the prior art. If Hopkins and the Court of Appeals are right, then the Fada structures cannot infringe, because, as was visibly established during the trial of the case, and as is established by the sand patterns* which will be shown this Court, *the cone frustrums of the Fada loud speakers do not move bodily, but vibrate throughout their entire area to regenerate sound waves.* If, on the other hand, Hopkins and the Court of Appeals are wrong on the theory of operation of the device, (and it is our belief that they are), then the theory which differentiated Hopkins from the

* Defendant's Exhibits 31 to 37 showing the effects produced in the Fada paper diaphragm in the production of notes varying from 120 cycles to 6,400 cycles per second (*i.e.*, usual sound frequencies).

prior art, and secured the issuance of his patent, is fallacious, and the patent is invalid; with the result that one of the major factors on which the Court of Appeals predicated its decree of validity of the patent is fallacious, and the opinion of the Court of Appeals in error.

From the foregoing, we submit that the opinion of the Court of Appeals for the Third Circuit, sustaining the Hopkins patent as valid, is entitled to little consideration in the present case because, as we have established, it was based on errors of facts, misunderstanding, or lack of understanding thereof which may have been justified by the record before it, but for which there can now be no justification in view of the record in the present case.

CONCLUSION.

We therefore submit:

(1) The Hopkins patent is invalid

(a) Because of violation of the provisions of Section 4897 of the Revised Statute.

(b) Because of anticipation by and want of patentable invention over the prior art.

(2) The Hopkins patent, if valid, is not infringed by either of the Fada structures.

It is therefore urged that this Court direct the Circuit Court of Appeals for the 3rd Circuit to reverse the judgment of the District Court for the District of Delaware.

Respectfully submitted,

SAMUEL E. DARBY, JR.,
Attorney for Petitioner.

Dated, New York, N. Y.,
September 29, 1930.

FILE COPY

Office Supreme Court, U. S.
FILED
NOV 5 1930
CHARLES ELMORE CROPLEY
CLERK

SUPREME COURT OF THE UNITED STATES

OCTOBER TERM, 1930

No. 68

MILLER BROTHERS COMPANY
Petitioner

v.

LEKTOPHONE CORPORATION
Respondent

REPLY BRIEF OF PETITIONER

SAMUEL E. DARBY, JR.
Counsel for Petitioner

APPEAL PRINTING CO., 22 THAMES ST., NEW YORK CITY

Supreme Court of the United States

OCTOBER TERM, 1930.

MILLER BROTHERS COMPANY, *Petitioner,* v. LEKTOPHONE CORPORATION, *Respondent.*	No. 68

REPLY BRIEF OF PETITIONER.

It is believed to be necessary to present this reply to Respondent's brief because, rather than meet and clarify the issues raised by the Petitioner's brief, Respondent has, apparently, chosen to avoid and becloud them. Effort will be made, however, to discuss only the points not fully covered by our main brief.

The Hopkins Invention.

Respondent, relying upon its discussion and argument on the subject in its brief in the *Rolla* case, asserts (Brief, pp. 4 and 5) that the Hopkins invention is a three element mechanical combination comprising—

(1) "a large, light, stiff, paper cone coupled by an"

(2) "annular, plane peripheral rim to"

(3) "a rigid, encircling frame."

The assertion is made that this three element combination results "in a practical direct acting loud speaker having a *new* mode of operation and a *new* result"* (Respondent's brief, p. 5). The assertion is also made (Respondent's brief, p. 5) "that the invention lay in the *new combination*, not in the selection of the rim material." Counsel for the Lektophone Company quite frankly admitted in open Court in the Court below, and will no doubt make the same frank admission before this Court, that *the same combination of the same three elements* is found in the prior art.

It is, of course, unnecessary to rely upon admissions heretofore made by counsel in argument, or upon an expectation of a repetition thereof before this Court. We have merely to refer to the structures of the prior art to completely prove the fact. It is, of course, immaterial whether the cone sound reproducers of the prior art are made of *paper* or some other light, vibratile material. This is so because the claims of the patent are silent as to the material to be employed for the tympanum. On page 2 of the patent (Rec. p. 318, line 74) the tympanum is described as being of "light, vibratile material." On page 3 of the patent (Rec. p. 319, line 10) the material is described as "compressed fibrous material, such as hot pressed paper or *fibre*." At line 7, page 2 of the patent, the material of the tympanum is stated to preferably be a "colloidal" substance.† In the parent application as originally filed, the material of the tympanum was described in the following language (Rec. pp. 344-345):

> "Compressed fibrous material, such as hot pressed paper or fibre, has been found to act satisfactorily,

* Italics in this brief are ours.
† Celluloid, for example, is a colloidal substance.

> *but I* ***prefer*** *hard rubber or vulcanite* as it is more easily handled, is less affected by weather conditions and lends itself to the production of a more finished product."†

From the foregoing it will be readily seen that the alleged invention of the patent, as well as the claims thereof, are not concerned with the *material* of the tympanum.

With this established, we point out the numerous instances of the prior art where the so-called "three element mechanical combination" of Hopkins is illustrated and fully described in a sound reproducing device.

(A) The Dann and Lapp patent No. 338,660 of 1886 (Rec. p. 476) shows the light vibratile tympanum comprising (1) the cone *a* coupled by (2) an annular, plane peripheral rim A, to (3) a rigid, encircling frame *m*.

(B) The Stroh British patent No. 3393 of 1901 (Rec. p. 482) shows the same three element combination, viz.: (1) the vibratile sound reproducer cone (*a* of Fig. 1, a^1 of Fig. 2, a^2 of Fig. 3), each coupled by (2) an annular plane peripheral rim to (3) a rigid encircling frame.

(C) Kraemer patent No. 890,142 of 1908 (Rec. p. 483) also shows the identical three element combination consisting of (1) the vibratile cone (15), having (2) an annular peripheral rim coupled to (3) a rigid encircling frame.

(D) English patents No. 1,064,062 of 1913 and No. 1,192,289 of 1916 (Rec. pp. 509 and 515), each illustrate the identical three element mechanical combination consisting of (1) a vibratile cone coupled by (2) an annular plane peripheral rim to (3) a rigid encircling frame.

---

† See Record pp. 222-226, beginning at quoted XQ35.

(E) Elfering patent No. 1,182,078 of 1916 (Rec. p. 520), shows (1) the cone with its (2) annular plane peripheral rim. While this patent does not show the encircling rigid frame, it points out (p. 1, line 100):

> "It is well known that in diaphragms wherein *the margin is engaged in a sound box,* and the intermediate portion is free to vibrate to reproduce sound, the central portion which is connected with the stylus bar is afforded the maximum vibration, while the surface intermediate of the central portion and the periphery vibrates with varying force diminishing toward *the margin of the diaphragm which is engaged.*"

(F) Brown British patents No. 29,833 of 1910 (Rec. p. 527) and No. 1157 of 1911, each show the same three element mechanical combination, comprising (1) a vibratile cone coupled by (2) an annular plane peripheral rim to (3) a rigid encircling frame.

(G) Maxwell patent No. 216,051 of 1879 (Rec. p. 473), also shows the three element mechanical combination consisting of (1) the vibratile cone B, coupled by (2) an annular peripheral rim, to (3) a rigid encircling frame A (in this instance the rim is tacked, riveted, or otherwise permanently affixed to the frame).

(H) Watts and Maxwell patent No. 237,712 of 1881 (Rec. p. 543), shows the same combination wherein (1) the vibratile cone B is coupled by means of (2) an annular plane peripheral rim to (3) a rigid encircling frame by means of tacks or the like g.

From the foregoing it will be quite apparent that if, as Respondent's counsel assets (brief p. 5) Hopkins' invention "lay in the new combination" of the three elements,

then the patent is completely anticipated and is entirely devoid of novelty because the *same* three elements, used in the *same* combination, each performing its *same* respective function in the *same* way, is found in every instance of the prior art to which attention has been called. Nor can this conclusion be escaped by counsel's mere unsupported assertion that the Hopkins three element combination resulted in a loud speaker "having a *new* mode of operation and a *new* result." What, it is queried, is the *new* mode of operation? What, it is queried, is the *new* result? The mode of operation of the Hopkins phonograph reproducer is that vibrations caused by the needle traveling in the groove of a phonograph record are imparted to the apex of the cone. These vibrations, in turn, cause the cone to vibrate, thereby setting up sound waves (See Respondent's brief in *Rola* case, p. 14). Identically the same action *unavoidably* takes place in every instance of the same combination in the art above set forth. Not only is it obvious that the mode of operation is identical, and of necessity must be, but it is equally obvious that the *results* are identical. The vibration of the conical diaphragm of Hopkins sets up audible air waves. The identical three element combination of the prior art unavoidably does the same thing. Sound waves are sound waves irrespective of whether they are regenerated by Hopkins or by Dann and Lapp, English, Brown, Stroh, etc.

With these facts so apparent on a moment's consideration, what, it is again queried, is left for Hopkins to claim as an invention? We submit that the answer is—*nothing*. The only *physical* difference between what Hopkins has claimed and what is shown in the art, in so far as we are here concerned, is the *size* of his vibratile tympanum. Variation in size, however, does not, as erroneously urged by Respondent's counsel, effect a different *mode of opera-*

tion or a different *result*. A difference in *degree* of result (for example, as in volume or range) is no basis for the unqualified assertion that has been made in counsel's brief in behalf of Respondent.

Thus, the only difference that exists between Hopkins and the identical structures of the prior art is in the *size* of his tympanum. This fact was recognized by the Patent Office, as evidenced by the file history of the case, and the persistent rejection of the claims. It was likewise recognized by Hopkins in the prosecution of his application, in the patent as issued, and in his testimony when he appeared as a witness in litigation brought on his patent (see our main brief, p. 38). Indeed, as is made clear by the patent and its file history (and so held by the Courts in the Sixth and Ninth Circuits), the *minimum size* of the vibratile tympanum was made the *essence* of the invention. Obviously, there was no patentable *novelty* in an increased *size* of device, where the three element combination remained identical in structure, function and operation. This is especially so in view of the Lumiere patents (Rec. pp. 486, 497), where tympanums well above the minimum size specified by the Hopkins patent are disclosed with the same plane annular rim rigidly fastened to an encircling supporting frame. The Fada structures, being smaller than the minimum size of the Hopkins patent, quite obviously, do not infringe the patent even if, by any interpretation, validity can be found therefor.

Section 4897 R. S.

(Respondent's brief, pp. 7-17.)

We have little to add to what we have said in our main brief on this subject. We desire, however, to point out that only one case of those cited by the District Court

in support of its conclusion (as opposed to Petitioner's contention) had to do in any respect with the provisions of Section 4897 R. S. In that one case (*Diamond etc. Co.* v. *The Bayer Co.*, 13 Fed. [2] 337) the patent, the validity of which was attacked, was sustained by the Court expressly because *the renewal of the forfeited application was filed within the two years provided by the statute.* Neither the Court below nor Respondent has cited any instance where a renewed application, filed *after* the expiration of the statutory period of Section 4897 R. S., has been held to be valid.

The controlling facts of the case at bar, which differentiate the present case from all those cited by Respondent and the Court below, are:

(1) Claims directed to the subject-matter of the patent in suit were allowed in the parent application.

(2) The application was forfeited for non-payment of the required fee.

(3) *Before* the expiration of the statutory period of Section 4897 R. S. the *first renewal* application was filed.

(4) *Before* the expiration of the statutory period *the claims directed to the subject-matter of the patent in suit were* ***voluntarily canceled.***

(5) **After** the expiration of the statutory period provided by Section 4897 R. S. *the application for the patent in suit was filed. This constituted the* ***second*** *renewal.*

The case of *Dwight & Lloyd* v. *Greenowalt*, 27 Fed. (2) 823, was cited by Petitioner to show an express holding that with respect to Section 4897 R. S. the filing of a divisional application in and of itself constitutes a "*renewed*" application, under the statute, for the subject-matter of the divisional application.

There can be no doubt but that the filing of the divisional application for the patent in suit, *at a time when there was no claim directed to that subject-matter pending before the Patent Office*, constituted a *renewal* of the application. In fact, it was the *second* renewal. In law, it was barred by statute.

In a footnote on page 9 of Respondent's brief, comment is made to the effect that Hopkins' procedure of voluntarily dividing out the subject-matter of the patent in suit from his parent application, was not adopted with any ulterior purpose. This is wholly inconsistent with the argument that is advanced on pages 36 and 37 of Respondent's brief, where it is *pointed out* that although the parent application, as filed and issued, was expressly limited by the language of its specification to the *phonograph art* (to which the file history and language of the claims properly limited the alleged invention), the patent in suit has been *intentionally* expanded beyond Hopkins' original invention so as to include reproduction of sounds, not only from phonograph records, *but from "other element subjected to the action of such sounds," as well.*

On Criticisms of Petitioner's Brief.

(Respondent's brief, pp. 17-24.)

1. The Annular Rim (Respondent's brief, pp. 17-21).

The difference in the annular rim of the Fada loud speakers and that of the Hopkins patent is, we submit, of considerable importance in this controversy. That is so for these reasons:

(a) The claims of the Hopkins patent assert that it is the *tympanum* which must exceed 9 inches in diameter.

and which must be clamped at its periphery to the annular rim. The specification of the patent makes it perfectly clear that it is the *tympanum* that must be made of "light, vibratile material" capable of regenerating sounds. The light vibratile material capable of regenerating sounds, in the Fada structures, is *less* than 9 inches in diameter, and is *not* rigidly clamped at its periphery. Of course, Respondent's whole hope of success in this litigation is dependent upon its ability to have this Court consider this a "trifling point." It is believed that the Court will not be disposed to pass by, as lightly as counsel for Respondent does for want of a convincing answer, a dispositive fact in the litigation.

The vibratile rim of the Hopkins patent actually *does* give off sound waves. The Court of Appeals for the Second Circuit called it (in the *Sylo* case) a "sounding rim." It is truly—as correctly described in the patent—*part of the tympanum.* Not only does the cloth rim of the Fada structures *fail* to give off audible sound waves, it actually *absorbs* the sound waves (Rec. pp. 42-43), which is, of course, the direct antithesis.

2. The Support (Respondent's brief, p. 21).

Under this heading counsel for respondent quite obviously avoids the issue, and engages in a play on words. Inspection of the Hopkins patent discloses that the *entire* and *only* support afforded the tympanum is by the rim. If the rim were removed the tympanum would fall. It is in that sense, and only that sense, that the terms "support," "supported," and "supporting" are used in the Hopkins specification and claims.

In the Fada loud speakers, the cloth rim can be taken away and the vibratile element does not fall. It retains its position and is still operative and useful.

These are simple facts that can and will be demonstrated to the Court by the simple expedient of removing the cloth rim and operating the loud speaker with its rim removed. Of course the cloth rim of the Fada structures would retain the cone in position and prevent sagging due to gravity, should its weight be excessive (which, in fact, it never is), but that is not what is meant by "support" in the Hopkins specification and claims. As above stated, the rim is the *only* support for the Hopkins cone which prevents it from flying to the four winds.

Bodily Movement of the Hopkins Cone (Respondent's brief, p. 33).

Under this heading (Respondent's brief, p. 33) again the issue is avoided, and attempt made to becloud it. Counsel for Respondent develops, what has never been denied, that all vibratile conical sound regenerators vibrate bodily as well as with wave motions. It is, however, the wave motion which is the source of sound. The Court of Appeals for the Third Circuit stated that the Hopkins cone moved bodily *without wave movement.* This assertion was based on the statement contained in the Hopkins patent, as follows (p. 2, line 112, Rec. p. 38):

> "The conical shape is given the tympanum so that shocks or vibrations impressed upon the apex of the cone in a direction towards its base will move the whole cone bodily, the strains being imparted edgewise of the material *and no wave motions being set up in the thin material of the cone.* The curvature of the walls of the cone *precludes the setting up of waves in the material;* and the intended object, the simultaneous movement of the whole conical portion of the tympanum, is thus obtained."

Petitioner has never contended that a cone does not move *bodily* AS WELL AS in waves. The Court of Appeals for the Third Circuit, however, based its opinion on the understanding, as expressly stated in the Hopkins patent, that the cone of Hopkins' invention moved bodily *without* wave movement. Indeed, the Court was under the impression that the function of the rigid frame was, as stated by the patent, to *prevent* wave movement. This understanding of the mode of operation of the Hopkins device (erroneous in scientific fact though it was) was necessary to the Court of Appeals' finding of *novelty* or *invention* for the Hopkins patent. In either case, the record in this litigation conclusively establishes (see, for example, the sand patterns) that the Fada structures do not operate with bodily movement *without wave movement*, but, on the contrary, depend upon the wave movement for the regeneration of sound. The conclusion to be drawn from these facts is believed to be obvious. The Court of Appeals for the Third Circuit found patentable novelty for the Hopkins three-element mechanical combination, because it believed that the Hopkins combination operated in a manner which was different from the operation of the same three-element combinations of the prior art. Whether the Court of Appeals was right or wrong, for the moment, is immaterial, for the result is the same. If the Court of Appeals was wrong (and it is our conviction it was), and there is, in fact, no difference in mode of operation between the Hopkins device and the similar devices of the prior art, the Hopkins patent is invalid for want of patentable novelty. If, on the other hand, the Court of Appeals was right, and the Hopkins device does operate in a manner different from that of the same devices of the prior art, then the Fada structures do not infringe because the Fada structures

operate on the same principles and in the same way as the devices of the prior art. Counsel for Respondent carefully avoided meeting that issue.

The Limitation as to Size (Respondent's brief, pp. 42, *et seq.*).

We need not again traverse the ground covered in our main brief under the heading of infringement. Counsel for Respondent, in his endeavor to avoid the express limitation in the claims of the Hopkins patent as to the 9-inch limitation in size, is merely arguing against the disclosure, language, and file history of the patent in suit.

CONCLUSION.

The Court below should be reversed.

Respectfully submitted,

SAMUEL E. DARBY, JR.,
Counsel for Petitioner.

October 28, 1930.

FILE COPY

APR 18 1930
CHARLES ELMORE CROPLEY

IN THE

Supreme Court of the United States

OCTOBER TERM, 1929.

No. ~~772~~ 68

MILLER BROTHERS COMPANY,
Petitioner,

against

LEKTOPHONE CORPORATION,
Respondent.

RESPONDENT'S BRIEF ON PETITION FOR WRIT OF CERTIORARI TO THE CIRCUIT COURT OF APPEALS FOR THE THIRD CIRCUIT.

WILLIAM H. DAVIS,
Counsel for Respondent.

GALLO & ACKERMAN, Inc., 142 Liberty Street, 'Phones—Hitchcock 8078-9.

TABLE OF CASES CITED.

PAGE

Lektophone Corp. vs. Brandes Products Corp., 20 Fed. (2d), 155 (C. C. A., 3) 2

Lektophone Corp. vs. The Rola Company, 34 Fed. (2d), 764 (C. C. A., 9) 2

White vs. Mechanics Securities Corp., etc., 269 U. S., 283 3

Supreme Court of the United States

MILLER BROTHERS COMPANY,

Petitioner,

vs.

LEKTOPHONE CORPORATION,

Respondent.

RESPONDENT'S BRIEF ON PETITION FOR WRIT OF CERTIORARI TO THE CIRCUIT COURT OF APPEALS FOR THE THIRD CIRCUIT.

This brief is not filed in opposition to the issuance of the writ prayed for. Respondent has no objection to the issuance of the writ if this Court is disposed to consider the instant case at the same time that it considers the *Rola case* which is now by writ of certiorari to the Court of Appeals of the Ninth Circuit on the docket of the Court.

This brief is filed because we think that the petition, and the brief in its support, do not correctly state the issues as to which conflict exists; or the extent to which the issues in the instant case are embraced within that conflict.

The opinion of the Court below, the District Court for the District of Delaware, is published at 37 Fed. (2d), 580, and is printed in the record at pages 13-16.

This Court, on January 27, 1930, issued a writ of certiorari to the Circuit Court of Appeals for the Ninth Circuit in *Lektophone Corporation* vs. *The Rola Com-*

pany on the petition of Lektophone Corporation. The ground stated in Lektophone Corporation's petition for that writ was, that

> "A conflict as to the scope of patent claims, on substantially the same evidence of prior art and substantially the same type of accused device exists between the Court of Appeals for the Ninth Circuit and the Court of Appeals for the Third Circuit."

The conflict did not go to the validity of the patent; only to its scope.

The conflicting decisions were *Lektophone Corporation* vs. *The Rola Company*, 34 Fed. (2d), 764 (C. C. A., 9), and *Lektophone Corporation* vs. *Brandes Products Corporation*, 20 Fed. (2d), 155 (C. C. A., 3).

In the instant case the accused devices are essentially the same as in the *Brandes case* and as in the *Rola case*. The case went to final hearing before Morris, D. J., at Wilmington, Delaware, in May, 1929. The same defenses were presented as in the *Brandes case*, plus an additional defense under R. S., 4897.* On January 23rd, 1930, Judge Morris filed an opinion (37 Fed., 2d, 580, p. 581, and Rec., p. 14) in which he said:

> "The evidence in the case at bar differs in no substantial particular from that in Brandes case. Hence, the decree of this Court, in the pending case, must be dictated by the decision of the Circuit Court of Appeals in the Brandes case unless the defense, here made for the first time, under R. S., 4897 is sound."

He then went on to hold that the new defense was unsound and sustained the complaint.

Appeal has been perfected to the Circuit Court of Appeals for the Third Circuit in the instant case, and

*Quoted in petitioner's brief, page 6.

petitioner asks this Court to issue a writ of certiorari to the Circuit Court of Appeals for the Third Circuit before that Court has passed on the case. Jurisdiction is invoked under Sec. 240 of the Judicial Code as amended by the Act of February 13, 1925 (28 U. S. C., Sec. 347), which is as follows:

> "Sec. 347. Certiorari to circuit courts of appeals and Court of Appeals of District of Columbia; appeal or writ of error to Supreme Court from circuit courts of appeals in certain cases; other reviews not allowed. (a) In any case civil or criminal, in a circuit court of appeals, or in the Court of Appeals of the District of Columbia, it shall be competent for the Supreme Court of the United States, upon the petition of any party thereto, whether Government or other litigant, to require by certiorari, either before or after a judgment or decree by such lower court, that the case be certified to the Supreme Court for determination by it with the same power and authority, and with like effect, as if the case had been brought there by unrestricted writ of error or appeal."

The cases cited in petitioner's brief (p. 5) are not cases in which the writ of certiorari was issued before judgment or decree by the Court of Appeals. However, the power to issue the writ at that stage of a case pending in the lower court seems to be expressly included in this section of the Judicial Code and it seems to have been exercised by this Court in *White* vs. *Mechanics Securities Corporation, etc.*, 269 U. S., 283.

Respectfully submitted,

William H. Dunn

Counsel for Respondent.

FILE COPY

OCT 28
CHARLES ELMO

IN THE

Supreme Court of the United States

OCTOBER TERM, 1930.

No. 68.

MILLER BROS. COMPANY,
Petitioner,

vs.

LEKTOPHONE CORPORATION,
Respondent.

BRIEF FOR RESPONDENT.

WILLIAM H. DAVIS,
of Counsel.

GALLO & ACKERMAN, Inc., 142 Liberty Street, 'Phones—Hitchcock 3078-9.

INDEX.

PAGE

Statement of the Case 2
The Issues 3
The Invention 3
The Issue of Infringement Specifically Stated 4

Summary of Argument 4
The Defense Under Section 4897, R. S. 7
Remarks on Petitioner's Brief 17

1. Petitioner's Point That the Rim in Petitioner's Loudspeakers Does Not Produce Sound 17

2. Petitioner's Assertion That the Cone in Petitioner's Structure Is Not Supported by the Rim but by Three Springs at Its Center (Brief, pp. 17-18 and 21) 21

3. Petitioner's Interpretation of the Word "Tympanum" as Used in the Patent Claims (Brief, pp. 18-29) 22

The Decision of the Third Circuit Court of Appeals 24

1. Blasting (Brief, pp. 41-44) 24

2. Lumiere Reproducer Not Commercial (Brief, pp. 44-45) 32

3. Victor Company Using Loudspeakers Licensed Under the Hopkins Patent (Brief, pp. 45-47) 33

4. The Bodily Movement of the Hopkins Cone (Brief, p. 48) 33

PAGE

Other Points in Petitioner's Brief as to Infringement 35

Petitioner's Contention That Hopkins Patented a Sound Regenerator for Phonographs, Not for Radio (Brief, pp. 13-16) 35

Petitioner's Contention That the Rim and the Cone Must Be of One Piece of the Same Material (Brief, pp. 15-16; 17-18; 20; 24; 32-33) 37

Petitioner's Contention That It Avoids Infringement by Putting Its Loudspeaker in a Cabinet (Brief, pp. 17, 29-32, 33) 39

Petitioner's Point That Its Cone Is Truncated and the Patented Cone Is Not (Brief, pp. 17, 24-36) 40

Petitioner's Contention That Its Structure Does Not Have the Cone Altitude of Claims 3, 6 and 7 of the Patent 42

Petitioner's Contention That Claims 4 and 8 Are, in Fact, Limited to the Minimum Dimensions Expressly Stated in Claims 1, 2, 3, 5, 6 and 7, Irrespective of Whether or Not Those Dimensions Are Numerically Expressed in the Claims 42

Petitioner's Misleading Review of Previous Litigation (Brief, pp. 3-6) 48

Conclusion 53

TABLE OF CASES.

PAGES

American, etc., Co. vs. Prosperity Co., Inc., 295 F., 819 ..... 11, 12
Bennet vs. Fowler, 8 Wall., 445 12
Chapman, et al., vs. Wintroath, 252 U. S., 126 9-10
Diamond, etc., Co. vs. Bayer Co., 13 F. (2d), 337 13
Diamond, etc., Co. vs. Consolidated, 220 U. S., 428 31
Dwight & Lloyd, etc., Co. vs. Greenawalt, 27 F. (2d), 823 ..... 14, 15, 16
Hobbs vs. Beach, 180 U. S., 383 38
King Ax Co. vs. Hubbard, 97 Fed., 796 45
Lektophone Corp. vs. Brandes, etc., Corp., 16 F. (2d), 934 49
Lektophone Corp. vs. Brandes, etc., Corp. (C. C. A.), 20 F. (2d), 155 ..... 2, 3, 24-35, 39, 49
Lektophone Corp. vs. Colonial (unreported) 22, 43, 51
Lektophone Corp. vs. Crosley (unreported) 43, 49-51
Lektophone Corp. vs. Miller, etc., Co., 37 F. (2d), 580 ..... 2, 3, 7-8
Lektophone Corp. vs. The Rola Company, 27 F. (2d), 758 49
Lektophone Corp. vs. The Rola Company (C. C. A.), 34 F. (2d), 64 ..... 2, 3, 49
Lektophone Corp. vs. Sylo, etc., Co., 11 F. (2d), 421 30
Lektophone Corp. vs. Sylo, etc., Co. (C. C. A.), 16 F. (2d), 7 50
Lektophone Corp. vs. Western Electric Co., 20 F. (2d), 150 ..... 30, 31, 49-51
Lektophone Corp. vs. Western Electric Co. (C. C. A.), 16 F. (2d), 10 40
Mason vs. Graham, 23 Wall., 261 ..... 19, 20
Paper Bag Case, 210 U. S., 405 38
Robinson on Patents, Par. 246, page 337, Vol. 1 19

PAGES

Roemer vs. Simon, et al., 91 U. S., 149 36
Sewall vs. Jones, 91 U. S., 171 45
Temco vs. Apco, 275 U. S., 319 ..... 19, 20, 22
United States vs. Anciens Establissements, 224 U. S., 309 38
Wagenhorst vs. Hydraulic, etc., Co., 27 F. (2d), 27... 13
Webster, etc., Co. vs. Splitdorf, etc., Co., 264 U. S., 463 ..... 11, 12, 14
Weston, etc., Co. vs. Empire, etc., Co., 136 F., 599 9
Winans vs. Denmead, 15 How., 330 45

Supreme Court of the United States

No. 68.

MILLER BROS. COMPANY,

Petitioner,

vs.

LEKTOPHONE CORPORATION,

Respondent.

BRIEF FOR RESPONDENT.

Petitioner's statement of the case is so involved with irrelevant discussion of another Hopkins patent (1,271,527) not in this case, and by assumptions about what the Second Circuit Court of Appeals the Southern District Court of Ohio (Western Division) and the Ninth Circuit Court of Appeals* might have decided as to the validity of the patent here in suit (1,271,529) if those courts had not put the question of validity aside and rested their

*The patent has been much litigated in this country and the corresponding patent has been much litigated abroad. The validity of the patent has repeatedly been affirmed by the Courts in this country and abroad. Accused devices of different forms have been adjudicated. Some have been held to infringe and others have been held not to infringe. All these opinions have been printed in a pamphlet entitled "Lektophone Litigation—Opinions and Decrees" which will be filed with this brief, and herein cited as—Pamphlet, page ....

decisions on the question of infringement, that it seems to us necessary (Rule 27, Par. 3) to supply the following:

Statement of the Case.

This case (No. 68) involves the scope and validity of Hopkins' patent 1,271,529, issued July 2, 1918, for an "Acoustic Device" (loudspeaker). It comes to this Court on writ of certiorari issued October 5, 1930, to the Third Circuit Court of Appeals on the petition of defendant below. Conflict having arisen between the Ninth Circuit Court of Appeals in the *Rola case** and the Third Circuit Court of Appeals in the *Brandes case***, the *Rola case* (No. 19) was brought to this Court on certiorari issued January 27, 1930. On January 23, 1930, Morris, D. J., in the District Court of Delaware filed an opinion in the instant case * * * in which he held (Tr., 14):

> "The evidence in the case at bar differs in no substantial particular from that in the Brandes case. Hence, the decree of this Court, in the pending case, must be dictated by the decision of the Circuit Court of Appeals in the Brandes case unless the defense, here made for the first time, under R. S., 4897 is sound."

After that decision in the District Court an appeal was promptly perfected to the Third Circuit Court of Appeals, and this Court was petitioned to issue and did issue the writ of certiorari, before the Circuit Court of Appeals had passed on the case. On joint motion of the parties this case is set for argument immediately following the *Rola case* (No. 19).

**Lektophone Corp.* vs. *The Rola Company*, 34 F. (2d), 64.

***Lektophone Corp.* vs. *Brandes, etc., Corp.*, 20 F. (2d), 155.

****Lektophone Corp.* vs. *Miller, etc., Co.*, 37 F. (2d), 580.

The Issues.

The issues here are:

1. **Whether the Hopkins patent 1,271,529 represents patentable invention over the prior art.**

On this issue the Third Circuit Court of Appeals sustained the validity of the patent in the *Brandes case.* The Ninth Circuit Court of Appeals found it unnecessary to pass upon validity (Opinion, Rola, Tr., 130), and rested its decision on the question of infringement.

2. **Whether the patent is invalid under the renewal Statute, R. S., 4897.**

This issue is presented for the first time in the instant case. The District Court decided in favor of the patent—Opinion, Tr., 14-16.

3. **Whether defendant's two structures** (a larger one and a smaller one) **infringe.**

The Third Circuit Court of Appeals in the *Brandes case* held that two substantially identical structures did infringe. The Ninth Circuit Court of Appeals in the *Rola case* held that a structure substantially identical with the smaller of petitioner's two structures did not infringe.

The Invention.

The nature of Hopkins mechanical combination—the combination of a conical-shaped paper device of proper size provided with flexible edges coupled to a rigid frame used in free air—is set forth in our brief in the *Rola case* (No. 19) and need not be repeated here.

The Issue of Infringement Specifically Stated.

Both of petitioner's two accused devices have the conical-shaped paper device of the size the patentee said the cone should be; and in both the cone is coupled by a flexible peripheral rim or edge to a rigid frame. In both the flexible rim is made of cloth, instead of paper as in the preferred embodiment illustrated and described in the patent.

There is no difference other than this change of rim between either of the two accused devices and the structural embodiment disclosed in the patent.

In the smaller of petitioner's loudspeakers the whole diameter of the cone plus the rim is, because of the use of a narrower rim of more flexible material, slightly less than the nine inches specified in claims 1, 2, 3, 5, 6 and 7, but not specified in claims 4 and 8. In this the structure is the same as the *Rola* loudspeaker and as the smaller loudspeaker held to infringe in the *Brandes case.*

The larger of petitioner's loudspeakers has a tympanum (cone plus rim) whose whole diameter exceeds nine inches. In this the structure is the same as the larger of the two loudspeakers held to infringe in the *Brandes case.*

Summary of Argument.

1. **On the question of patentable novelty** of the Hopkins invention, we refer the Court to the argument in our brief in the *Rola case* (No. 19), where we developed the propositions that—

(a) **The Hopkins device is a three-element mechanical combination comprising a large, light, stiff paper**

cone, coupled by an annular plane peripheral rim to a rigid encircling frame, resulting in a practical direct-acting loudspeaker having a new mode of operation and a new result (Rola brief, pp. 8-18).

(b) Comparison of the patented device with the prior art shows that the invention lay in the new combination, not in the selection of the rim material, which was already old and the material of which is nowise essential so long as its flexibility is preserved (Rola brief, pp. 21-39).

2. On the question of infringement, we refer the Court to the argument in our brief in the *Rola case,* where we developed the propositions that—

(a) Defendant has copied that structure, making only a colorable departure thereform by substituting for the plane peripheral extension of the cone a narrower rim whose desirable flexibility is retained by making it of more flexible material (Rola brief, pp. 18-21).

(b) Neither the disclosure of the specification nor the patent office proceedings limit the broad language of the claims to a rim which is an integral plane peripheral extension of the cone, or otherwise exclude defendant's structure.

(c) On the contrary, change in claim language during the prosecution evidences the patentee's determination, in which the patent office examiner acquiesced (1), that the monopoly should not be limited to a rim which is an annular plane peripheral extension of the cone, and (2) that it should not be limited to exclude equivalent structures in which the overall diameter might be literally less but not substantially less than nine inches (Rola brief, pp. 40-63).

In applying the argument of the *Rola* brief to the instant case, it should be remembered that only the smaller of defendant's two loudspeakers has a whole diameter of cone plus rim slightly less than nine inches, attained without encroaching upon the recommended size of cone by using a narrower rim which is, however, made of more flexible material so that its desirable flexibilty is not impaired.*

In the larger of petitioner's loudspeakers, even this colorable departure from the physical embodiment disclosed in the patent is absent.**

To this we desire to add only the remark that petitioner sells to the same trade for the same purpose its larger loudspeakers and its smaller loudspeakers. It is thus made so clear that the slight difference between them does not affect the mode of operation of the three-element combination, and is not a substantial difference, that petitioner's counsel in his brief avoids all discussion of the overall diameter of the cone plus the rim. Counsel avoids that discussion by putting an interpretation upon the word "tympanum," as used in the patent claims, that excludes the rim of defendant's loudspeakers but includes the rim of the Hopkins loudspeaker (See our discussion of Petitioner's Brief, *post*, p. 22).

3. **In this brief we shall discuss the question whether the patent is invalid under the renewal statute, R. S.,**

---

*The patent says (p. 2, lines 79, et seq.) that if satisfactory regeneration of sounds is to be had the whole diameter of the tympanum, that is, the diameter of the aperture in the supporting rings, should exceed nine inches, and the base of the conical portion should exceed in area one-half the area of the tympanum. Petitioner's smaller cone has a diameter of 7 inches (dimension b, Exhibit 5, Tr., 451) and the whole diameter of the tympanum is 8 inches (dimension a, Exhibit 5, Tr., 451). A cone whose area is one-half the area within a nine-inch circle has a diameter that is 6.36 inches (Tr., 155).

**In it the cone is 8½ inches in diameter (dimension b, Exhibit 5, Tr., 451) and the whole diameter of the tympanum is 9½ inches (dimension a).

4897. Respondent's position is that **the renewal in the instant case, having been filed within two years after the original allowance, in accordance with the requirements of Sec. 4897, is not subject to challenge; and that the subsequently filed divisional application, which was promptly filed and contained no new matter, has the valid status of the renewed application.**

4. Following that discussion, the remainder of this brief will state categorically respondent's position on the several points made in petitioner's brief.

The Defense Under Section 4897, R. S.

The facts are correctly stated by Morris, D. J., and are followed by his conclusions of law, as follows (Opinion, Tr., 14-16):

> "That section provides in part:
>
> 'Any person who has an interest in an invention or discovery, whether as inventor, discoverer, or assignee, for which a patent was ordered to issue upon the payment of the final fee, but who fails to make payment thereof within six months from the time at which it was passed and allowed, and notice thereof was sent to the applicant or his agent, shall have a right to make an application for a patent for such invention or discovery the same as in the case of an original application. But such second application must be made within two years after the allowance of the original application.'
>
> The original application, filed July 14, 1913, was allowed April 11, 1916, but the final fee was not paid within six months from such allowance. On March 22, 1918, twenty days less than the two-year statutory

period, the second or renewed application was filed. Six days later an amendment was filed cancelling claims 25, 26 and 27 with the statement that those claims had 'been cancelled, as those claims will be incorporated together with others, in a divisional application directed to the tympanum or diaphragm per se.' The divisional application resulting in the patent in suit was filed April 17, 1918, or six days more than two years after the allowance of the original application. The specification of the patent in suit states that the invention thereof 'is to be considered as a division of the invention shown and described in my prior application, renewed March 22, 1918.'

In support of its contention that the divisional application was invalidated by R. S., 4897, defendant relies upon *Chapman* vs. *Wintroath,* 252 U. S., 126; *Western* [*Weston*] *Electrical Instrument Co.* vs. *Empire Electrical Instrument Co..,* 136 Fed., 599 (C. C. A., 2) and *Dwight & Lloyd Sintering Co.* vs. *Greenawalt,* 27 Fed. (2), 823, 831 (C. C. A., 2). These cases do not, however, in my opinion sustain defendant's view. **They contain nothing,** particularly when read in connection with *Webster Co.* vs. *Splitdorf Co.,* 264 U. S., 463; *American Laundry Machinery Co.* vs. *Prosperity Co.,* 295 Fed., 819 (C. C. A., 2); *Diamond Power Specialty Corp.* vs. *Bayer Co.,* 13 Fed. (2d), 337 (C. C. A., 8); *Wagenhorst* vs. *Hydraulic Steel Co.,* 27 Fed. (2d), 27 (C. C. A., 6), **that denies to the divisional application, which was filed promptly after the filing of the unchallenged renewed application and contained no new matter, the valid status of the renewed application.''** (Emphasis ours.)

We can add nothing to this except, perhaps, a handy statement of the cases referred to.

In *Weston, etc., Co.* vs. *Empire, etc., Co.,* 136 Fed., 599 (C. C. A., 2, March 8, 1905), the patent was held invalid under R. S., 4897. The original application was allowed October 13, 1885.* The application was forfeited by failure to pay the final fee within six months and was renewed June 18, 1886. It was allowed a second time on June 30, 1886, again forfeited, and renewed again on December 14, 1887. The Court held that the final application "must be made within two years after the allowance of the original application, the term 'the original application' as used in this section meaning the first application." In so holding the Court approved the construction given to the section in opinions of the Attorney General (69 Patent Office Official Gazette, 639, 70 Ib., 493) of June 30, 1894 and January 18, 1895, which from that time had been acted on by the Patent Office (see 131 Fed., 91).

The Court said (136 Fed., 599):

> "The construction contended for by the appellant would permit an indefinite prolongation of a monopoly by means of unlimited forfeitures and renewals, and would nullify the policy of the law which requires diligence in the prosecution of applications for and issuance of patents."**

In *Chapman, et al.,* vs. *Wintroath,* 252 U. S., 126, decided March 1, 1920, Section 4897 was not involved. Chapman, et al., filed an application in 1909. In 1912, Wintroath filed an application upon which a patent issued November 25, 1913. The Chapman, et al., application of 1909 described, but did not claim, the subject-

---

*See the decision of the District Court, 131 Fed., 90.

**Petitioner's counsel says in his brief (p. 12):

> "The evils which that section of the statutes sought to cure are present in full force in the present instance."

But clearly that is not true. In the instant case there was but one renewal, which is not challenged. The subsequent timely division of the renewed application did not, any more than any other lawful amendment, prolong the monopoly or delay the issuance of the patent.

matter of the Wintroath patent. On July 6, 1915, about twenty months after the issuance of the Wintroath patent, Chapman, et al., filed a division of the 1909 application, in which division the claims of the Wintroath patent were copied. An interference having been declared in the patent office the case came to the Court of Appeals of the District of Columbia. That court decided in favor of Wintroath on the ground that the delay in filing by Chapman, et al., for more than one year after the date of the Wintroath patent was equitable laches which barred the later application. This conclusion was by analogy from Section 4894, R. S.* This Court reversed that decision, measuring the presumptive period of equitable laches by the two-year rule of Sections 4886, 4887, 4897 and 4920, in preference to the one-year period of Section 4894.

In that decision, referring to the two-year rule of Section 4886, this Court used the language emphasized on page 11 of petitioner's brief—

> "* * * and no distinction is made between an original and a later or divisional application, with respect to this filing right."

That language was, however, used merely to say that the presumptive period of equitable laches in all patent prosecution is the two-year period of Sections 4886, 4887, 4897 and 4920, rather than the one year period (now six months) provided by Sec. 4894 for the filing of amendments.

---

*The pertinent part of R. S., Sec. 4894, was at that time as follows:

> *"Time of completing application; applications regarded abandoned.* All applications for patents shall be completed and prepared for examination within one year after the filing of the application, and in default thereof, or upon failure of the applicant to prosecute the same within *one* year after any action therein, of which notice shall have been given to the applicant, they shall be regarded as abandoned by the parties thereto, unless it be shown to the satisfaction of the Commissioner of Patents that such delay was unavoidable."

In *American, etc., Co.* vs. *Prosperity Co., Inc.,* 295 Fed., 819 (C. C. A., 2), decided January 25, 1924, there was a motion to dismiss the bill on the ground that it did not allege that more than two years prior to the date of filing the *divisional application* on which the patent issued, the invention had not been in public use or on sale in this country and had not been patented or described in any printed publication in this or any foreign country. The motion was granted by the District Court (292 Fed., 144), but that decision was reversed by the Court of Appeals on the ground that a divisional application, in the absence of laches, estoppel, or intervening rights, relates back to the original from which it was carved and will be regarded as having the filing date and priorities of that original (295 Fed., 823).

In support of the motion, it was urged that the *Chapman case* in this Court laid down a peremptory rule that a divisional application must be filed within two years after any prior public use or prior publication or patenting. But the Court said (295 Fed., 821):

"We feel assured that no such rule exists."

In *Webster, etc., Co.* vs. *Splitdorf, etc., Co.,* 264 U. S., 463, decided April 7, 1924, claims 7 and 8 of the patent were held void because of laches in presenting them to the patent office. The claims were presented by an amendment to a divisional application eight years and four months after the filing of the original application, five years after the date of the patent to Podlesak disclosing the subject-matter, and three years after the commencement of the suit. There was doubt whether they were not so materially enlarged as to preclude their allowance in the original application, and there was evidence which satisfied the Court that the patentee had not originally intended to assert the claims because he considered their subject-matter one merely of design and not of invention, and during all of the elapsed time the

patentee and his assignee simply stood by and awaited developments (264 U. S., 465). The Court pointed out that it was not a simple case of a division, citing *Bennet* vs. *Fowler,* 8 Wall., 445, 448, and *American Laundry Machine Co.* vs. *Prosperity Co., Inc.,* 295 Fed., 819, but was a case of unreasonable delay.

The decision of the lower Court (C. C. A., 7—283 Fed., 93) had rested primarily on *Chapman* vs. *Wintroath,* which plaintiff contended had been misunderstood and misapplied. This Court felt the question thus presented important, and one that should be authoritatively determined (p. 469). It pointed out that the lower Court had held that the effect of the decision in the *Chapman case* was to fix the period during which a divisional application must be filed at two years from the date of the issuance of the other patent, and this Court said (pp. 469-70):

> "But *Chapman* vs. *Wintroath* is not to be so narrowly construed. * * *"

And (pp. 470-71):

> "If this were all, it might justify the conclusion that a hard and fast time limit of two years is to be applied in every case of a divisional application. But a reading of the entire opinion demonstrates that this conclusion is erroneous."*

---

*Petitioner's counsel (brief, p. 9) after pointing out that the divisional application on which the patent here in suit issued was filed "more than two years subsequent to the original allowance of the subject-matter thereof" says:

> "That is what is expressly prohibited by the provisions of Section 4897, R. S."

But Sec. 4897 does not relate at all to divisional applications. Divisional applications are not provided for by any statute. They have grown up as a convenience of Patent Office practice and are nothing more than a form of amendment (*Bennet* vs. *Fowler,* 8 Wall., 445, 448, and *American, etc., Co.* vs. *Prosperity Co., Inc.,* 295 Fed., 819, cited with approval by this Court in *Webster* vs. *Splitdorf*).

In *Diamond, etc., Co.* vs. *Bayer Co.*, 13 Fed. (2d), 337 (C. C. A., 8), decided May 7, 1926, the application had been forfeited and renewed under Sec. 4897. The patentee had published an article describing the invention prior to the forfeiture and more than two years prior to the date of the renewal. The Court held that the renewal application properly filed within two years under Sec. 4897 has the benefit of the original application, and the two-year period must be reckoned from the date of the original (13 Fed., [2d], 340). The Court discussed *Chapman* vs. *Wintroath* (p. 340) and *Webster* vs. *Splitdorf* (p. 339), and pointed out that neither of them is in point.

In *Wagenhorst* vs. *Hydraulic, etc., Co.*, 27 Fed. (2d), 27 (C. C. A., 6), decided June 20, 1928, the original application was filed in April, 1921. In November, 1923, the patentee learned that there was commercial demand for the specific form disclosed in the original application, but covered only generically, if at all, in the original claims. He thereupon filed a divisional application containing specific claims to this particular form. The Court of Appeals held that the divisional application was not different from an amendment, that it has the benefit of the original filing date, and that there had been no such delay as to invalidate the claims. The Court pointed out (footnote, p. 28) that characterizing a division as an amendment is not inconsistent with *Chapman* vs. *Wintroath*, and said of that case (p. 29):

> "The opinion has been sometimes thought to indicate that the deadly two-year period begins to run from the time of filing the original application; but not only does a careful reading show that this is not said, but it is plain that, if such were the rule, the decision of the case must have gone the other way, for more than two years had expired after the orig-

inal application was filed before the date of the divisional one."

The Court also discussed *Webster* vs. *Splitdorf* and said (p. 29):

> "The summation at the end of the opinion says that the two-year limit under discussion applies to divisional applications. No doubt it does; but this is not to say that it applies to them in any other or different way than it would apply to a parent application, where the right to make claims has been lost by laches; the fact that they appear in a so-called divisional application, later filed, does not help them. From the recitals and reasoning of the opinion, we are unable to see that the fact that the amendment of 1918 was presented in a divisional application, instead of an original application, was of any importance to the result reached."

In *Dwight & Lloyd, etc., Co.* vs. *Greenawalt*, 27 Fed. (2d), 823 (C. C. A., 2), decided August 20, 1928, the patent (No. 1,433,350, at p. 830) was issued under the following circumstances: The original application was allowed on March 14, 1908. It was renewed, within the two-year period, by the filing of two applications, the first a divisional application filed February 4, 1910, and the second, a renewal of the parent application filed February 17, 1910. The divisional application was itself allowed on May 26, 1911, but was forfeited and again renewed on April 26, 1912, over four years after the allowance of the original application on March 14, 1908. Applying the rule in *Weston, etc., Co.* vs. *Empire, etc., Co.*, the Court held the patent void under Sec. 4897 because it was based on a second renewal filed more than two years after the first allowance.

Plaintiff's contention was that the divisional application should be treated as an original application, and so freed from the time limit of Sec. 4897 under which the original application rested. But the Court said that the divisional application should be treated as a continuation of the original application, thereby bringing the case directly within the rule in *Weston* vs. *Empire.* The whole effect of the decision was that applicant cannot escape the time limit put on renewal applications under Sec. 4897 by presenting the renewed application, or any part of it, as a division.

So far as any defense under Sec. 4897 is concerned, the *Dwight & Lloyd case* has no bearing on the present discussion any more than has the decision in *Weston* vs. *Empire,* because in the instant case the renewal was effected within the statutory period and there was only one renewal.

On the other hand, the decision in the *Dwight & Lloyd case* makes it very clear that a division which is not affected by laches and contains no new matter has under all circumstances the status of the original application. The Court said (p. 831):

> "It is now settled law, in spite of any doubts that may have been cast upon it by certain observations in Chapman vs. Wintroath, 252 U. S., 126, 40 S. Ct., 234, 64 L. Ed., 491, that a divisional application is no more than an amendment in the parent application, at least unless 'new matter' be introduced in the specification, which, whatever latitude it gives, was not the case here. Webster vs. Splitdorf, 264 U. S., 463, 44 S. Ct., 342, 68 L. Ed., 792; American Co. vs. Prosperity Co., 295 F., 819 (C. C. A., 2); Westinghouse vs. Jeffrey, 22 F. (2d), 277 (C. C. A., 2);

Wagenhorst vs. Hydraulic Co. (C. C. A., 6), 27 F. (2d), 27."

So in the present case, the divisional application which was promptly filed after the unchallenged renewal, and contains no new matter, has the valid status of the renewed application.

The Court will not be misled, we suppose, by the somewhat extraordinary suggestion of petitioner's counsel (Brief, p. 10) that the effect of the *Dwight & Lloyd* decision was to hold that all divisional applications are renewal applications. In that case the divisional application, to which the Court referred in the words emphasized in petitioner's brief (p. 10), was in fact a renewal of part of the subject matter of the original application, having been filed before the renewal of the parent application. In the instant case the renewal of the parent application was filed before the two-year period and before the division was made.

The discussion of this defense under Sec. 4897 slides off, in petitioner's brief (p. 12), into an assertion that in the divisional application Hopkins "attempted to expand the divisional patent beyond what was originally intended to be granted by the claims which were allowed in the parent application." No such defense is pleaded in the answer nor was any such defense urged before the lower Court. The fact is that from the very beginning Hopkins claimed the very subject-matter of the divisional application—the sound regenerator *per se* (see original claims 15-20, Tr., 343-345, and A. F. W., 1*)—and the claims allowed in the original application (claims 25, 26 and 27) were, as petitioner's counsel points out, copied

*The file wrappers are so hard to follow that we have extracted from them and printed separately the file wrapper history so far as it pertains to the subject-matter in issue. See pamphlet "Abbreviated File Wrapper History Including All that Pertains to the Subject-Matter in Issue," referred to hereinafter as A. F. W.

into the divisional application. Indeed, it is upon the fact that these very allowed claims became the subject-matter of the divisional application that petitioner's counsel bases his argument of invalidity under Sec. 4897.

Remarks on Petitioner's Brief.

Since the only real difference* between petitioner's loudspeakers and the structural embodiment of the invention disclosed in the patent is the change in the rim, it follows that **the only points in petitioner's brief that can have significance, so far as infringement is concerned, are those based on this difference in the rim.**

These points are that the rim in petitioner's structures (1) does not in itself produce sound, (2) does not support the cone, and (3) is not to be included in measuring the whole diameter of the tympanum.

1. *Petitioner's Point That the Rim in Petitioner's Loudspeakers Does Not Produce Sound.*

As a matter of fact this point is trifling, and as a matter of law it is without significance, as we are assured by a simple process of reasoning and by many pertinent decisions of this Court.

The facts are as follows: Petitioner's expert Dr. Miller admitted (Tr., 130-131 and 143) that the cloth rim in petitioner's structure yields so as to permit the bodily movement of the cone, and petitioner does not attempt to deny that the cloth rim is effective to prevent that excessive deformation (weaving or fluttering) at the edge of the cone that if unrestrained would cause blasting (see Miller, Tr., 50 and Farrand, Tr., 167). This is the

*The trifling truncation of the cone in the defendant's structure (see *post*, p. 40) is not a real difference. The structure remains none the less a cone.

functional purpose and the cooperative relationship of the rim to the other elements of the patented combination.

But Dr. Miller testified (Tr., 42 and 43) that the cloth rim is not of vibratile material capable of giving off sound.* Elaborating this he said (Tr., 143):

> "When I said it was not effective in the acoustical sense I meant that the cloth rim itself produces no effective sound. I think it produces a sound that would be inaudible and would have nothing to do with what we hear from it.
>
> As to what I meant when I said it did produce some sound—when I spoke in that way I meant that sound would be any kind of a wave motion in the air of any sort, even a minute sound or a confused sort of a sound. I did not say that the rim did produce any sound.
>
> The point of my assertion is that the cloth rim of the Fada cone is not made of a vibratile material."

That the sound produced by the paper rim of the structural embodiment disclosed in the patent is in itself of trifling amount is shown by the testimony of respondent's expert, Mr. Farrand, who said (Tr., 192-193):

> "As to whether or not, in a cone structure made with a paper rim such as Plaintiff's Exhibit 31, that the paper rim gives off sound waves, I believe that any body by vibrating, if the body is capable of re-

*The pillulous smallness of this distinction is shown by his testimony (Tr., 67) where he distinguishes the cloth rim from a rim of gold beater's skin (Elfering patent) which he says is not porous and has vibrations whereas the petitioner's cloth rim is porous; by his testimony (Tr., 107) that if the rim were made of cork (English patent) it would have some, although very little, acoustic effect; and by his testimony (Tr., 108) that if the rim were made of rubber it would have a different acoustical effect from the material of the cone, depending upon the character of the rubber.

> flecting sound waves, will give off sound waves and paper is no exception to that. The paper in that particular device, Plaintiff's Exhibit 31, contributes in a very small degree to the production of sound and at the higher frequencies contributes much less."

As a matter of law, petitioner's argument on this point, as on all the other points based upon the change in the rim, is fundamentally unsound because it rests upon an attempt to differentiate the patented combination from the infringing combination by directing attention to the individual mode of operation of different forms of rim, disregarding the admitted cooperative relation of the rim to the other elements of the combination.

That other forms of rim, which retain this functional relationship to the other elements of the combination, have in themselves other individual characteristics is beside the point. Infringement is to be determined by considering the cooperative relation of the elements of the patented combination to one another and by inquiring whether the accused device has the same number of elements obeying the same law of cooperation. That is the rule established by this Court in *Mason* vs. *Graham*, 23 Wall., 261, repeatedly applied since that time, and quite recently applied in *Temco* vs. *Apco*, 275 U. S., 319. It is expressed by Mr. Robinson in his work on the law of patents as follows (paragraph 246, p. 337, Vol. 1):

> "It [the doctrine of equivalents] does not indicate identity either in essential character or individual function, but merely the ability to produce the same effects when brought into connection with the other elements in the invention. It is in this sense that the word is used in speaking of the 'Doctrine of Equivalents.'"

And again (p. 339, paragraph 249):

> "Hence it is evident that similarity in individual character does not create, nor does diversity in individual character destroy, equivalence between such acts and substances as are thus capable of substitution for each other. However unlike in name, shape, size, capacity, proportions, arrangement, or material they may appear to be, when studied only in connection with each other, if when brought into their position in the art or instrument their interchangeability is manifest, these individual variations become of no importance. Equivalence resides in use, not in intrinsic attributes; and similarity of use alone is necessary to make one act or substance the equivalent of another."

In *Mason* vs. *Graham* the patented combination, a picker staff motion in looms, involved as one element a flexible connection between the rocker of the picker staff and the bed on which it rocked. The connection in the structural embodiment of the patent was quite different from the infringing connection. This Court could not have arrived at a holding of infringement if it had directed its attention to the individual character of that element.

In *Temco* vs. *Apco*, 275 U. S., 319, the flexible connection between the leaf spring and the axle of an automobile as used by defendant was very different from, and a definite improvement upon, the disclosure of the patent, but it was an infringement nevertheless. This Court at page 325 discussed the individual differences between that particular element of the combination as disclosed in the patent and as used in defendant's combination, but pointed out that infringement was not avoided because the two combinations operated in the same manner and produced the same result and because the function of the changed element in defendant's combination

was the same as the function of the like element in the patented combination, notwithstanding the differences in their individual characters when studied only in connection with each other.

Respondent's position therefore is that this point is unsound in law and insignificant in fact.

2. *Petitioner's Assertion That the Cone in Petitioner's Structure Is Not Supported by the Rim but by Three Springs at Its Center* (Brief, pp. 17-18 and 21).

On this point, petitioner's evidence does not support its assertions. Counsel refers to the testimony of Dr. Miller at pages 48-50 of the Transcript. Dr. Miller at first asserted that petitioner's cone is supported and restrained just in the degree required for its movement in the production of sound by means of a spring arrangement consisting of three arms attached to the vertex of the cone. But he added (p. 49) that movement of the cone exerts a tension on the rim, and (p. 50) that the rim—

> "* * * serves to hold the paper cone against the force of gravity from such sagging as might take place on account of the flexibility of the central springs."

On cross examination (Tr., 143) he admitted that when defendant's cone is separated from its actuating unit, including the centering springs, the cloth rim supports the cone; that when the cone is moved by pressure from its neutral position the cloth rim returns it to its neutral position; and that in the operation of the device, the rim yields to permit the movement of the cone. On re-direct examination (Tr., 145), he said that **in petitioner's device the cloth rim is one of the two forces that combine to maintain the cone in its neutral position and restore it to its neutral position when it is moved therefrom,** the other force being the spring arms.

That being the fact, the rule applied by this Court in *Temco* vs. *Apco* (*ante*, pp. 19-21) is also determinative of this point.

3. *Petitioner's Interpretation of the Word "Tympanum" as Used in the Patent Claims* (Brief, pp. 18-29).

By a process of reasoning that seems to us entirely devoid of reality, petitioner's counsel translates the change in rim material, which is the only real difference between petitioner's structures and the structural embodiment disclosed in the patent, into an asserted departure (even in the larger of petitioner's loudspeakers) from the dimensions recommended in the patent.

This argument seems to us entirely unreal. We do not think anyone could really doubt that in petitioner's device the rim is part of such a tympanum as is referred to in the claims.* Its unreality is evidenced, we think, by the extraordinary conclusions deduced from it in petitioner's brief.

Counsel agrees with us that in the patent claims the word "tympanum" is used to define the cone plus the rim. Then counsel asserts that because the whole area of the Hopkins tympanum—the rim as well as the cone—is the "sound regenerator" (brief, p. 20), the word "tympanum" in the claims must be taken to mean the sound reproducing element; that the cloth rim does not reproduce sound; and that consequently the word "tympanum" as applied to defendant's structure must mean the cone alone, not the cone plus the rim.

From the proposition counsel deduces that in petitioner's structure the tympanum (which is now taken to mean the cone alone) is not "rigidly supported at its periphery," notwithstanding the fact that the peripheral

*See Judge Galston's straightforward discussion of the same argument in the *Colonial case* (Pamphlet, pp. 115, et seq.).

edge of the flexible rim is rigidly supported in the metal frame as in the patent. Counsel says (brief, p. 21):

> "Instead, it is *movably* connected to the sound absorptive porous cloth ring. It would not operate successfully if it *was* rigidly supported at its periphery." (Emphasis theirs.)

It is quite true that these cones would not operate successfully if they were rigidly supported at the periphery (Tr., 158). It was for that reason that Hopkins introduced the flexible rim between the cone and the rigid frame. It seems to us that an argument which leads to the conclusion that defendant avoids infringement by using the operative three-element combination of Hopkins, instead of an inoperative two-element combination in which the cone would be rigidly supported at its periphery, destroys itself.

Again, counsel uses his peculiar interpretation of the word "tympanum" upon which to base the assertion that the tympanum even in petitioner's larger device does not exceed nine inches in diameter, although it is apparent that the elements of the structure within the encircling frame (the cone plus the rim) exceed nine inches in diameter, as in the patent.

Further, this interpretation of the word "tympanum" leads petitioner's counsel to assert (p. 25) that the encircling frame in petitioner's structure is not a support for the tympanum, although it obviously is such a support in the very sense of the Hopkins patent—a rigid support coupled to the cone by an interposed flexible rim.*

---

*Incidentally, counsel here erroneously asserts that the aperture in the metallic supporting rings of petitioner's larger structure is only 8¼ inches in diameter, referring to dimension *g* on the drawing (Tr., 451). But that dimension *g* is not the dimension of the aperture in the supporting frame. The dimension of the aperture in the supporting frame is the dimension *a*, which is 9½ inches.

The Decision of the Third Circuit Court of Appeals.

Petitioner's counsel undertakes (Brief, pp. 40-49) to "convince this Court that the Third Circuit Court of Appeals was led into four fundamental errors of fact on which it predicated its decision" in the *Brandes case*. We shall discuss them under the four headings applied in petitioner's brief.

1. Blasting (Brief, pp. 41-44).

(a) Counsel says that the Court's understanding of the mode of operation of Hopkins' device is scientifically erroneous, especially as expressed in the words,

> "As we understand the action of the cone in free air, waves of different frequency are shed or emitted from the cone at various zones; that is to say, all the high frequency waves pass off into the open air near the apex of the cone, and as the waves become of lower frequency they will not pass off except from the farther out edges of the cone."

This is the highly valuable and unforeseeable advantage of Hopkins' properly mounted light stiff paper cone of adequate area—that it adapts itself to sound vibrations of all important frequencies—to which we referred in a footnote on page 11 of the *Rola* brief. It is a very interesting phenomenon inherent in the operation of Hopkins' three-element structure. It has proved somewhat difficult to explain, and **we think it would be quite safe for any Court to rest its decision on structural aspects alone, whether or not it achieved a correct understanding of this phenomenon.** But that the Judge who wrote the opinion for the Third Circuit Court of Appeals correctly understood it we feel sure.

It was testified to by Mr. Hopkins and by Mr. Farrand in the *Brandes* record and that testimony was repeated

in different words, but to the same effect, in the record here. In fact, in the instant case, it was finally confirmed by the testimony of petitioner's expert, Dr. Miller, notwithstanding his criticism* at page 99 of the record, to which counsel refers (Brief, p. 42).

Mr. Hopkins testified (Tr., 279-280):

> "All of the energy is applied at the apex. It must flow to the outer edge and as the energy flows it is really a bend or wave in the cone running from the apex down to the edge. It goes in a wave and there is a time element in it.
>
> Because it goes in a wave and its energy is being damped off all the time by the energy flowing down to the edge, because it goes in a wave, it can let off any amount of energy that happens to be there. If you have a very high vibration it will be damped off right near the apex. It does not need much area to damp that off, and the energy is expired.
>
> The energy in the bass notes requires a large area. That continues in the paper in the form of a wave down towards the edge and gets the movement of the whole cone encountered so that it is damped off into a large area there."

And (Tr., 281):

> "RXQ313. You stated that using this cone you obtained unexpected results. What was unexpected about it?

---

*This criticism is not so much a denial that the phenomenon exists, as a criticism of Judge Buffington's manner of expressing himself in the words—

> "as the waves become of lower frequency they will not pass off except from the farther out edges of the cone."

If Judge Buffington had said—

> "as the waves become of lower frequency they are emitted from greater areas which finally extend to the very edges of the cone"

the criticism could not be made.

A. It was far more efficient over the whole range especially the lower end of the range than I believed we had a right to expect from the structure.

RXQ314. Then its efficiency over the audible range is the unexpected result that you obtained?

A. Yes."

Mr. Farrand testified (Tr., 181):

"The wave in a cone as initiated by the vibration applied in an axial direction and the area near the source, that is nearest the apex, is principally active in producing the sound wave. At the higher frequencies, this area is very small. At 5,000 cycles it may only be an inch in diameter. As the frequency is decreased, this area becomes larger and larger until at the lower frequencies of 50 to 100 cycles it encompasses the entire cone structure itself."

Dr. Miller testified (Tr., 138):

"When you impress these vibrations on the apex of one of these cones, the apex starts to move forward, compressing the air in front of it.

The paper of the cone, having some flexibility, bends somewhat, so that as you recede toward the edge of the cone the paper towards the edge does not follow in exactly the same time as the apex moves; it lags behind it."

And (Tr., 139):

"I mean that the amount of flexure and the point or points at which flexure occurs would depend upon the frequency of the vibration and its amplitude."

The only thing that petitioner's counsel advances against this is the assertion (p. 42).:

> "As is visibly demonstrated by sand patterns of the vibratile member of both Lektophone* loudspeakers and Fada loudspeakers, it is apparent that all frequencies, i. e., all tones emanate from *all* portions of the vibratile material throughout its area (Rec., p. 557; see also Petitioner's physical exhibits)." (Emphasis his.)

Counsel refers to no testimony to support this assertion, and we do not believe that it will be "apparent" to this Court, on mere examination of these photographs, how the tones emanate from the loudspeakers.

But the testimony shows that this advantageous phenomenon present in the Hopkins loudspeaker and also in the petitioner's loudspeakers **is clearly evidenced by the sand patterns.** The sand patterns to which counsel refers are produced by dusting a light powder onto the surface of a cone vibrated at a chosen frequency. The powder arranges itself so as to frame (not very clearly but sufficiently to be significant to those skilled in such matters) the areas of greatest vibration of the cone's surface. The powder forms what is known as Chaladni figures by settling in the regions of little or no vibration (nodes) so framing the areas of maximum vibration (loops). The sand patterns do not show the bodily movement of the cone, but only the flexing of the different portions of the cone as it accommodates itself to the frequency impressed upon it. **And in showing this they confirm, as petitioner's expert Dr. Miller admitted, the characteristic mode of operation of the Hopkins cone to**

*The word "Lektophone" loudspeaker is here used to mean the Hopkins loudspeaker so that counsel is here identifying the mode of operation of petitioner's loudspeaker with the mode of operation of the patented loudspeaker. Whatever the correct explanation of the phenomenon may be, it is agreed that what the sand patterns show to be true of petitioner's loudspeaker they also show to be true of the loudspeaker specifically disclosed in the patent.

which the Third Circuit Court of Appeals refers. Dr. Miller said (Tr., 139):

> "These radial waves giving rise to circular nodes that are shown here in the sand patterns are the reflection of that flexing of the cone."*

These sand patterns not only show the circular nodes which reflect the flexing of the cone to accommodate itself to the particular frequency impressed, which is the characteristic advantage of the structure to which the Third Circuit Court of Appeals referred, but they also show the radial nodes caused by the detrimental or parasitic waves which tend to produce blasting, and will produce blasting unless the deformation of the peripheral edge of the cone is restrained by a flexible rim.

This was explained by Mr. Farrand in connection with his charts (Tr., 173-178, Pltf.'s Exs. 35-36; Tr., 457 and 459), and he summarized as follows (Tr., 178-9):

> "The conclusions I draw from this chart are that they show the effect of adding the plane peripheral rim to a conical diaphragm restricting the parasitic wave to such a degree that the cone may be properly loaded with a useful vibration."

He also said (Tr., 179):

> "The radial wave is essential to the reproduction of the sounds of an orchestra. The circular node is incidental to this.
>
> The radial node, or at least the waves incident to the formation of radial nodes, are not essential. They are not only not essential, they are detrimental."

---

*And see the full discussion of the subject by respondent's expert Farrand (Tr., 173-178) with reference to his charts (Exhibits 35 and 36, Tr., 457 and 459).

He demonstrated this (Tr., 167) by vibrating simultaneously Defendant's Exhibit O, one of petitioner's loudspeakers, and a similar loudspeaker with the flexible rim removed. Petitioner's loudspeaker played without blasting, while the device with the rim removed blasted. The actual deformation of the edge of the cone by the parasitic waves running around the cone and building up radial nodes and loops until finally the elastic limit of the paper is exceeded and blasting occurs, was shown both audibly and visibly, and he said (Tr., 158):

> "With no restraint on the edge of the cone at all, you would expect to have such a freedom that increased efficiency would result but practically the edge would lack support and the periphery of the conical portion would deform much in the same manner as a bell deforms when hit with a blow at its periphery.
>
> This deforming vibration, a sort of a parasitic vibration, builds up and gives rise to paper rattle or blasting."

That blasting was the defect of the Starling & Cole light paper cone without support at its edge. Hopkins cured this by adding his rigid frame with the interposed flexible rim. As he says (Tr., 278):

> "* * * it was that thing working with that mode of operation that we combined with a support and a means for suppressing some of its objectionable features."

(b) Petitioner's counsel further criticizes (Brief, pp. 42-43) the decision of the Third Circuit Court of Appeals with respect to the finding of fact which that court expressed in the words:

> "Now it seems to us that Hopkins was the first to point out that this blasting effect caused by the local vibrations at the edge of the cone would be prevented and the cone held restricted to vibrations as a whole and the weaving prevented by the expedient of using a rigid frame and making a liaison between the edges of the cone and the clamp of the rigid frame by a flexible yielding liaison belt which vented and thereby prevented the obnoxious fluttering of a cone's edges not rigidly held."

Insisting that the "phenomenon of blasting is not mentioned or even remotely suggested in the file history of the Hopkins patent or in the patent itself,"* counsel nevertheless is unable to deny that Hopkins was the first to apply to a paper cone of proper size acting on free air, the expedient of using a rigid frame and making a liaison between the edges of the cone and the clamp of the rigid frame by a flexible yielding liaison belt whereby the cone is held restricted to vibration as a whole and the obnoxious weaving or fluttering of a cone's edges not rigidly held is prevented.

Since the patentee was the first to produce the three-element mechanical combination consisting of a conical-

---

*Petitioner's counsel for some reason, which we have never been able to understand, insists here, as he has insisted before, that this matter of blasting was not mentioned until "after two trials [the *Sylo* trial and the *Western Electric* trial] had been had in litigations involving the patents." The subject was not mentioned in the *Sylo case* because at the time of that trial the Starling & Cole publication was not relied upon by defendant. That publication came in for the first time in the *Western Electric case* and there the blasting effect inherent in it, which was overcome by Hopkins when he coupled the cone by a flexible rim to a rigid frame, was emphasized; as clearly appears from the decision of Judge Thacher in the *Western Electric case*, where he said of the Starling & Cole device (pamphlet, p. 28):

> "Volume was lacking, and when to increase its volume this device was driven with increased power unwelcome buzzing and rattling sounds were heard, apparently caused by the shaking of the unsupported edges of the extremely light paper cone."

shaped paper device of proper size coupled by a flexible rim to a rigid frame, used in free air, whereby this "obnoxious fluttering of a cone's edges" was overcome, and since he adequately disclosed this combination in his patent, it makes no difference what he may have said or left unsaid about the advantages inherent in the structure.*

Counsel refers, it is true, to the prior art patents to Stroh and to Lumiere (Brief, pp. 43-44), but when petitioner's expert was asked (Tr., 142-143) whether or not he could find in the patents and publications of the prior art "this mechanical combination, a conical-shaped paper device impressing sound directly upon the air, that is, without the interposition of a sound-box and horn provided with flexible edges and coupled to a rigid frame," he could think only of the patent to English, which is one of the small sound-box and horn combination patents. And he immediately admitted that this is not a direct-acting loudspeaker, but is a sound-box and horn device. As to the patentability of Hopkins direct-acting loudspeaker over the prior art sound-box and horn combinations, as to which the Third Circuit Court of Appeals said (Pamphlet, p. 57): "these threw no light upon Hopkins' problem," we refer this Court to the discussion in our brief in the *Rola case* (pp. 30-33 and 38), and particularly to the discussion by Campbell, D. J., in the *Sylo case*, and by Thacher, D. J., in the *Western Electric* case.

(c) Discussing further the decision of the Third Circuit Court of Appeals, now on the question of infringement, petitioner's counsel makes (Brief, p. 34) quite unwarranted assumptions to the effect that it was not

---

*"A patentee may be baldly empirical, seeing nothing beyond his experiments and the result; yet if he has added a new and valuable article to the world's utilities he is entitled to the rank and protection of an inventor" (*Diamond, etc., Co.* vs. *Consolidated, etc., Co.*, 220 U. S., 428, at pp. 435-436, and cases cited).

called to the attention of the Third Circuit Court in the *Brandes case* that the smaller of the plaintiff's loudspeakers had a whole diameter less than 9 inches and that the Court in arriving at its conclusion overlooked that circumstance. The drawing found opposite page 60 of the pamphlet of "Lektophone Litigation, Opinions and Decrees," was before the Third Circuit Court of Appeals in the *Brandes case,* and it illustrates the circular cone with flexible rim, the whole diameter of the cone plus the rim being 8⅞ inches as indicated on the drawing. The defense that this device because of its dimensions was outside of the patent was pressed upon the Court in brief and argument, and was the subject of expert testimony. That appears from the record in the *Brandes case* which was before the District Court in this case. Judge Morris doubtless satisfied himself of that before he held that his decision in the instant case was dictated by the decision of the Court of Appeals in the *Brandes case* (Opinion, Tr., 4).

The particular reference to the "elongated oval board" in the opinion of the Third Circuit Court of Appeals in the *Brandes case* arose from the fact that defendant there contended that its larger elongated oval sounding board was not a cone.

2. Lumiere Reproducer Not Commercial (Brief, pp. 44-45).

The second asserted error of fact in the decision of the Third Circuit Court of Appeals has to do with the commercial use of the Lumiere loudspeaker. As to it counsel says that the Court "was in error" as to the facts, probably due to the insufficiencies of the record before it." **The fact is that the evidence in this record as to the sale of these Lumiere loudspeakers is precisely the same as the evidence before the Court of Appeals with the single exception, favorable to plaintiff,**

that at the time of the trial of the Brandes case it did not appear whether the Victor Company had definitely discontinued the manufacture and sale of these devices or not. Subsequently it appeared that none were manufactured or sold after the year 1926. Thereupon the testimony as to the extent of these sales, which was taken in the *Western Electric case* and stipulated into the *Brandes case*, was again stipulated into this case with the addition to the stipulation of the words "and that none have been manufactured or sold except in the years 1925 and 1926" (Tr., 464).

3. Victor Company Using Loudspeakers Licensed Under the Hopkins Patent (Brief, pp. 45-47).

Here petitioner's counsel explains that there is evidence in this case as to why the Victor Company chose to use the loudspeakers licensed under the Hopkins patent manufactured by the General Electric Company. Whatever that reason may have been, the fact remains that the manufacture of the Lumiere loudspeaker which was begun by the Victor Company in 1925 was abandoned in 1926.

4. The Bodily Movement of the Hopkins Cone (Brief, p. 48).

The fourth asserted error of fact in the opinion of the Third Circuit Court of Appeals is said to be "that the Court was of the opinion that the Hopkins cone moved *bodily.*" **The undisputed fact is that the Hopkins cone does move bodily.** Counsel proceeds to assert that "the cone frustums of the *Fada loudspeakers do not move bodily*" (emphasis his) and consequently do not infringe. It is to be noticed that counsel does not refer to any part of the record to support that assertion.

The fact is that petitioner's counsel attempted to get petitioner's expert, Dr. Miller, to make the assertion that the cone in the petitioner's structures does not move bodily but Dr. Miller declined to do so. Testimony on the subject, reduced to narrative form, is as follows (Tr., 130-131):

> "It is not a fact that no bodily movement takes place in the Fada cone structure in operation. I should say that some bodily movement occurs. Bodily movement with the suppression or elimination of wave movement does not take place in the defendant's structure* as it is used in the reproduction of speech and music or as it is used as a radio loud speaker.
>
> CROSS-EXAMINATION.
>
> What I mean to say, is that the defendant's cone does move bodily, but the bodily movement is accompanied by wave movements in the material of the cone, wave motions which are essential to the reproduction of the sound and music."

Why counsel should permit himself to make an assertion that the testimony of his own witness so definitely repudiates, we cannot understand.

Notwithstanding the fact that his own witness denied the assertion that the cone frustums of the Fada loudspeaker do not move bodily, counsel, without referring to any supporting testimony, says that his assertion "is established by the sand patterns" (Deft.'s Exhibits 31 to 37).

---

*It is equally true that the bodily movement of the Hopkins tympanum does not take place "with the suppression or elimination of wave movement." In none of these structures is the troublesome wave movement absolutely suppressed (Tr., 178), but whenever the cone is coupled by a flexible rim to the rigid frame the troublesome wave movements are sufficiently suppressed to impress large area sound waves directly on the air without blasting.

These "sand patterns," as we have seen (ante, p. 27) **show only the relative movement of one part of the cone with respect to another part.** They cannot any more show the presence or absence of a bodily movement of the cone than a photograph of the waves on the surface of the sea can show the rising and falling of the tide. In spite of counsel's assertion, that fact cannot be denied. It was expressly admitted by petitioner's expert, Dr. Miller, who said (Tr., 148):

> "Assuming that the cone is moving in a rectilinear movement back and forth, but at the same time is vibrating or fluttering with these movements that are shown in the sand patterns, the sand pattern would not show directly whether there was a rectilinear movement, that is a movement of translation of the cone as a whole or not."

Other Points in Defendant's Brief as to Infringement.

Other contentions, on the subject of infringement, are advanced in petitioner's brief, but we think they have no reality because the only real difference in the structures is the difference in the rim. Indeed, we feel that these additional points are not worthy of the serious attention of this Court. While we do not feel justified in ignoring them, we do think that the Court might well feel justified in doing so.

Petitioner's Contention That Hopkins Patented a Sound Regenerator for Phonographs, Not for Radio (Brief, pp. 13-16).

Petitioner's counsel in his brief says (pp. 13-16) that the Hopkins patent is directed to an acoustic device "*for reproducing recorded sound from a disc phonograph rec-*

ord"* (p. 16, emphasis his), whereas petitioner's radio loudspeaker is said to be "*used in an art entirely foreign to the phonograph art*" (p. 16, emphasis his).

The Hopkins simple three-element cone type loudspeaker invented years before the advent of radio has shown its worth by this: Born in the phonograph art and first put into commercial use therein, it encountered the tremendous slump in that industry caused by the advent of radio; but it persisted into the radio industry and almost completely excluded therefrom all other types of loudspeakers.

It is hard to tell from petitioner's brief what advantage, if any, petitioner is supposed to get from this circumstance that the invention was born in the phonograph art. The patented thing is a structure, not a use, and the patentee is entitled to all of the uses to which his invention may be put, whether he knew of them or not (*Roemer* vs. *Simon, et al.*, 91 U. S., 149, at p. 157).

Suggesting that the discussion will thereby be "simplified," counsel quotes from patent 1,271,527 where the patentee mentions the regeneration of sound directly from a phonograph record, ignoring the more comprehensive language of the divisional patent 1,271,529 here in suit, chosen to bring it into accord with the scope of the original claims. A single example will be sufficient

---

*Counsel says (p. 16)—

> "Indeed, Hopkins admitted that he never contemplated its use in radio (XQ62, Rec., p. 228)."

What Hopkins testified is (Tr., 228, XQs60-62) that at the time he made his invention there was no such thing as radio, that he did not foresee the development of radio, and consequently never thought of using his device in radio unless using it for telephone purposes might be connected with that.

to illustrate this. Where patent 1,271,527 says (p. 1, lines 73 et seq., Tr., 437):

> "It is an object of the present invention to regenerate the recorded sounds directly from the record, without the interposition of a confined body of air and without the employment of a restrictive transformer, such as a horn."

The patent 1,271,529 here in suit says (p. 1, lines 67-73, Tr., 317):

> "It is the object of the present invention to regenerate the original sounds directly from the record *or other element subjected to the action of such sounds,* without interposition of a confined body of air and without the employment of a restrictive transformer, such as a horn." (Emphasis ours.)

Petitioner's Contention That the Rim and the Cone Must Be of One Piece of the Same Material (Brief, pp. 15-16; 17-18; 20; 24; 32-33).

Another point of petitioner's brief is that in the disclosure of the Hopkins patent the tympanum is "shaped from a single piece of material" (Brief, pp. 15-16; 17-18; 20; 24; 32-33). The fact is that Hopkins, when he made his invention, did not shape the paper tympanum from a single piece of material. He mounted a paper disk in the rigid annular frame, and then "glued the cone on to the flat part, and after the middle had been cut out we had a wonderful result" (Tr., 220).* Petitioner's counsel knew and understood this, as his cross examination of Hopkins expressly shows (Tr., 227, XQ53).

---

*The whole of Mr. Hopkins' statement about the genesis of his invention (Tr., 217-220) is short and very pertinent and worthy of the Court's attention.

But even if it were true, as it is not, that in the Hopkins patent the tympanum is "shaped from a single piece of material," yet such a construction of the monopoly "which would limit these words to the exact mechanism described in the patent, would be so obviously unjust that no court could be expected to adopt it" (*Hobbs* vs. *Beach*, 180 U. S., 383, at p. 400).* The patent cannot be limited to making the rim of the same material as the cone unless that was the thing that distinguished Hopkins' invention from the prior art or unless the claims are expressly so limited to something less than Hopkins' real invention.

The facts are precisely the opposite of this. The prior art, smaller sound-box and horn diaphragms were in some cases shaped from one piece of material, and in other cases had rims made from a separate piece of more flexible material (see Rola brief, p. 30).** When this came to the patentee's attention during the prosecution of his application, he **carefully amended the claims to exclude all idea that his monopoly should be limited to a rim which was an annular plane peripheral extension of the cone** (Rola brief, pp. 42-43).

---

*And see the *Paper Bag case* (210 U. S., 405, at pp. 418-419) and *United States* vs. *Anciens Etablissements* (224 U. S., 309, at p. 326).

**Whether petitioner's counsel is conscious of this we do not know, but in his discussion of these patents (Brief, pp. 35-37), there is no recognition of it. He erroneously says of the Elfering patent that it "shows a cone shaped out of one piece of vibratile sound reproducing material" whereas the Elfering patent shows a rim made of "gold beater's skin" (Tr., 521, line 65). He erroneously says that the Brown British patents "show a cone made of light vibratile sound reproducing material shaped out of one piece of material" whereas the fact is that the Brown British patents show a cone made of thin aluminum (Tr., 524, line 20) and the rim is a "thin ring of flexible material * * * of tissue paper, silk or other suitable material" (Brown British patent 29,833, Tr., 524, line 44 and 525, line 31), or "a ring of resilient material of extreme thinness,—considerably thinner than the diaphragm periphery itself" (Tr., 529, line 25) such as "glazed tissue paper one three-thousandths of an inch thick of thin collodion film" (Brown British patent 1157 of 1911, Tr., 530, line 25).

Petitioner's Contention That It Avoids Infringement by Putting Its Loudspeaker in a Cabinet (Brief, pp. 17, 29-32, 33).

On this point the Third Circuit Court of Appeals said (Pamphlet, p. 60):

> "Having thus appropriated in substance Hopkins' board and produced thereby the sounds desired, the defendant seeks to escape infringement by placing over the functioning structure an ornamental hood and thereby, as it contends, make the apparatus operate in confined air. The purpose of the hood to escape infringement by using an outward and visible form to escape an inner and duplicating substance is too clear to find lodgment in the minds of those who judge rights on the basis of substance rather than form."

The facts here are again contrary to the assertions of petitioner's counsel. Counsel says that petitioner's loudspeaker (Brief, p. 17):

> "is designed to be used, and is used in practice, within a resonance chamber or cabinet where the surrounding air is *confined* (Rec., pp. 53, 54). (Emphasis ours.)

The testimony cited not only does not say that the air is confined in petitioner's cabinet (as counsel now asserts), but explains that the cabinet is open at the front and back so that the air will not be confined. Petitioner's witness, Dr. Miller, says (Tr., 53):

> "There is this opening in front through a grill work here, but which is in effect a circular opening in [to] the interior. * * * and the removable rear part

of the cabinet, is perforated in such a way that it allows sound to come from the rear. * * *

There is no opening to the atmosphere in the top, bottom, or sides, other than the front and rear which I have mentioned."

The reference to confined air in the patent meant that there is an enclosure in which the air being operated on is surrounded by walls for a functional purpose, and by limiting his invention to "freely exposed to unconfined air" the patentee was distinguishing between a sound box construction in which the air confined in the sound box is violently vibrated to set up disturbances which are subsequently shaped by the transforming action of the horn into sound waves. This was quite clearly appreciated and was stated even in the decision of the Second Circuit Court of Appeals from which petitioner's counsel quotes on page 31 of his brief.

Petitioner's Point That Its Cone Is Truncated and the Patented Cone Is Not (Brief, pp. 17, 24-36).

Another one of petitioner's suggestions, which we would hardly think could be seriously advanced as a difference that avoids infringement, is that the cone in petitioner's loudspeaker is truncated and the patented cone is not. In some of these radio or telephone loudspeakers the cone is vibrated by a rod connected to the pivoted armature of an electromagnet, as in the Brandes loudspeaker (see drawings opposite p. 60 of the Pamphlet). In others the cone is vibrated by mounting a small cylindrical coil of wire at the apex of the cone and subjecting that coil to the variation of a magnetic field. This latter, so-called "dynamic" type of actuating means, is used by petitioner here (see drawing, Pltf.'s Ex. 5, Tr., 451, and Miller, Tr., 36 and 142). The attachment of the cylindrical form of the moving coil to the cone trun-

cates the cone, but, of course, without destroying the conical shape or altering the mode of operation of the patented combination in the slightest degree.

If this Court is disposed to give any consideration to the point at all, it should be careful not to be misled by what might appear to be an assertion at page 36 of petitioner's brief that the claims of the Hopkins patent were restricted, during the patent office proceedings, to a cone structure as differentiated from a truncated cone structure, or a frustum of a cone. Counsel quotes from an argument made by Hopkins with respect to a claim then numbered 15, which had been rejected on the patent to Kraemer. The claim under discussion included (Tr., 343, A. F. W., 1):

> "a cap of non-vibratile material rigidly secured to the apex of said conical portion of said tympanum."

The specification said (Tr., 336):

> "The cap M is applied to the tympanum to receive the shocks which are to be applied to the tympanum as a whole, and convey them to sufficient of the material of the tympanum to insure the movement of the tympanum as a whole."

The applicant pointed out, in the remarks quoted by petitioner's counsel at page 36 of his brief, that this element of the claim was not met by the small metal plate 16 secured in the Kraemer patent to the center of a flat surface at the top of Kraemer's truncated cone because (Tr., 361):

> "With a diaphragm of this kind, the center will yield and produce local disturbances."

This metal cap element of the combination is not included in any of the claims here sued on, and the re-

marks quoted by counsel are utterly irrelevant to the present discussion.

Petitioner's Contention That Its Structure Does Not Have the Cone Altitude of Claims 3, 6 and 7 of the Patent.

Another trivial point advanced by petitioner's counsel (Brief, p. 24) is that the altitude of the cone in petitioner's structures is not "substantially one-quarter of the diameter of its base," as recited in claims 3, 6 and 7. The patent specification on which these claims are based says (pat., p. 2, lines 94-96):

> "The altitude of the conical portion *l'* should be at least one-quarter of the diameter of its base."

Petitioner's expert agreed under cross examination (Tr., 131) that the altitude of the cone in defendant's structures is "at least one-quarter of the diameter of its base" and so "complies with the statement of the patent."

Petitioner's Contention That Claims 4 and 8 Are, in Fact, Limited to the Minimum Dimensions Expressly Stated in Claims 1, 2, 3, 5, 6 and 7, Irrespective of Whether or Not Those Dimensions Are Numerically Expressed in the Claims.

We have discussed this subject fully in our brief in the *Rola case*, where we have traced the true nature of the advance that Hopkins made over the prior art[1] and the true mode of operation of his new combination[2] and of defendant's equivalent structure[3]; and have shown

---

[1] *Rola* brief, pages 21-36.

[2] *Rola* brief, pages 14-16.

[3] *Rola* brief, pages 18-21 and 63-65.

how the Rola loudspeaker, which corresponds in size to petitioner's smaller loudspeaker, is merely a colorable departure from the recommended dimensions of the patent. And we have pointed out above (*ante*, p. 6) that the larger of petitioner's loudspeakers does not even make that colorable departure from the disclosure.

We have also stated in that brief our position with respect to petitioner's contention that defendant's smaller structure is excluded from the monopoly by the disclosure of the specification and the patent office proceedings.*

Petitioner's counsel, in the instant case, supports the proposed limitation of the claims by the assertion that the literal extension of the whole diameter of the tympanum to nine inches is an essential of the invention, citing (pp. 25-28) the decision of the Second Circuit Court of Appeals in the *Sylo case* and the decision of Hickenlooper, D. J., in the *Crosley case* to reinforce the decision of Judge Bourquin and that of the Ninth Circuit Court of Appeals in the *Rola case*.

The Second Circuit Court of Appeals did not put any interpretation on the patent that would exclude petitioner's structures, as is evidenced, we think, by the fact that Galston, D. J., since that decision has in the *Colonial case* in the District Court in Brooklyn held the patent infringed by a larger loudspeaker precisely like petitioner's (see *post*, p. 51).

Judge Hickenlooper did not in the *Crosley case* put any interpretation on the patent that would exclude petitioner's structures. Indeed, he said (pamphlet, p. 71):

> "The loose rubber ring of Brandes may be such equivalent * * * *" (see *post*, p. 52).

---

*Rola brief, pages 40-51.

Argumentatively counsel repeats again and again the assertion that (a) "a tympanum in excess of 9 inches in diameter is the *essential* characteristic of the Hopkins invention" (p. 28) and (b) "The patent states that this result can be secured *only* if a tympanum exceeding 9 inches in diameter is employed" (p. 28).

But neither of those assertions is true.

(a) The essential characteristic of the Hopkins invention is a light stiff paper cone, of sufficient area to directly create the sound waves in air without the interposition of a soundbox and horn, coupled by a flexible rim to a rigid frame; and

(b) what the patent states is that "If satisfactory regeneration of sounds * * * is to be had, the whole diameter of the tympanum * * * should exceed nine inches," although "it is, of course, possible to make some variation from the approximate sizes given without materially altering the result; but if the tympanum is constructed as shown in the drawing, any great variation from these proportions will be found to affect the character of the reproduction."

There is no doubt that size is of the essence of Hopkins' invention in its differentiation from the sound-box horn devices of the prior art. The diaphragms of those devices were of the order of magnitude of one inch in diameter.

After Hopkins, in his experimental work, had dispaired of producing a satisfactory loudspeaker of the sound-box and horn type, and after he had experimented with sounding-boards of the piano, guitar and zither type and found them too heavy (Tr., 218-219); he may, looking back upon his experimental work, be said to have thrown away the horn and opened up the sound-box to expose the diaphragm to unconfined air. But these small diaphragms would not, when exposed to unconfined air,

achieve his purpose because they reproduced effectively only the high frequency notes (Miller, Tr., 137 and 139; Farrand, Tr., 169-171 and 173; Hopkins, Tr., 231). He found by extended experiments that in order to get a reproduction of sound with the even balance that the art demands, the diaphragm had to be enlarged to the dimensions set forth in his specification, not rigidly as the essence of his invention but enlighteningly as the size necessary to get the proper quality of reproduction.

Throughout the prosecution of his application Hopkins repeated that in a loudspeaker acting directly on unconfined air, as distinguished from the sound-box and horn combination, **substantially** this size is necessary in order to get satisfactory results (see *Rola* brief, pp. 51-63), and the Patent Office Examiner said (A. F. W., 20):

> "The Examiner understands * * * that the base diameter must be substantially nine inches in order that satisfactory results can be obtained."

Although Hopkins included in some of his claims the literal limitation to nine inches, he insisted on other claims not so limited. **It could only have been in contemplation of possible equivalents that he insisted upon, and the Examiner allowed, the claims of broader phraseology.**

But even if the claims were all limited in terms as claims 1, 2, 3, 5, 6 and 7 are limited (and claims 4 and 8 are not) still we think the Court would find infringement* because petitioner has in fact paid the tribute of imitation to Hopkins' recommended size of the active conical sound-producing portion of the tympanum, and

---

*Although in the instant case petitioner does actually employ a cone of the full area that Hopkins recommended yet the law is that it is not necessary that a defendant should employ the plaintiff's invention to as good advantage as he employed it or that the result should be the same in degree; but it must be the same in kind (*Winans* vs. *Denmead*, 15 How., 330, at p. 344; *Sewall* vs. *Jones*, 91 U. S., 171, at pp. 183-4; and *King Ax Co.* vs. *Hubbard*, C. C. A., 6, 97 Fed., 796).

has achieved an insignificant reduction of the whole diameter of the tympanum also in accordance with the principles of Hopkins' invention by making the narrower rim of more flexible material.

Petitioner has not used the small conical diaphragm of the sound-box and horn art, or anything like it. Its cone having a diameter of seven inches is forty-nine times as large as the customary size of cone used in the sound-box and horn combination, and it effectively acts upon unconfined air to directly create the sound waves without the interposition of a sound-box and horn.

Under the heading "The Limitation of Size" (Brief, pp. 38-40), counsel carries his argument to the assertion that:

> "the patent is wholly invalid because of his [Hopkins'] fraudulent misrepresentation as to the *essence* of his invention." (Emphasis his.)

To support this charge of fraudulent misrepresentation by the patentee, counsel quoted certain testimony given by the patentee in the *Western Electric* case and read to him in the instant case (Brief, pp. 38-39), and counsel says:

> "* * * he adopted it, with slight modification, in the present case."

The idea that counsel seek to convey by this is that the statement in the patent was inserted by the patentee, after the rejection of his original claim and as a prerequisite to the final allowance of the claims; that the limitation was a purely arbitrary one without real significance, and that for this reason the patent is invalid.

The fact is that what is said in the patent specification about size was in the specification when it was orig-

inally filed in 1913 (Tr., 333). The "slight modification" in Hopkins' testimony, as counsel characterize it, was a complete repudiation of the idea counsel seeks to convey (Tr., 245-246); and the minimum dimension of the cone recommended by Hopkins in his original specification is shown by this record, and by petitioner's adoption of it, to be in fact a minimum below which the high-frequency and the low-frequency sounds will not be reproduced in even balance.

When Mr. Hopkins was asked by petitioner's counsel why he included this statement as to size in the specification, he said (Tr., 238, XQ113):

> "* * * It was an earnest desire of ours to make a disclosure of the best type of device that we knew how to do at that time."

And (Tr., 242, XQ129):

> "Yes. I told you that below nine inches by careful experiment we found that the efficiency in the bass ranges was falling off and that we did not believe—that is, nine inches was a rather rough way of putting it—I mean it was a zone there of that size, and below that the basses were not reproduced in what we considered the full amplitude to match the rest of the sound gamut."*

When Hopkins tried to explain, in answer to a question from the Court, why a tympanum having a whole diameter not less than nine inches functions better in the reproduction of sound than one less than nine inches in diameter, he was stopped by petitioner's counsel (Tr., 241-242); but on re-direct examination the subject was resumed, and he said (Tr., 274, RDQ300):

---

*And see Tr., 243, XQ136; Tr., 247, XQ155; Tr., 248, XQ156 and Tr., 220-221.

> "Unless you made it that—unless you made it that size, it would not play efficiently the proper quantity of bass to go with the other frequencies to complete the gamut."

And (Tr., 275, RDQ302):

> "* * * We had discovered by experiments that anything smaller than, roughly this minimum size of the structure that we gave in the specification, would not play the bass end of the sound spectrum of a musical range that we were after—"

and (Tr., 276, RDQ305):

> "It is the point where the effective combination of the bass waves becomes noticeable in falling off."

And at pages 282-283, he explained that the basses progressively fall off as the size is diminished and progressively increases as the size is enlarged. The size he recommended is critical only in the sense that below that size the balance of tones is not up to the quality that the art demands (Tr., 220 and 240).

That this balance of sound reproduction over the whole gamut is necessary, and that it has been the continuous effort of builders of such devices to attain it, is testified to by petitioner's expert, Miller (Tr., 132-133, and see respondent's expert, Farrand, Tr., 214).

Petitioner's Misleading Review of Previous Litigation (Brief, pp. 3-6).

Petitioner's discussion of previous litigation is so confused with irrelevant discussion of the "parent Hopkins patent" 1,271,527, not here involved, that it is hard to follow. Stripping it of this irrelevant matter

we find the discussion summarized in two assertions (p. 6):

(a) That the patent "has, either directly or by inference, been held to be invalid by the New Jersey, Ohio and California District Courts and the Ninth Circuit Court of Appeals."

The only Court that has ever held the patent invalid in this country or abroad is the District Court of New Jersey (*Bodine, D. J.*) which, in the *Brandes case*, held the patent directly anticipated by Lumiere. This was reversed by the Third Circuit Court of Appeals. The Ohio District Court (Hickenlooper, D. J.) expressly accepted the conclusions of validity of the two District Courts of New York and the Third Circuit Court of Appeals (Pamphlet, p. 62). The California District Court (*Bourquin, D. J.*) said (Pamphlet, p. 81):

> "the issue of validity need not be and is not determined."

The Ninth Circuit Court of Appeals (Pamphlet, p. 105) found it

> "unnecessary to pass upon the validity of the patent"

(b) That the patent has "been held, if valid, to be so limited as to be not infringed by a structure substantially the same as petitioner's by the District Court of the Southern District of New York, New Jersey, Ohio and California, and by the Circuit Courts of Appeals of the Second and Ninth Circuits."

The New Jersey decision referred to is the reversed decision of Judge Bodine in the *Brandes case*, and the

decisions in the District Court of California and in the Ninth Circuit Court of Appeals are the decisions in the *Rola case* now before this Court.

It is utterly misleading for counsel to say that the structures involved in the Western Electric case (Southern District of New York and the Second Circuit Court of Appeals) and in the Crosley case (Ohio District Court) are "substantially the same as petitioner's."

Judge Thacher and the Second Circuit Court of Appeals excluded the double cone Western Electric loudspeaker* from the scope of Hopkins' patent, but only because **it was held** on the evidence in that record **that the different structure of the double cone Western Electric arrangement,** as compared with the single cone structure like Hopkins or petitioner's here, **resulted in a different mode of operation.****

None of the things said by the courts about the Western Electric device can be said about petitioner's devices. It cannot be said of them that it is not the outer edge of the tympanum (cone plus rim) that is mounted in the annular support, or that the annular rim does not encircle the conical portion of the tympanum, or that the cone is not freely exposed to unconfined air. Nor is there doubt that in petitioner's device the flexible annular rim serves as a hinge permitting bodily movement of the cone, like the patented device, and unlike the mode of operation which those courts found in the Western Electric structure. Nor is there in petitioner's device any such confined air chamber formed between a front cone and a rear cone frustum, as was present in the Western Electric structure.

---

*See drawing, Pamphlet, opp. page 443.

**See Judge Thacher's opinion, Pamphlet, pages 35-37; the opinion of the Second Circuit Court of Appeals in the *Sylo case*, Pamphlet, pages 23-4; and the opinion of the Second Circuit Court of Appeals in the *Western Electric case*, Pamphlet, pages 39-42.

Petitioner's counsel couple their erroneous assertion that the Western Electric device is "substantially the same as petitioner's" with the suggestion that when Galston, D. J., in the Eastern District of New York recently decided the *Colonial case*,* he "ignored" the decision in the Ninth Circuit and also the opinions of his own Court of Appeals in the *Sylo* and *Western Electric cases* (footnote, brief, p. 6). We do not think that the District Court Judges ignore the decisions of their own Courts of Appeals. Certainly Judge Galston did not. It is clear from Judge Galston's opinion that he differed from the Ninth Circuit Court of Appeals fundamentally and agreed with the Third Circuit Court of Appeals, from whose opinion he quotes (Pamphlet, pp. 120-1). He twice refers in his opinion to the decisions of his own Court of Appeals in the *Sylo* and *Western Electric cases* (Pamphlet, pp. 113-120), and he also comments upon the decision in the Sixth Circuit (Pamphlet, p. 121). The fact of the matter is that Judge Galston recognized, as we think any intelligent person must do, that the question of infringement in the *Western Electric case* was very different from the question of infringement by the Colonial loudspeaker, which is identical with petitioner's loudspeaker. His decision was not written in ignorance of the earlier decisions of his own Court of Appeals, but with intelligent recognition that the validity affirmed by the earlier decisions in his circuit clearly embraces a monopoly inclusive of petitioner's structure here.

The remark of petitioner's counsel that the device involved in the Crosley case is "substantially the same as petitioner's" is about as far from the truth as the same statement is with respect to the device involved in the Western Electric case.

Lektophone Corp. vs. *Colonial, etc., Corp.*, Pamphlet, page 112.

In the Crosley loud speaker (see drawing opposite p. 72 of the pamphlet) the peripheral edge of the cone was nested between felt rings supported by a metal frame. Defendant's position was that the cone had no flexible rim and so avoided infringement. Judge Hickenlooper agreed with defendant saying (Pamphlet, p. 73):

> "So long as the defendant's means of accomplishing the desired result is not merely the substitution of the mechanical equivalent for that of Hopkins, there can be no infringement.
>
> Limited and narrowed as we find the claims of Hopkins must be, and different in nature, function and operation as we understand the felt channel at the base of the cone of the defendant to be, from the annular rim of Hopkins, we are constrained to hold that, conceding the validity of the complainant's patents (not re-examined and upon which we give no opinion), there has here been no infringement."

And (Pamphlet, p. 71)

> "We therefore hold that by the prior art, by the claims as drawn, by the essence and exact nature of the invention as disclosed, and by the estoppel created in the Patent Office proceedings, the patentee here is limited to a diaphragm having the annular rim, rigidly held, and to a comparatively narrow range of equivalents. *The loose rubber ring of Brandes may be such equivalent* but the total absence of any annulus cannot be so considered." (Emphasis ours.)

CONCLUSION.

We therefore submit that the Hopkins patent is valid; that it is infringed by petitioner's structures; and that this Court should direct the Third Circuit Court of Appeals to affirm the judgment of the District Court for the District of Delaware.

Respectfully submitted,

WILLIAM H. DAVIS,
of Counsel.

Dated, New York, N. Y.,
October 21, 1930.

SUPREME COURT OF THE UNITED STATES.

Nos. 19 and 68.—October Term, 1930.

19	Lektophone Corporation, *vs.* The Rola Company.	On Writ of Certiorari to the United States Circuit Court of Appeals for the Ninth Circuit.
68	Miller Brothers Company, *vs.* Lektophone Corporation.	On Writ of Certiorari to the United States Circuit Court of Appeals for the Third Circuit.

[December 8, 1930.]

Mr. Justice Holmes delivered the opinion of the Court.

These are two suits brought by the Lektophone Corporation alleging the infringement of a patent. In the first named, No. 19, in the Ninth Circuit, the decision was for the defendant, 34 F. (2d) 764, affirming the decree of the District Court, 27 F. (2d) 758, and declining to follow the Third Circuit's decision in *Lektophone Corporation* v. *Brandes Products Corporation*, 20 F. (2d) 155. A writ of certiorari was granted by this Court, 280 U. S. 551. Later, the second of the suits before us, No. 68, was brought in the Third Circuit, and the District Court, in obedience to the precedent there, decided for the plaintiff, 37 F. (2d) 580. An appeal was taken to the Circuit Court of Appeals. A writ of certiorari was granted by this Court without the formality of awaiting the result. 281 U. S. 713.

The patent is No. 1,271,529, granted July 2, 1918, to Hopkins, assignor, by mesne assignments, to the Lektophone Corporation; the original application having been filed July 14, 1913, in the time of the phonograph and before the days of radio, for an "Improvement in Acoustic Devices." The object is the "direct propagation, in free air, from a record or equivalent element subjected to the action of the original sound waves or vibrations, of self-

sustaining sound waves substantially corresponding in intensity and amplitude, as well as in pitch or timbre, to the said original sound waves": as distinguished from the then prevailing use of the sound box and horn. The device, as set forth in claim 8, comprised "a tympanum embodying a bodily movable, central conical portion, and an annular rim which encircles said conical portion and which is rigidly supported, said conical portion being freely exposed on all sides to unconfined air and being of sufficient area to produce self-sustaining sound waves in the surrounding air when vibrated." On the question what is a sufficient area the patent says, "If satisfactory regeneration by sounds from a record or other sound-vibrated element is to be had, the whole diameter of the tympanum, that is, the diameter of the aperture in the rings [that rigidly clamp the edges of the tympanum] should exceed nine inches." "The diameter of the base of said conical portion should be at least eight-tenths of the diameter of the said aperture" —with further details. Paper is pronounced a satisfactory material, the requirement being that it should be crisp and strong and have considerable rigidity within itself.

The state of the art at and before 1913 will be found in the cases already cited, two excellent discussions by Thacher, D. J., in *Lektophone Corporation* v. *Western Electric Co.*, 20 F. (2d) 150 and Hickenlooper, D. J., in *Lektophone Corporation* v. *Crosley Radio Corporation*, Southern District of Ohio, not reported, and in the English case of *Lektophone Corporation* v. *S. G. Brown, Ltd.*, Ch. Div., January 23, 1929; Court of Appeals, July 12, 1929. It is unnecessary to repeat, because it is conceded that the conical tympanum and material were known in connection with a sound box for the phonograph of which Hopkins was thinking, as shown by the words 'from a record' quoted from the patent. The effect of increasing the size of the cone also was known. The contribution of Hopkins, if he made one, as held in several cases in the lower Courts and abroad, was to combine abandoning the sound box, determining the size of the cone deemed by him most suitable to reproduce the sounds communicated to it by vibration, and tightly gripping and rigidly supporting the outer edge of the cone between two rings. A result claimed for the rigid support, although seemingly not thought of at the time, is to avoid interfering sounds, 'blasting' and rattling, that were made when the edge of the cone was loose. As said by Hickenlooper, J., "All of these elements in

combination went to make up the novelty of his alleged invention." "To the size, shape and proportion thus disclosed the patentee is limited by the prior art and the very essence of his invention." If the patent was valid it must be confined narrowly to the combination described.

In No. 19 the defendant's device is very like that of the plaintiff but differs in at least one particular. The plaintiff's cone, of crisp, strong, more or less rigid material, is continued in one piece under the rings that give it a rigid support. Its tympanum includes this outer edge. On the other hand, as said by Judge Thacher about another contrivance, "the defendant's structure, although it comprises a tympanum support having a circular aperture, does not comprise a tympanum having its outer edge rigidly mounted on said support in said aperture within the meaning of claim 4. Nor does it comprise an annular rim which encircles the conical portion of the tympanum within the meaning of claim 8." *Lektophone Corporation* v. *Western Electric Co.*, 20 F. (2d) 150, 154. The defendant's tympanum is only the paper cone, distinct from the rim. The rim is made of limp leather. In view of the importance attached to this element in the plaintiff's patent it is impossible to say that it is infringed. To quote again from the last cited case, "to hold that the defendant's device comprises 'a tympanum rigidly supported at its periphery' within the meaning of the claims is to construe the claims contrary to the plain import of their terms;" and the Judge refers to experiments that showed the difference in function of the two devices. *Ibid.* There are other questions that would have to be answered before the plaintiff could prevail, such as the difference in size, argued in this case, 27 F. (2d) 758, 760; s. c. on appeal, 34 F. (2d) 764, 773; the size being regarded by Hopkins as of the essence of his invention. But we think the matter too plain to need more words. The same conclusion applies to the second case where the rim is made of cloth.

Decree in No. 19 affirmed.
Decree in No. 68 reversed.

The CHIEF Justice took no part in the decision of these cases.

A true copy.

Test:

Clerk, Supreme Court, U. S.